Panasonic
BUSINESS

General Catalogue

2020 — 2021

The world of heating and cooling is changing with Panasonic

heating & cooling solutions

AQUAREA

Aquarea is a ground breaking low energy system for heating and domestic hot water production: delivering outstanding performance, even at extreme outdoor temperatures.

Aquarea J generation R32.

Aquarea is now available in R32, making Aquarea excellent choice for those who really care the environment. Aquarea J Series, the new generation designed for R32 refrigerant.

Aquarea Service Cloud for professionals.

Aquarea Service Cloud will activate remote maintenance service while end user is controlling and monitoring its heating and DHW remotely.

New Aquarea All in One Compact.

The Aquarea All in One Compact unit is the ultimate space-saving solution. Its 598 x 600 mm footprint, standard size of other big appliances, reduces the space required for the installation.

New residential heat recovery solution.

Ventilation systems with heat recovery offer users a high degree of living comfort thanks to temperature controlled and clean air. Heat recovery units in combination with Aquarea heat pump are the ideal solution.

DOMESTIC

Panasonic has developed a range of domestic products designed for you and your clients.

Cleaning the air we breathe.

Panasonic systems are equipping different technologies to clean the air. Anti allergy nanoe™ X and PM2,5 filters are some examples to take care of the air we breathe.

nanoeX

Easy installation and servicing.

Intelligently designed for quick and simple installation, the new models are lighter, smaller and stronger than ever.

New super-compact units.

The new super-compact wall-mounted units measure a mere 779 mm, ideal for installations in narrow spaces or above the door. The updated, elegant design is suitable for all types of interiors.

Voice Control.

Control without boundaries and get hands-free help to fully access the features of your air conditioners. Maximising your cooling comfort is now a breeze with our Network-Enabled Air Conditioners with Panasonic's Comfort Cloud and Voice Control.

COMMERCIAL

The commercial range is constantly expanding so that you can always offer your clients the optimal solutions: high performance, silent machines and a complete range of ducts, cassettes and ceiling installations.

Panasonic PACi R32 up to 25,0 kW.

Panasonic PACi provides a wide range of heating & cooling solutions with R32 refrigerant from 3,6 to 25,0 kW. From residential to commercial applications, it's the low GWP solution.

R32 Big PACi with a Split-able Hide Away indoor.

New Hide Away indoor. The new light weight and compact body design can be split into 3 components, providing simplified installation within a space with narrow access.

New wired remote controller.

Panasonic has developed the new wired remote controller to meet the modern control needs. The controller provides great accessibility and convenient tools in a stylish design.

Highly-Efficient Water Heat Exchanger for PACi series.

Providing not only an efficient operation with A++ Energy efficiency class*, but also 2 installation configurations (Wall-mounted and Floor-standing) meeting the needs of various spaces.

* Scale from A+++ to D.

VRF SYSTEMS

The VRF industrial range considerably improves efficiency so even large buildings can benefit from a high-level of comfort with less energy consumption.

VRF Systems ECOi EX.

A game-changing VRF system delivering outstanding energy saving performance. Taking quality to the extreme -that's the challenge by Panasonic.

ECO G 3 Series. + GHP/EHP Hybrid system.

Upgraded Gas Driven VRF - ECO G 3 Series. 3-Pipe ECO G GF3 provides free hot water effectively using waste heat generated by heating and cooling.
Let's also take an advantage of Gas and Electricity with GHP/EHP Hybrid solution.

Mini ECOi LE Series.

The Mini ECOi combines smartly compact body with high specifications. It delivers high levels of energy-saving, powerful operation, reliability and comfort.

VRF Smart Connectivity+.

Panasonic's VRF Smart Connectivity is a completely new, state-of-the-art solution providing energy saving and comfort as well as simple installation, operation and running.

CHILLER

Panasonic introduces the new ECOi-W heat pump chiller series. This new series provides a wide variety of HVAC system solutions, to meet all of your residential, commercial and industrial needs.

ECOi-W, the solution for hotels, offices and industry.

High seasonal efficiency with the line-up from 20 kW to 210 kW.
Fully customisable design gives high flexibility for commercial applications.

BMS integration.

Modbus RTU is included as standard in full range and additional optional BMS connection by Modbus and BACnet is also available.

Quiet operation in full range.

The full range provides very low noise operation thanks to the compressor phonic insulation. The level of quiet operation is outstanding in the market.

Simple user friendly control.

A control panel with intuitive design is equipped on all ECOi-W systems as standard.

REFRIGERATION

Panasonic condensing units with natural refrigerant.
Panasonic is now introducing the environmentally friendly CO_2 condensing units for commercial refrigeration.

Natural refrigerant CO_2.

CO_2 is a very attractive refrigerant from an environmental perspective.
Zero ODP and "GWP" (Global Warming Potential) =1 means natural substance in the atmosphere.

New line-up 7,5 kW MT Type.

Medium temperature operation (evaporation temperature set point range -20 ~ -5 °C). Maximum cooling capacity: 7,4 kW* (ET -10 °C AT 32°). Slim & light unit with 1 fan. Heat Recovery port available.

CO_2 Condensing units CR Series by trusted technology.

CR Series are made in Japan with an excellent quality control established by skilled factory team.

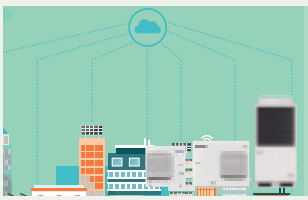

Modbus compatibility with monitoring system.

Panasonic CO_2 condensing units can be supervised by major monitoring system such as CAREL, Eliwell and Danfoss.

EDITORIAL

6 A DESIRE TO CREATE THINGS OF VALUE
8 A GLOBALLY TRUSTED AIR CONDITIONING BRAND
10 100 % PANASONIC, THE DNA OF JAPANESE CRAFTSMANSHIP
12 NANOE™ X - PANASONIC UNIQUE TECHNOLOGY TO IMPROVE INDOOR AIR QUALITY
14 PANASONIC: ECO & SMART IDEAS FOR A SUSTAINABLE LIFESTYLE
16 PROJECTS & CASE STUDIES OF PANASONIC HEATING AND COOLING SOLUTIONS
18 PRO CLUB. THE PROFESSIONAL WEBSITE OF PANASONIC

AQUAREA

20 WELCOME TO AQUAREA AIR TO WATER HEAT PUMP
22 HIGHLIGHTED FEATURES
24 INTRODUCING THE PANASONIC AQUAREA – AIR SOURCE HEAT PUMP
26 AQUAREA HEAT PUMP LINE-UP
28 AQUAREA, TOP-LEVEL EFFICIENCY ACROSS THE BOARD
30 AQUAREA ALL IN ONE
32 AQUAREA HIGH PERFORMANCE
34 AQUAREA T-CAP
36 AQUAREA HT
38 AQUAREA COMMERCIAL
40 AQUAREA SMART CLOUD FOR END USERS
41 AQUAREA SERVICE CLOUD FOR INSTALLERS / MAINTENANCE
42 CONTROL AND CONNECTIVITY
43 AQUAREA + PV PANELS
44 PANASONIC PRO CLUB MAKES YOUR LIFE EASIER. ALL AQUAREA DESIGN TOOLS CAN BE FOUND THERE
45 AQUAREA DESIGN TOOLS
46 AQUAREA HEAT PUMPS LINE-UP
64 SMART FAN COILS
65 FAN COILS
66 SANITARY TANKS
68 HEAT RECOVERY VENTILATION UNIT
70 DHW STAND ALONE
72 ACCESSORIES AND CONTROL
74 HEATING & COOLING CAPACITY TABLES
85 EXAMPLES OF INSTALLATIONS

DOMESTIC

86 WELCOME TO DOMESTIC RANGE
88 HIGHLIGHTED FEATURES
90 NANOE™ X. QUALITY AIR FOR LIFE
92 ETHEREA STYLISH AND OUTSTANDING FEATURES
94 HEATCHARGE. ENERGY CHARGE SYSTEM
96 NEW WALL-MOUNTED TZ SUPER-COMPACT
98 NEW, SUPER-COMPACT UNITS, REDESIGNED FOR SIMPLE INSTALLATION AND MAINTENANCE
100 FLOOR CONSOLE. EFFICIENT COMFORT AND CLEAN AIR ALL YEAR ROUND
102 PANASONIC R2 ROTARY COMPRESSOR
104 R22 RENEWAL. PANASONIC STANDARD UNITS CAN BE INSTALLED ON EXISTING R22 PIPINGS
106 COMFORT CLOUD APPLICATION. CONVENIENT CENTRALISED CONTROL
108 NEW VOICE CONTROL. WORDS DO MORE THAN ACTIONS
110 CONTROL AND CONNECTIVITY
112 DOMESTIC AIR CONDITIONER RANGE R32
122 MULTI SPLIT AND FREE MULTI SYSTEM
128 FEATURE COMPARISON
130 FEATURES EXPLAINED
131 ACCESSORIES AND CONTROL
133 FREE MULTI R32 COMBINATIONS TABLE

COMMERCIAL

150 PANASONIC COMMERCIAL AIR TO AIR
152 HIGHLIGHTED FEATURES
154 PACi OUTDOOR UNITS. ENERGY SAVING CONCEPT
156 PACi ELITE: EXCELLENT SEER AND SCOP VALUES
158 GENERATION PACi 90X90 CASSETTE
160 SOLUTIONS FOR 24/7/365 APPLICATIONS
162 RANGE OF COMMERCIAL UNITS R32
190 PACi SINGLE, TWIN, TRIPLE AND DOUBLE-TWIN SYSTEM
196 PRO-HT TANK SERIES FOR PACi
198 PACi WITH WATER HEAT EXCHANGER · R32 REFRIGERANT
202 PANASONIC VENTILATION SOLUTIONS
203 ELECTRIC AIR CURTAIN
204 AIR HANDLING UNIT KIT 3,6-25,0 KW FOR PACi
206 AIR CURTAIN WITH DX COIL, CONNECTED TO THE VRF OR PACi SYSTEMS.
208 PANASONIC PACi ELITE CAN COOL ROOMS DOWN TO 8 °C
210 R22 RENEWAL. FAST, EASY TO INSTALL AND COST EFFECTIVE
214 ACCESSORIES AND CONTROL

VRF SYSTEMS

216 COMMERCIAL VRF SYSTEMS
218 VRF HIGHLIGHTED FEATURES
220 PANASONIC: DELIVERING TOP ENERGY EFFICIENCIES FOR MANY YEARS
222 PANASONIC VRF: TOP IN COMFORT
224 SOLUTIONS FOR RESTAURANTS
226 YOUR ENTIRE HOTEL WITH SUPERIOR COMFORT, CONTROL AND SAVINGS TOO
228 INNOVATIVE SOLUTIONS FOR RETAIL
230 RANGE OF VRF OUTDOOR UNITS
232 BEST EFFICIENCY ECOi SERIES FROM PANASONIC
234 MINI ECOi LE SERIES FOR LIGHT COMMERCIAL & RESIDENTIAL USE
240 ECOi EX THE GAME CHANGER
262 EUROVENT CERTIFIED TECHNICAL DATA
264 ECO G, THE GAS DRIVEN VRF
274 PANASONIC GHP/EHP HYBRID SYSTEM
278 WATER HEAT EXCHANGER FOR HYDRONIC APPLICATIONS
282 LEAK DETECTION AND AUTOMATIC REFRIGERANT PUMP DOWN
283 DESIGN SUPPORT SOFTWARE FOR VRF
284 VRF SYSTEMS INDOOR UNITS
286 ECOi AND ECO G SYSTEMS INDOOR UNITS RANGE
304 PRO-HT TANK SERIES FOR ECOi
306 SMART FAN COILS
307 FAN COILS
308 PANASONIC VENTILATION SOLUTIONS
310 AHU CONNECTION KIT 16, 28 AND 56 KW FOR ECOi AND ECO G
312 AIR CURTAIN WITH DX COIL, CONNECTED TO THE VRF OR PACi SYSTEMS
314 ENERGY RECOVERY VENTILATION
316 HEAT RECOVERY WITH DX COIL
318 DIMENSIONS AND TUBE SIZES OF BRANCHES AND HEADERS
322 ACCESSORIES AND CONTROL

CONTROL AND CONNECTIVITY

326 CONTROL AND CONNECTIVITY
328 VRF SMART CONNECTIVITY+
334 PANASONIC AC SMART CLOUD
336 COMMERCIAL WLAN ADAPTOR
338 NEW WIRED REMOTE CONTROLLER - CZ-RTC6 / CZ-RTC6BL / CZ-RTC6BLW
340 REMOTE CONTROLLER WITH ECONAVI
342 DATANAVI
344 INTELLIGENT CONTROLLER
346 ECONAVI SENSOR
348 CONTROLLER FOR HOTEL APPLICATION
350 BMS INTERFACE WITH P-LINK
352 CONTROL AND CONNECTIVITY
354 INDIVIDUAL CONTROLLERS
357 CENTRALISED CONTROLLERS
362 PACi AND VRF CONTROL AND CONNECTIVITY
364 ECOi, ECO G AND PACi CONNECTIVITY INDOOR UNITS

HEAT PUMP CHILLERS

366 DISCOVER A NEW ERA OF ECOi, THE ECOi-W. HEAT PUMP CHILLERS
368 ECOi-W MEETS THE CUSTOMER'S NEEDS, WITH THIS FULLY CUSTOMISABLE HEAT PUMP CHILLER
370 ECOi-W, THE SOLUTION FOR HOTELS, OFFICES AND INDUSTRY
372 PANASONIC CERTIFIED QUALITY
374 RANGE OF ECOi-W OUTDOOR UNITS
384 CONTROL
385 FAN COILS APPLICATION WITH ECOi-W HEAT PUMP CHILLER SYSTEM
386 MODEL REFERENCING AND OPTIONS

REFRIGERATION

388 PANASONIC CONDENSING UNITS WITH NATURAL REFRIGERANT
390 CHOOSE THE GREEN SOLUTION BY PANASONIC
392 NATURAL SOLUTION WITH HIGH ENERGY SAVING
394 CO_2 TRANSCRITICAL CONDENSING UNITS CR SERIES
396 TECHNOLOGY BY PANASONIC
398 RANGE OF CO_2 CONDENSING UNITS CR SERIES

400 DIMENSIONS

450 WIRING DIAGRAMS

CE

EUROVENT CERTIFIED PERFORMANCE
www.eurovent-certification.com

Quality Management System Certificate

Certified to ISO 9001: 2008
Panasonic Appliances Air-Conditioning Malaysia. Sdn.Bhd.
Cert. No.: MY-AR 1010

Certified to ISO 9001: 2008
Panasonic Appliances Air-Conditioning (GuangZhou) Co., Ltd.
Registration Number: 01209Q20645R5L

Environmental Management System Certificate

Certified to ISO 14001: 2004
Panasonic Appliances Air-Conditioning Malaysia Sdn.Bhd.
Cert. No.: MY-ER0112

Certified to ISO 14001: 2004
Panasonic Appliances Air-Conditioning (GuangZhou) Co., Ltd.
Registration Number: 02110E10562R4L

A desire to create things of value

"Recognising our responsibilities as industrialists, we will devote ourselves to the progress and development of society and the well-being of people through our business activities, thereby enhancing the quality of life throughout the world."

Panasonic Corporation's Basic Management Objective, formulated in 1929 by the company's founder, Konosuke Matsushita.

1958

First room air conditioner launched for domestic installation.

1971

Starts production of absorption chillers.

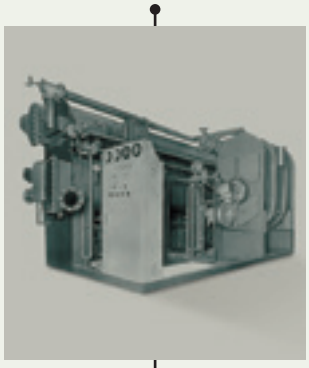

1973

Panasonic launches the first highly efficient air-to-water heat pump in Japan.

1975

Panasonic becomes the first Japanese air conditioner manufacturer in Europe.

1985

Introduces first GHP (gas heat pump) VRF air conditioner.

1989

Introduces world's first simultaneous 3-Pipe heating/cooling VRF System.

2008

World's first air conditioner equipped with nanoe™

Etherea new concept: high efficiency and high performances with a great design.

2010

New Aquarea. Panasonic introduces Aquarea, an innovative new, low-energy system in Europe.

2012

New Panasonic GHP units. The gas-driven VRF Systems are ideal for projects where power restrictions apply.

2015

CO_2 condensing units in Europe.
The ideal solution for supermarkets, shops and gas stations.

2016

New VRF Systems ECOi EX with extraordinary energy-saving performance.

2018

The first Hybrid System with VRF and GHP in Europe.

Looking ahead

Panasonic introduces a new Heat Pump Chiller series which is named as ECOi-W.

A Globally Trusted Air Conditioning Brand

Panasonic – leading the way in Heating and Cooling. With more than 50 years of experience, selling to more than 120 countries around the world, Panasonic is one of the leaders in the heating and cooling sector.

With a diverse network of production and R&D facilities, Panasonic delivers innovative products incorporating cutting-edge technologies that set the standard for air conditioners worldwide.
Expanding globally, Panasonic provides superior international products transcending borders.

100 % Panasonic: we control the process

The company is also a world leader in innovation as it has filed more than 91539 patents to improve its customers' lives. Moreover, Panasonic is determined to remain at the forefront of its market. In all, the company has produced more than 200 million compressors and its products are manufactured in 294 plants which are located all over the world. You can be assured of the extremely high quality of Panasonic's heat pumps.
This wish to excel has made Panasonic a leading company in heating and turn-key air conditioning solutions. These offer maximum effectiveness, comply with all environmental standards and meet the most avant-garde construction requirements of our time.

Constantly Improving

At Panasonic, we know that the best is always yet to come. This is why our air conditioning and heat pump solutions are constantly upgraded. Panasonic is committed to offering our customers innovative products in the heating and cooling market across Europe, and has the ambition to not only meet but also exceed their requirements.
Our Technology & Design teams anticipate the needs of tomorrow. We look to produce smaller, quieter, efficient solutions - with better technological features – that can reduce energy consumption while providing suitable temperature conditions for the user.

40 years of experienced organization in Europe

The partner for all Europe.
· Full European coverage and integrated organization
· One voice for European Agreements
· Availability and delivery anywhere in Europe
· Specification team to support project design throughout Europe
· European Service Network

Trained professionals.
· 22 Training centres in 15 countries
· More than 5000 professionals trained every year.
Innovation and manufacture in Europe

R&D Department designs solutions for different European needs.
· New factory set up in Czech Republic
· Design software made in Europe for Europe

More than Cooling, Heating and Refrigeration Solutions.
· Security, communication solutions, advanced digital signage technology, access control solutions, displays...

22 Training centres in 15 countries

100 % Panasonic, the DNA of Japanese craftsmanship

JAPAN QUALITY

Applying advanced technologies that truly make life better, we live by an unparalleled commitment to product quality.
Panasonic is building on the Japanese tradition of uncompromising quality control worldwide, developing and manufacturing fine products and delivering them to customers everywhere.

At Panasonic, we believe that the best air conditioner is one that works quietly and effectively in the background whilst minimising its impact on the environment

People who use our products can look forward to long years of high-quality performance without the need for constant service. As part of our rigorous design and development process, Panasonic air conditioners undergo a variety of stringent tests to ensure their effectiveness and long-term reliability. Tests for durability, waterproofing, shock resistance, and noise are conducted on component parts or on the finished products themselves.
As a result of all of these time consuming efforts, Panasonic air conditioners meet industrial standards and regulations in every country where they are sold.

International Standard Quality

To uphold the company's reputation around the world, Panasonic strives continuously to offer quality with minimized environmental impact.

Reliable parts that meet or exceed industrial standards.
In every country where they are sold, Panasonic air conditioners comply with all required industrial standards and regulations. In addition, Panasonic conducts stringent testing to ensure the reliability of parts and materials. The strength of the resin material used in a propeller fan is confirmed by a tension test.

Compliance with RoHS / REACH substance restrictions.
Panasonic products and used materials strictly comply with chemical substance restrictions as defined by RoHS or REACH. During the development and production of parts, stringent inspections are conducted on over 100 materials to ensure that no hazardous substances are included.

Sophisticated production process.
Panasonic's air conditioner production lines employ state-of-the-art factory automation technologies to ensure products are manufactured with high attention to quality to meet expectations of reliability and trustworthiness.

Durability

At Panasonic we know the importance of a long service life with minimal maintenance. That's why we subject our air conditioners to a wide range of stringent durability tests.

Long-term durability test.
To ensure durability and stable operation for many years, we conduct a long-term continuous operation test under conditions that are much more severe than actual operating conditions.

Compressor reliability test.
After the continuous operation test, we remove the compressor from a selected outdoor unit, disassemble it, and examine the internal mechanisms and parts for potential failure. This helps ensure reliable long-term performance under harsh conditions.

Waterproofing test.
The unit - which is subject to rain and wind - complies with IPX4 waterproof specifications. Contact sections on printed circuit boards are resin-potted to prevent adverse effects caused by exposure to water (an unlikely occurrence).

nanoe™ X - Panasonic unique technology to improve indoor air quality

Let Panasonic take care of indoor air quality.
nanoe™ X inhibits a wide variety of bacteria, viruses and pollutants, and deodorises the environment. This unique technology is equipped to provide better air quality whether residential or commercial.

7 effects of nanoe™ X – Panasonic unique technology

Deodorises

Odours

Inhibits 5 types of pollutants

Bacteria and viruses | Mould | Allergens | Pollen | Hazardous substances

Moisturises

Skin and hair

* Refer to https://aircon.panasonic.eu for more details and validation data.

How nanoe™ X works

nanoe™ Technology by Panasonic has been updated from nanoe™ to nanoe™ X.
nanoe™ X improves the indoor air quality in commercial application.

	Structure		
	nanoe™	nanoe™ X	
Generator		Mark 1	Mark 2
	480 billion OH radicals/sec	4,8 trillion OH radicals/sec	9,6 trillion OH radicals/sec
Ion particle structure	OH Radicals	10x times	2x times
	Generation mechanism		
	Corona discharge	Multi-leader discharge	Multi-leader discharge

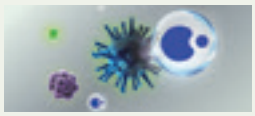
nanoe™ X reaches bacteria.

OH radicals take away hydrogen from bacteria, denatured it.

OH radicals transform hydrogen taken away bacteria to water and inhibit bacterial activity.

nanoe™ and nanoe™ X world in Japan

PUBLIC TRANSPORT

JR East. Yamanote line: Adopted for new railcar models

HOME

Humidifying air purifiers

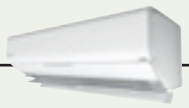
Air conditioners

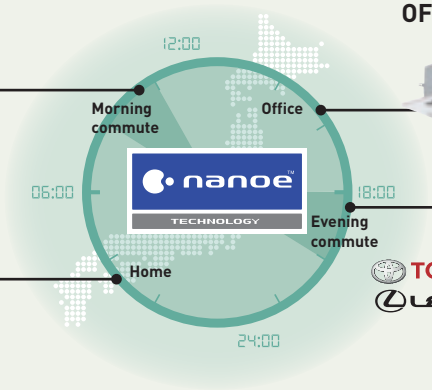

OFFICE (hotel, restaurant, clinic...)

4 Way Cassette air conditioners

AUTOMOTIVE

Expanding adoption to **39** models (as of October 31st, 2019)

International validation

Effectiveness of nanoe™ Technology has been tested by 3rd parties laboratories in Denmark, Malaysia and Japan.

Reduction of 99,9% of Staphyloccocus aureus after 8 hours of exposure. Texting organisation: Danish Technological Institute. Report no. 868988.

99,9 %* OF CERTAIN BACTERIA INHIBITED

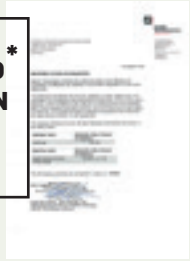
Denmark

Malaysia

Japan

Panasonic: Eco & smart ideas for a sustainable lifestyle

A better life, a better world.
Panasonic is creating a safe and secure society with clean energy.

www.future-living-berlin.com

FUTURE LIVING® BERLIN

Smart City Quarter Berlin

A European Lighthouse Project for Smart Home & Connected Life. Future Living® Berlin.
The building project Future Living® Berlin is a future model for interconnected urban district. Since 2013 GSW Sigmaringen and Unternehmensgruppe Krebs are developing a model for future living – based on their long term expertise in real estate business and in cooperation with leading international technology companies. In spring 2019 first residents will move into the new quarter.
Future Living® Berlin is making use of the increasing possibility to interconnect products and services. Based on this chance smart and intelligent solutions for future living as well for the single apartments as for the quarter are developed. These solutions are enabling residents to use online services in their intelligent housing environment. Based on these opportunities a concept of living for daily routine is developed offering residents comfort, security and time saving.
A special enhancement of Future Living® Berlin is the pre-configuration for different apartments by experts that enable residents to move into a "ready to go" apartment and be directly supported in their daily routines in an intelligent way. By using one central app or native language single apartments can be steered, adopted and individually expanded by future smart products.
Cross-linkage of products and technologies provides all residents with a simple access for an exclusive community care sharing in the residential quarter which is, of course, based on e-mobility and part of an holistic energy concept containing photo-voltaic systems and battery storage. Cooperating with leading technology companies as project partners a continuous and technological progression is guaranteed in the future. Including residents and learning from their usage data participating partner a ready and enabled to improve the offered solutions pointedly further more.

Beside Future Living® Homes there is Future Living® Dialog offering extensive information and use cases for the general public. The project with it's innovative aims is also representing for sustainability and social solutions. Affordable rental and ancillary rental costs result in apartments available for many target groups.
Future Living® Berlin is aiming for conceptional and architectural answers for some of the big challenges of our society as demographical changes, energy turnaround and changing mobility manners. With it's comprehensive solution approach it is unique in Europe.

Demographic change, energy revolution and mobility change. We offer solutions for the challenges of our time.

Projects & Case Studies of Panasonic Heating and Cooling Solutions

Panasonic, a partner with the knowledge and experience to achieve your objectives and green needs.

Integrated technology that permits better work, easy installation, high efficiency performance, and energy savings

Our main targets are the distributed services and B2B-integrated solutions.
Panasonic provides a single point of contact for the design and maintenance of your system, making things easy for you. Given our experience in processes, technologies and complex business models, we can offer you effective solutions that reduce costs, whilst also being efficient, user-friendly, reliable and innovative. Another advantage we offer to our clients is a support service for systems integration projects, which we provide through our wide range of services and solutions.
As a global company, we have at our disposal the financial, logistical and technical resources to develop complex and wide-ranging solutions, both at country and international level by implementing them both on-time and on-budget.

Bulgaria's stand-out residential building with efficient HVAC solution. **Aquarea**

The new Hotel Vincci Gala with efficiency class A, up to 70 % save energy. Barcelona, Spain. **ECOi - ECO G**

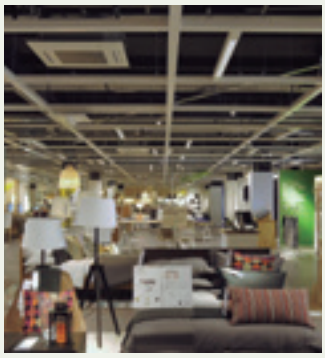

New IKEA "Click and Collect" store in city centre. Birmingham, UK. **ECOi - ECO G**

9 high quality homes in Whittle-Le-Woods near Chorley, UK. **Aquarea**

Andalucia Technology Park. Offices of high energetic efficiency. Spain. **ECOi**

14 bubble style domes to bring a 180-degree transparent window to the nature. Belfast, Ireland. **Aquarea**

Madrid's new hotel Only You Atocha. The hotel has 206 rooms distributed over seven floors. **ECO G**

LIAIGRE showroom, well-known as a luxury design architect in Paris, France. **ECOi**

Marina Village Greystones. 205 apartments and 153 houses. Ireland. **Aquarea**

ITK Engineering GmbH. An innovative office building located in Germany. **ECOi - PACi**

Zalando's solution for its warehouse office conversion at Grand Canal Quay, Dublin. **ECOi**

NHS Canford house clinic, Bournemouth, UK. **VRF**

To find out more: www.aircon.panasonic.eu

PRO Club. The professional website of Panasonic

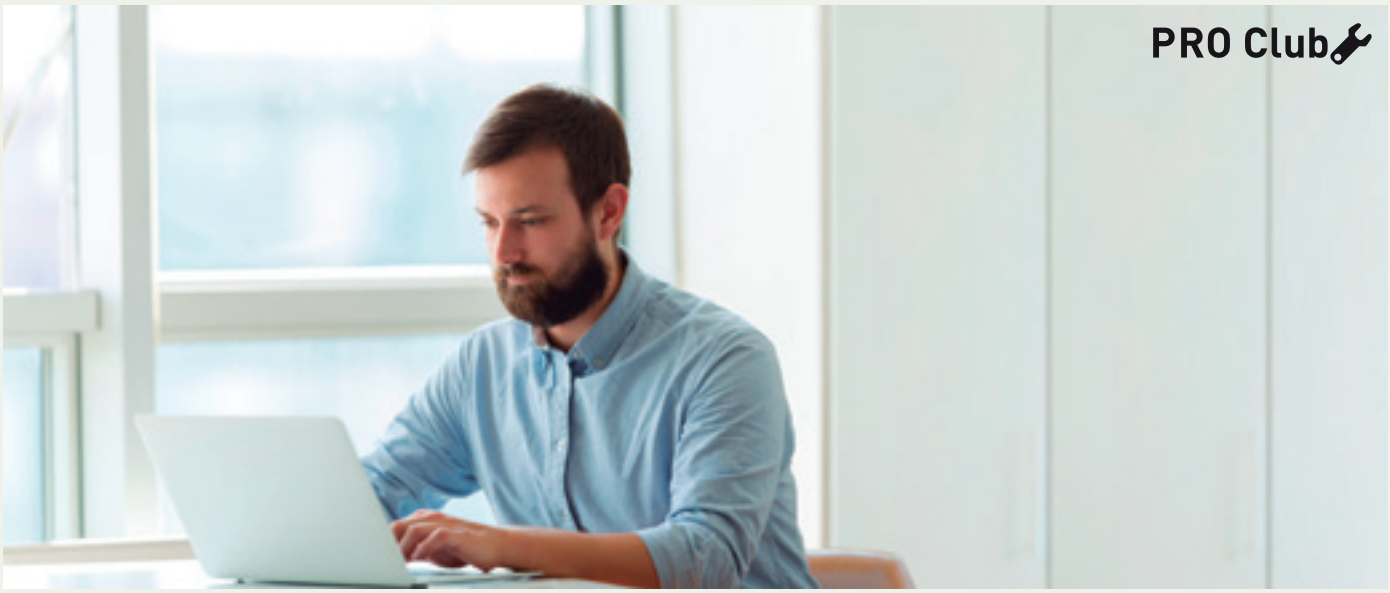

Panasonic PRO Club (www.panasonicproclub.com) is the online tool which makes your life easier! You just have to register and a lot of functionalities are freely available to you, where ever you are, from your computer or smartphone!

- Print catalogues with your logo and your address
- Download the latest Aquarea designer to define your system and select the good Aquarea Heat pump.
- Calculate the specs of the fan coil based on the parameters of your system
- Get Documents of conformity and all other documents you may need
- Download all the service manuals, end user manuals and installation manuals
- Know what to do with error codes
- Find out about the latest news first
- Register for training

Highlighted Features.

- Extensive library of resources
- Tools & Apps for end users. Check availability in your country:
  - My Home: sizing wizard for domestic and Air to Water range
  - My Project: Contact form to Panasonic team
  - iFinder: Lists of installers displayed by postcode
- Special offers & promotions
- Training PRO Academy
- Catalogues (Commercial documentation)
- Marketing (Images in high resolution, advertisements, dECO Guidelines)
- Tools (Professional software, sizing tools...)
- Installers customize leaflets in PDF format with their logo & contact details
- Energy label generator. Download energy labels of any device in PDF format
- Heating calculator
- Noise calculator for outdoor unit
- Aquarea Radiator calculator
- Error Code Search by error code or unit ref. Compatible with smartphone and tablet computer
- Revit / CAD Images / Spec texts
- Access to Pananet, online library of technical documentation
- Download Documents of Conformity and other Certifications
- Commissioning online

Panasonic PRO Club is fully compatible with tablet computer and smartphone.

Easy download Panasonic service documentation and brochures

Customise leaflets with your logo & contact details. Save and print the PDF

Energy label generator. Download Energy labels of any device in PDF format

Error Code on your smartphone and your PC: Search by error code or model reference. Online version + downloadable version for offline use

Panasonic has an impressive range of support services for designers, specifiers, engineers and distributors working in the heating and cooling markets.

Aquarea Designer

This program allows HVAC designers, installers and distributors to identify the correct heat pump for a particular application from Panasonic's Aquarea range, calculate the savings compared to other heat sources and very quickly calculate CO_2 emissions.
Using Panasonic's Aquarea Designer, projects can be developed simply and easily, by either using the Quick Design or Expert Design options. Each allows the user to build up the project data in a simple step-by-step process and choose to output reports (in either Quick or Large formats) as HTML files or as print-outs. To create these useful reports, project data is input, including:

- Heated area
- Heating requirement
- Heating flow and return temperatures
- Climate data (from a simple drop-down menu) including outdoor temperature
- Type of hot water tank, storage capacity and hot water target temperature

Panasonic provides bespoke software helping system designers, installers and dealers to very quickly design and size systems, create wiring diagrams and issue bills of quantities at the push of a button.

Aquarea Designer also means saving

Aquarea Designer will calculate the project's energy costs in terms of hot water, heating and pumping. It will show the equipment running times and calculate the COP (coefficient of performance). It then allows the designer to show clients a comparison with other equipment options such as heating by conventional gas-fired boilers, oil systems, wood, standard electric heating and electric night storage heaters. This compares running costs, initial investment costs and maintenance costs. The comparison can also be made for CO_2 emissions and savings.

The Panasonic PRO Academy

Panasonic takes its responsibility to its distributors, specifiers and installers seriously and has developed a comprehensive Training Programme. The Panasonic Pro-Academy encompasses the traditional hands-on approach to teaching.
New training courses cover three levels. Design, installation, and commissioning & trouble-shooting.

Training courses include:

- Domestic applications Air to Air
- Aquarea air source heat pumps
- VRF ECOi

The courses are offered on site at Panasonic's premises across Europe. The Training Centres display Panasonic's latest product range and give delegates an opportunity to get a hands-on experience with the latest controllers, indoor and outdoor units from the VRF ECOi, Etherea, GHP and Aquarea ranges.

Donwload on www.panasonicproclub.com or connect simply with your smartphone to the PRO Club using this QR

Welcome to Aquarea air to water heat pump

Aquarea's Air to Water Heat Pump for residential and commercial applications.
Offering capacities from 3 kW all the way through to 16 kW, the Aquarea Heat Pump Range is the widest on the market, ensuring a system is available, whatever your heating and cooling needs. Suitable for new build and refurbishment projects, the solutions are cost-effective with minimised environmental impact.

Highlighted Features

GOOD DESIGN

The Good Design Award is among the most prestigious awards for product design excellence. Winning this award has underscored the outstanding performance and energy savings of the Panasonic indoor units All in One and Bi-bloc. In addition, these units' clean, tidy design and functionality make the Aquarea line the ideal system for household applications.

Panasonic's Aquarea range of heat pumps deliver major energy savings thanks to its incredible efficiency even at -20 °C. The Panasonic Aquarea Heat Pumps are designed and produced by Panasonic and not by other companies.

AQUAREA

The Aquarea Heat Pump is a system that generates the perfect temperature and produces hot water, in an easy, cheap and environmentally conscious way, by transferring heat instead of generating it. It is among the Technologies listed on the International Energy Agency (IEA) Blue Map, whose goal is to reduce CO_2 emissions to half the levels emitted in 2005, by the year 2050.
Aquarea is part of a new generation of heating solutions that use a renewable, free energy source (the air) to heat or cool the home and to produce hot water.

Energy saving

Refrigerant gas R32
Our heat pumps containing the refrigerant R32 show a drastic reduction in the value of Global Warming Potential (GWP).

Better efficiency & value for medium temperature applications.
Energy efficiency class up to A++ in a scale from A+++ to D.

Better efficiency & value for low temperature applications.
Energy efficiency class up to A+++ in a scale from A+++ to D.

Better efficiency & value for domestic hot water.
Energy efficiency class up to A+ in a scale from A+ to F.

Inverter Plus.
Panasonic Inverter Plus compressors are designed to achieve outstanding level of performance.

A class water pump.
Aquarea are built-in with A class energy efficiency water pump. High efficiency circulating the water in the heating installation.

High Performance

Aquarea High Performance for low consumption houses.
From 3 to 16 kW. For a house with low temperature radiators or under-floor heating, our high performance Aquarea HP is a good solution. *COP of 5,33 for J Generation 3 kW.

Aquarea T-CAP for extremely low temperatures.
From 9 to 16 kW. If the most important aspect is to maintain nominal heating capacities even at temperatures as low as -7 °C or -20 °C, select the Aquarea T-CAP.

Aquarea HT ideal for retrofit. From 9 to 12 kW.
For a house with traditional high-temperature radiators, the Aquarea HT solution is the most appropriate, can work in output water temperatures of 65 °C even at outdoor temperatures as low as -20 °C.

DHW.
With Aquarea you can also heat your domestic hot water at a very low cost with the optional hot water cylinder.

Down to -20 °C in heating mode.
The heat pumps work in heating mode with an outdoor temperature is as low as -20 °C.

Water filter with magnet.
Easy access & fast clip technology for J Generation.
Water filter only for H Generation.

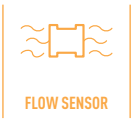

Water flow sensor.
Included on J and H Generation.

5 years compressor warranty.
We guarantee the outdoor unit compressors in the entire range for five years.

SG Ready: Thanks to Aquarea HPM, Aquarea HT range is holding the SG Ready Label (Smart Grid Ready Label), given by Bundesverband Wärmepumpe (German Heat Pump Association). This Label shows the real capacity of Aquarea to be connected in an intelligent grid control.
MCS Certificate number: MCS HP0086.*
Keymark: Check all our certified heat pumps on: www.heatpumpkeymark.com.

High connectivity

Renovation.
Our Aquarea Heat Pumps can be connected to an existing or new boiler for optimum comfort even at very low outdoor temperatures.

Solar kit.
For even greater efficiency, our Aquarea Heat Pumps can be connected to photovoltaic solar panels with an optional kit.

Advanced control.
Remote controller with full dotted 3,5¨ wide back light screen.
Menu with 17 available languages easy to use for installer and user.
Included on J and H Generation.

Internet control.
A next generation system providing user-friendly remote control of air conditioning or heat pump units from everywhere, using a simple Android™ or iOS smartphone, tablet or PC via the internet.

Connectivity.
The communication port can be integrated into the indoor unit and provides easy connection to, and control of, your Panasonic heat pump to your home or building management system.

Warning On Quality Of Water and Groundwater Use:
This product is designed to comply with the European Water Quality Directive 98/83/EC amended by 2015/1787/EU. The lifespan of the product is not guaranteed in the case of the use of groundwater, such as spring water or well water, the use of tap water when salt or other impurities are contained, nor in areas of acidic water quality. Maintenance and warranty costs related to these cases are the customer's responsibility.

*** Not all products certified. As the certification process is on-going and the list of certified products constantly changing, please check for latest details on the official websites.**

Introducing the Panasonic Aquarea – air source heat pump

At the forefront of energy innovation, Aquarea is resolutely positioned as a “green” heating and air conditioning solution.

Introducing the Panasonic Aquarea – air source heat pump

In European households, 79 %* of energy consumption comes from heating and producing domestic hot water. By converting heat energy in the air into household warmth, highly efficient Aquarea technology reduces CO_2 emissions and environmental impact, compared to conventional boilers and electric heaters.
An Aquarea air source Heat Pump circulates fresh air and passes it over refrigerant-filled coils (like a refrigerator). The captured heat is automatically transferred to water, which is then ready for use in your heating system and for supplying all of your domestic hot water needs.
Panasonic’s latest technology offers you a sustainable alternative to oil, LPG and electric heating systems.

* ec.europa.eu/eurostat

Why Panasonic Aquarea air source heat pumps?

Optimum solutions for premium comfort.

Panasonic Aquarea Heat Pumps warm your home effectively and efficiently, they precisely control the indoor temperature thanks to reliable Panasonic Inverter Compressors. Aquarea can also cool space in summer and bring hot water all year round. Panasonic has created a night mode to reduce the noise when it’s needed.
Aquarea offers enhanced connectivity to improve the comfort of users. For example, with ventilation equipment connected, it will make the indoor air cleaner and fresher. With solar panels, it can operate using renewable energy.

Adapts to your needs.

Panasonic Aquarea heat pumps produce heating, cooling and domestic hot water with a single system and can be connected to floor heating, radiators or fan coil units. In refurbishment projects Aquarea can be integrated in existing heating systems.
Aquarea is able to reach up to 60 °C water outlet and allows high flexibility in installation thanks to the large piping length of up to 50 m between indoor and outdoor (see table each model limitations).
From 3 kW to 16 kW, there is always an option for lower initial investment and lower operational cost.

Energy saving means money savings.

Panasonic Aquarea heat pumps are a smart choice for saving in heating, as they provide savings of up to 80 % on heating expenses compared to electrical heaters.
Aquarea units reach A+++ within the range of A+++ to D in heating and A+ in the range of A+ to F in domestic hot water, all leading to large savings in electricity bills.
Compared to an electric heater, the Air to Water Heat Pump offers five times the output in kilowatts per every input in kilowatts. Consumption can be further reduced by connecting photovoltaic solar panels to the system.

Contributing to a descarbonised society.

The Air to Water Heat Pump is powerful technology designed with the future in mind.
The heat pump is considered a ‘green’ choice as the heat energy is taken from the environment, making it a sustainable option. It maintains a comfortable indoor temperature while significantly reducing environmental burden.
All Aquarea heat pumps can also be connected to a solar thermal or PV system in order to increase efficiency and minimise environmental impact.

Panasonic Aquarea key points

- Panasonic’s unique software and inverter technology for low consumption houses, allows the heat pump to produce heating water at 35 °C.
- Most of the Aquarea heat pumps have a 10 L expansion vessel fitted internally
- Inverter compressor which can regulate the output capacity depending on demand
- Twin dice system included within the system (twin fan outdoor unit)
- 3/6/9 kW electrical heater included in the heat pump (depending on unit)
- Panasonic Aquarea T-CAP heat pumps can work in outdoor temperatures as low as -28 °C (for All in One and Bi-bloc, -20 °C for Mono-bloc) and guarantee the capacity without backup heating down to -20 °C[1)]
- Panasonic heat pumps are very quiet and have a noise reduction setting for night mode

Comparison:1 kW input versus output in kW.

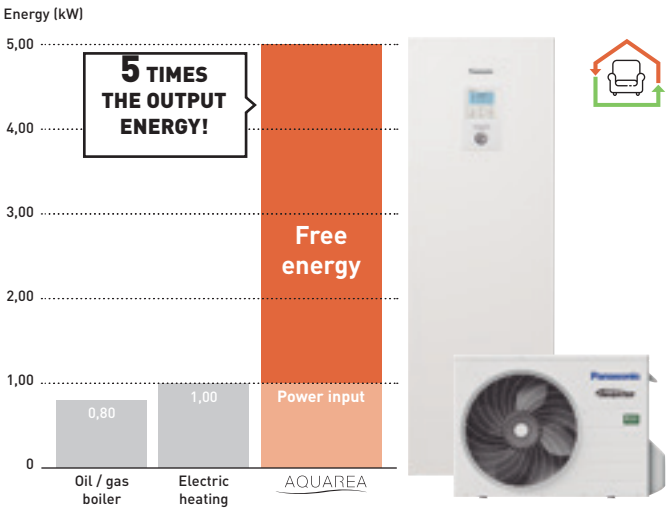

1) 35 °C flow temperature.

Aquarea Heat Pump Line-Up

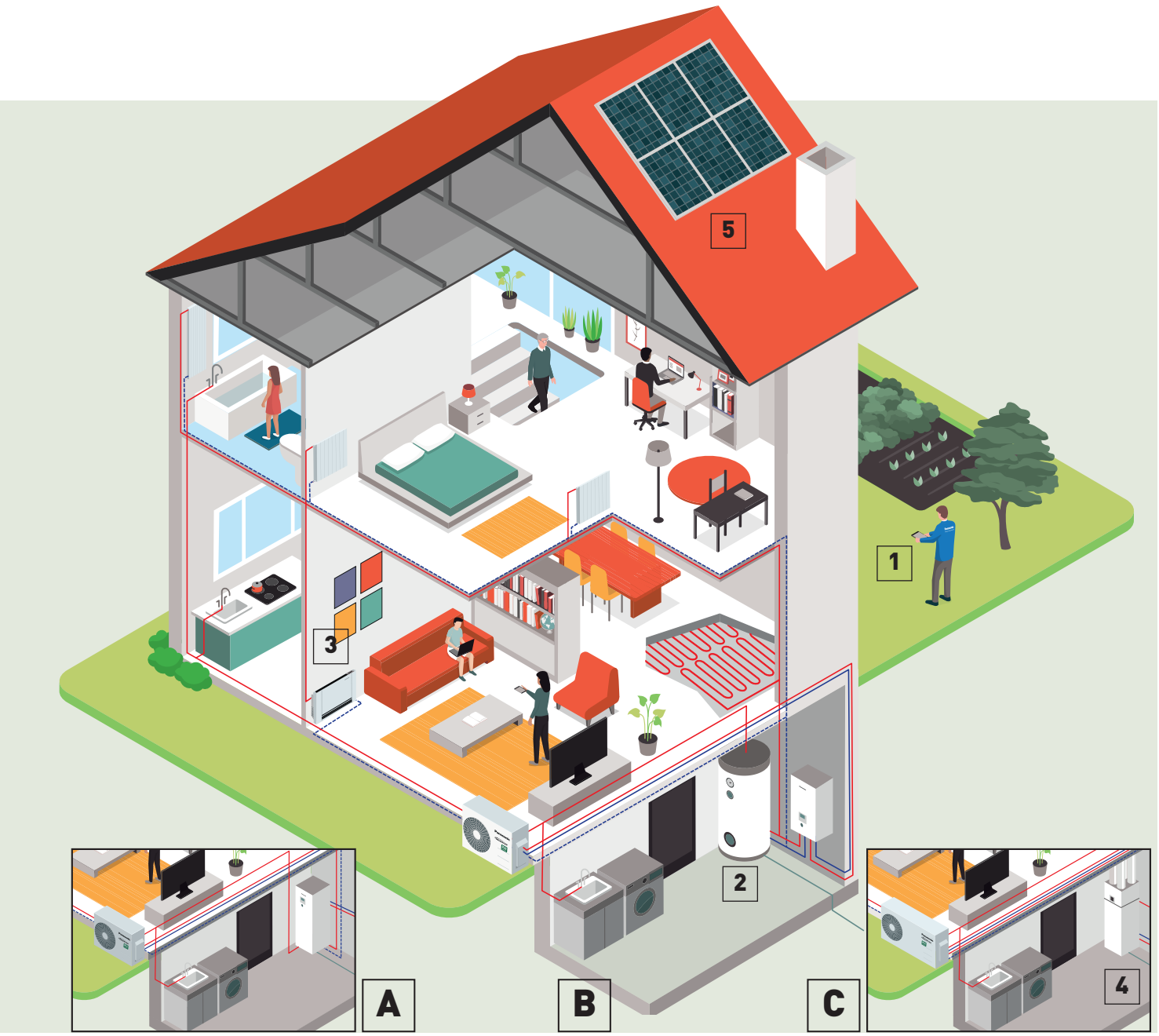

All in One system.

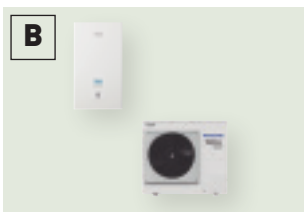

Bi-bloc system.

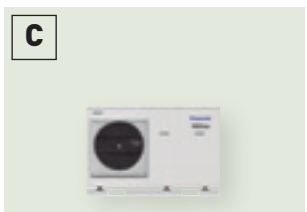

Mono-bloc system.

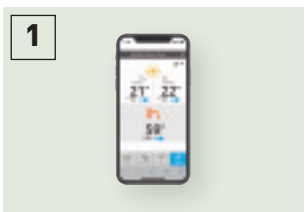

Control through smartphone, tablet or computer (optional).

Super High Efficiency cylinder (optional).

Fan coils for heating and cooling (optional).

Heat Recovery Ventilation + DHW Tank (optional).

Heat Pump + HIT Photovoltaic solar panel (optional).

Panasonic Aquarea offers you solutions, helping to make the home more efficient and the installation cheaper and easier.

Aquarea High Performance

For new installations and low consumption homes.
Outstanding efficiency and energy savings with minimised CO_2 emissions and minimum space. Improved performance with COPs up to 5,33 for J Generation 3 kW.

Aquarea HT

For a house with old high-temperature radiators.
Ideal for retrofit: green energy source works with existing radiators. Aquarea HT Solution is the most appropriate, providing output water temperatures of 65 °C even at outdoor temperatures as low as -15 °C.

Aquarea T-CAP

For extremely low temperatures, refurbishment and innovation.
Ideal to ensure that the heating capacity is maintained even at very low temperatures. This line-up is able to maintain the heat pump output capacity until -20 °C outdoor temperature without the help of an electrical booster heater.

DHW Stand Alone

Highly efficient heat pump water heater.
Ideal to cover the hot water needs of a family house, stand-alone DHW heat pumps are designed to provide maximum comfort and savings in the production of DHW. Consumption of the A+ DHW heat pump is reduced by 75 % compared with traditional electric water heaters.

Aquarea High Performance	Aquarea T-CAP	Aquarea HT	DHW Stand Alone
Heating - Cooling - DHW Single Phase from 3 to 16 kW Three Phase from 9 to 16 kW	Heating - Cooling - DHW Single Phase from 9 to 12 kW Three Phase from 9 to 16 kW	Heating - DHW Single Phase from 9 to 12 kW Three Phase from 9 to 12 kW	Only DHW From 100 to 270L
Connectable to			
Radiators - Fan coil - Underfloor heating - DHW	Radiators - Fan coil - Underfloor heating - DHW	Traditional high-temperature radiators - DHW	Domestic hot water
Application			
Normal installation	For extreme cold ambient	Retrofit for old radiators	Only DHW
Energy efficiency			
A+++ / A++ Heating 35 °C / 55 °C [1]	A++ / A++ Heating 35 °C / 55 °C [1]	A++ / A++ Heating 35 °C / 55 °C [1]	A+ DHW 50 ~ 62 °C [2]
Minimum outdoor temperature			
-20 °C	-28 °C (All in One and Bi-bloc) -20 °C (Mono-bloc) [3]	-20 °C	-5 °C
Minimum outdoor temperature to provide constant capacity at 35 °C supply water temperature			
-7 °C (not for all units)	-20 °C [3]	-15 °C	—
Supply temperature for heating. Maximum / Heat pump only			
75 °C [4] / 55 °C [5] (or 60 °C for Aquarea J Generation)	75 °C [4] / 60 °C [5]	75 °C [4] / 65 °C	—
Control and connectivity			
Smart Grid Ready [6] Wireless LAN Ready	Smart Grid Ready [6] Wireless LAN Ready	—	—
Range			
Bi-bloc from 3 to 16 kW Mono-bloc from 5 to 16 kW All in One from 3 to 16 kW (185L)	Bi-bloc from 9 to 16 kW Mono-bloc from 9 to 16 kW All in One from 9 to 16 kW (185L)	Bi-bloc from 9 to 12 kW Mono-bloc from 9 to 12 kW	Wall-mounted 100 and 150L Floor-standing 200 and 270L

All data in this chart is applicable in most of models in each line up, check product specs to confirm. 1) Scale from A+++ to D. 2) Scale from A+ to F. 3) 9 and 12 kW. 4) DHW maximum temperature with heater. 5) In case of outdoor temperature over -10 °C. 6) H Generation with CZ-NS4P, F and G Generation with Heat Pump Manager. * DHW Stand Alone is produced by S.A.T.E.

Aquarea, top-level efficiency across the board

Aquarea J Generation: much more than Aquarea in R32. Available in 3/5/7/9 kW All in One, Bi-bloc and 5/7/9 kW Mono-bloc.

1 Keeping Aquarea essence

· Free space on the top of All in One
· A+++ in heating mode at 35 °C (scale from A+++ to D)
· Service Cloud by accessory

2 Higher efficiency

· SCOP up to + 5 % vs H Generation
· DHW COP up to 3,30 (for 3 and 5 kW models)

3 More flexibility in design

· 60 °C water temperature
· Piping length improved: 7/9 kW: 50/30 m (up to 40 m without minimum floor area*) - 3/5 kW: 25/20 m
· Chiller function cooling down to 10 °C outdoor temperature

* With a 5 % decrease of the capacity.

4 New smart functions

· SG ready for heating, cooling and DHW modes
· Utility remote bivalent control: By dry contacts*
· Stop external device when defrost by Dry contact (for fan coil fan stop)*

* Can not be used at same time.

5 More comfort

· Better comfort in extreme low temperature: Heating curve can be set up down to -20 °C
· Efficient or comfort mode for DHW: Part load for better efficiency or full load to reduce the heat up time
· DHW two sensor position selectable for All in One: Efficient position (best DHW COP) or bigger volume of hot water

Other improvements: More silent outdoor units / Magnet filter for water cycle.

R32 refrigerant gas: A 'small' change that changes everything

Panasonic recommends R32 because it is comparably environmentally friendly. Compared to R22 and R410A, R32 has a very low potential impact on the depletion of ozone layer and global warming.

In line with the European countries who are concerned in protecting and maintaining the environment by participating in the Montreal Protocol to protect the Ozone Layer and prevent Global Warming, Panasonic is leading the switch to R32.

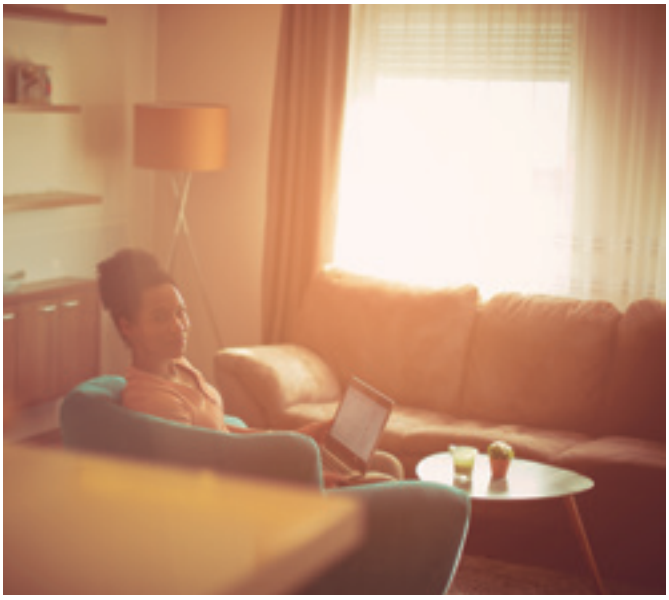

Aquarea H Generation.

The beauty of comfort. The H Generation is being introduced from 3 to 16 kW. The small capacities are specially designed for low energy homes and achieve an impressive COP of 5 (on the 3 kW).

Better Efficiency & Value A++/A+++.

· A++ for medium temperature applications (radiators. ErP 55 °C in the scale from A+++ to D)
· A+++ for low temperature applications (floor heating. ErP 35 °C in the scale from A+++ to D)

Aquarea, a generation of energy efficient heating and hot water.

Thanks to the system's high degree of technology and advanced control, it is able to maintain a high output capacity and efficiency even at -7 °C and -15 °C. The Aquarea's software can be set for the requirements of low consumption homes in order to maximise energy efficiency. Whatever the weather, Aquarea can work even at -28 °C (for T-CAP All in One and Bi-bloc) lower limit. The compact design of the outdoor unit makes installation very easy.

Aquarea All in One

Aquarea All in One: This range intelligently integrates the best Hydrokit technology with a premium quality stainless steel tank, which is maintenance-free.

Aquarea All in One: the best Panasonic technology for your home

All in One with U-Vacua insulation technology
Panasonic U-Vacua™ is a high performance vacuum insulation panel with very low thermal conductivity, that performs about 19 times better than standard urethane foam.

High quality components inside:
· Maintenance free Inox stainless 185 l tank
· Variable speed water pump (class A)
· Magnetic Filter with shut-off valves
· Expansion vessel
· Vortex flow sensor
· Back up heater
· Safety valve
· Air purge valves
· 3 way valve inside

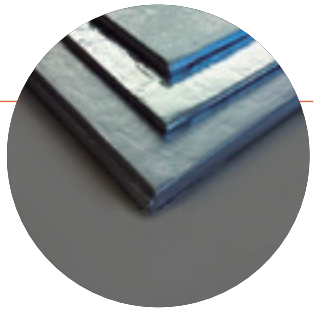

U-Vacua™ VIPs consist of a unique fiberglass core encased in a laminate film made up of several layers that include nylon, aluminium, and a protective layer. Interior pressure is reduced to a vacuum of 1-20 Pa, thereby minimising thermal conductivity.

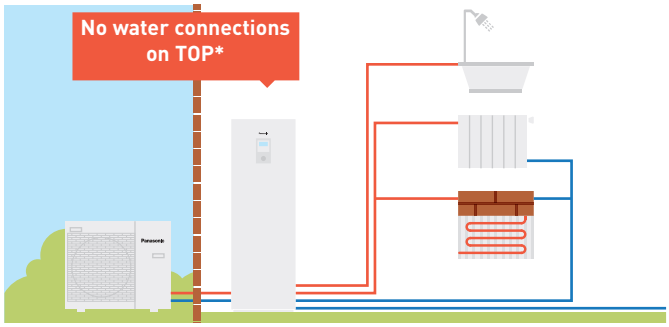

Technology to save space

Space-saving solutions, ideal for installations with restricted space.
· Hydrokit and tank in a single unit
· Water piping connections at the bottom, keeping more space above the unit free for use
· No buffer tank required
· Piping length up to 50 m (for J Generation 7 and 9 kW)
· Modern remote controller can be installed up to 50 m from the indoor unit

* Excluding 2 Zone model.

All in One, compact and easy to install

The Aquarea All in One belongs to the new generation of Panasonic heat pumps for heating, cooling and providing domestic hot water in the home.
Improved square design with white goods finish. Modern remote controller can be installed up to 50 m from the indoor unit.

Installer Friendly:
· Electrical connections is now located on front side
· Easy access to parts and easy to install by having all pipings in a row
· Remote controller with full dotted wide screen and new functions
· Can connect additional room temperature sensor, solar kit, 2 zones control, swimming pool and circulating pump (need optional PCB: CZ-NS4P)
· No buffer tank is required

All in One with 2 zones control.
· 2 heating circuits, with 2 different water temperatures
· 2 water pumps and 2 water filters
· Floor heating water control with mixing valve

2 Zones with control of 2 water temperatures (such as underfloor with water at 35 °C and radiators with water at 45 °C).

The new Aquarea All in One Compact unit is the ultimate space-saving solution.

Its 598 x 600 mm footprint, standard size of other big appliances, reduces the space required for the installation.

*** 1 heating zone version available only.**

Aquarea High Performance

For new installations and low consumption homes. Outstanding efficiency and energy savings with minimised CO_2 emissions and minimum space.

High Performance helps you to meet strict building requirements and reduce building costs

The heating and production of domestic hot water have a very important impact on the energy consumption of a house. Efficient Panasonic heat pumps can help to significantly reduce the energy consumption of the house.

Key points of the line-up

- Improved performance with COPs up to 5,33 for J Generation 3kW
- Reduced energy consumption through our circulating pump with energy efficiency class "A"
- Remote controller functions added: Auto mode, holiday mode, power consumption display

Panasonic has designed the Aquarea Bi-bloc and Mono-bloc heat pumps for homes which have high performance requirements. Whatever the weather, Aquarea can work even at -20 °C! The Aquarea is easy to install on new or existing installations, in all types of properties.

High Performance Heat Pumps are also highly efficient (take the KIT-ADC03JE5 for example)

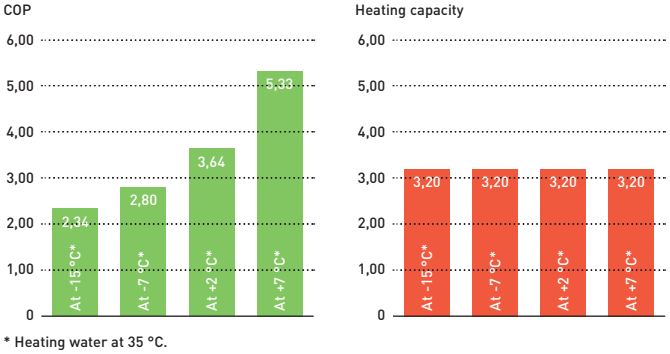

* Heating water at 35 °C.

Standard circulating pumps vs our circulating pump with energy efficiency class "A"

Comparison of energy consumption of circulation pumps. Circulating pump with energy efficiency class "A" with Dynamic flow control for 5 kW Mono-bloc.

* Based on German market: Assuming Standard pump may vary depending on consumption and energy cost.

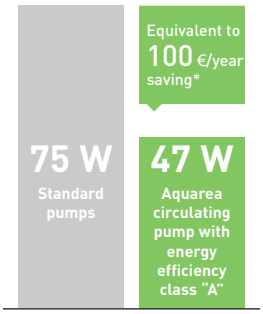

Panasonic created a night mode to reduce the noise when it's needed

Special attention has been given to noise levels.

1) Sound pressure measured at 1 m from the outdoor unit and at 1,5 m height.
2) At standard condition working at heating capacity at +7 °C (heating water at 35 °C) for two fans outdoor units. For one fan outdoor units, night mode reduction is 3 dB(A).

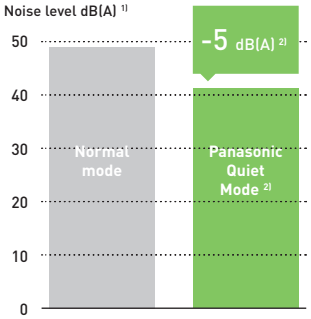

High Performance J Generation keeps 60 °C water outlet temperature even at very low temperatures

Aquarea High performance J Generation is able to keep 60 °C water outlet temperature in outdoor temperatures down to -10 °C, keeping high comfort in the room even at low temperatures. With other heat pumps, water temperature dramatically drops at low outdoor temperatures, making the heat pump to work out of the design conditions and creating discomfort inside the room.

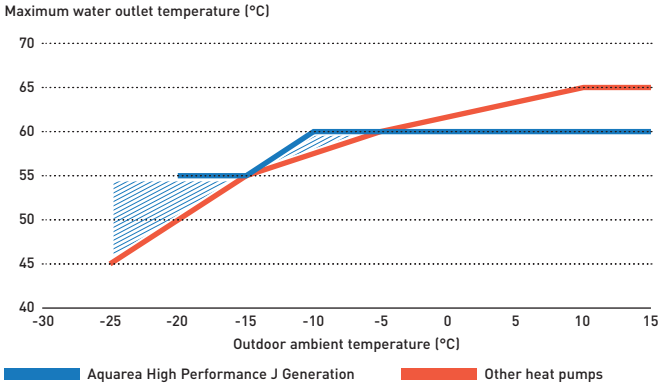

Aquarea T-CAP

For retrofit and new builds, install the T-CAP heat pump where the kW output capacity is demanding.

Ensure the heating capacity is maintained even at low temperatures

The entire Aquarea T-CAP lineup is excellent for replacing gas or oil boilers and for connecting to new underfloor heating, radiators or fan coil units. All Aquarea Heat Pumps can also be connected to a solar thermal or PV system in order to increase efficiency and minimise environmental impact.

Higher efficiency compared to other heating systems

Panasonic heat pumps have a maximum COP of 4,85 at +7 °C which makes them much more efficient than others heating systems.
T-CAP is also able to provide extremely high efficiencies, whatever the outside or the water temperature.

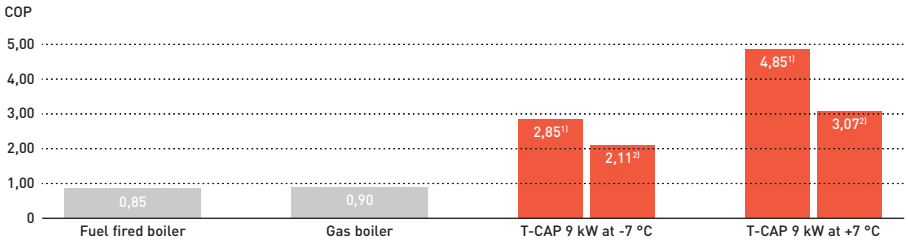

1) Water at 35 °C. 2) Water 55 °C.

No need to oversize to reach required capacity at low temperatures

Panasonic heat pumps can work in outdoor temperatures as low as -28 °C and maintain capacity without backup heating at -20 °C[1]. With other heat pumps, a larger capacity is required to achieve the same level of comfort at low temperatures.

1) 35 °C flow temperature.

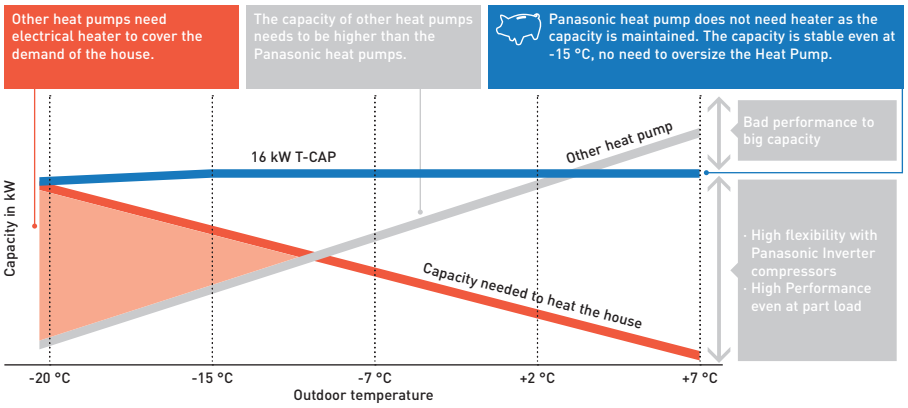

How Aquarea T-CAP maintains performance even at -20 °C outdoors

Thanks to effective refrigerant control via our unique dual-piped heat exchanger and bypass, Aquarea T-CAP provides stable heating even at -20 °C.

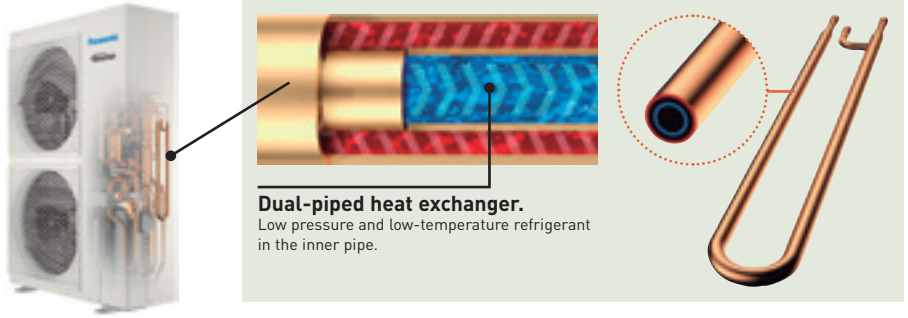

Aquarea Super Quiet T-CAP Bi-bloc

The special outdoor chassis notably reduces operation sound by up to 15 dB.[1] [2]

1) When comparing WH-UQ12HE8 at quiet mode level 3 operation with WH-UX12HE8 at full load operation.
2) Heating capacity may drop.

Key points of the line-up

- Ability to maintain the heat pump kW[1] output capacity until -20 °C outdoor temperature without the help of an electrical booster heater
- High heating capacity even at low ambient temperatures
- Additional functions: Auto and holiday mode, boost, drying concrete and power consumption display
- 3/6/9 kW electrical heater is included in the heat pump (depending on unit)
- Cooling mode activation possible via software[2]

1) At 35 °C flow. 2) This activation can only be done by service partner or installer.

Aquarea HT

Aquarea HT can produce a flow temperature of 65 °C making it the ideal high efficiency replacement for oil/gas boilers connected to high temperature radiators.

Green energy source works with existing radiators

The Aquarea HT (9 kW & 12 kW) allows you to replace your traditional heating source (such as oil or gas) while keeping the existing old style radiators for minimum disruption to the home.

Aquarea HT: High savings and low CO_2

The benefit of replacing a traditional heating systems with Aquarea HT are clear: Reduced CO_2 emissions, future proofing running costs.
Panasonic heat pumps are much more efficient than fossil fueled boilers and help you to reach your house energy targets.

Yearly savings with Aquarea HT

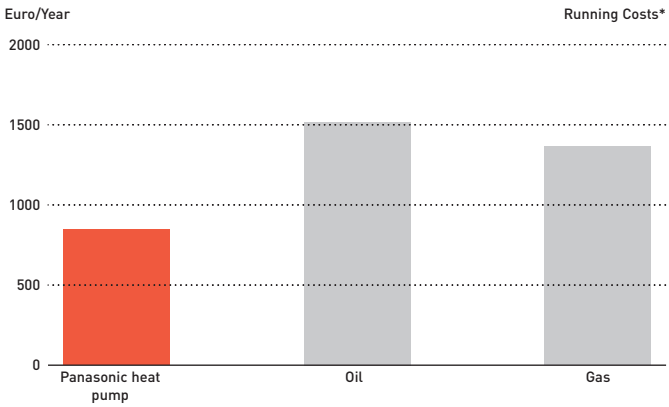

* For a 170 m² house and 40 W/m² energy losses in central Europe Conditions, outside minimum conditions -10 °C.

Smart Bivalent operation

Using the Aquarea bivalent controller, it is now possible to combine different heat sources (boiler with heat pump) allowing to set up the system to operate in the most efficient way.

Heat Pump + Boiler with DHW cylinder controlled by the smart bivalent controller.

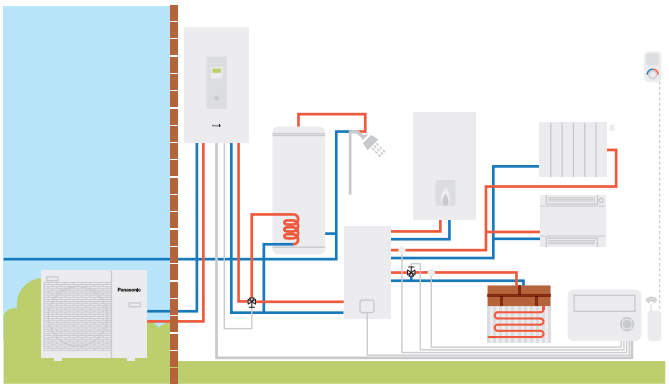

Easy installation

Air source heat pumps are simple to install. They do not require a chimney, gas connection or oil/lpg tank. All that is required is a power supply connection.

Panasonic Aquarea HT is highly efficient even at low outdoor temperatures

Heating Capacity of a 9 kW HT (WH-SHF09F3E5).

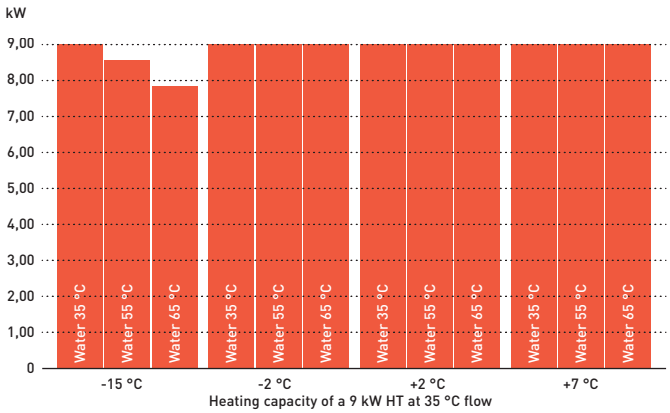

COP (Coefficient of Performance) of a 9 kW HT (WH-MHF09G3E5).

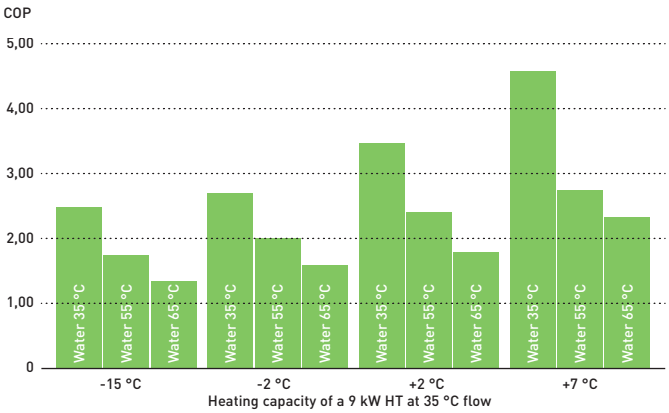

The Aquarea HT range is easy to install and is available with nominal heat outputs of 9 kW or 12 kW. These can be either single or three phase, in both Bi-bloc and Mono-bloc versions.

Aquarea commercial

Restaurant with Aquarea

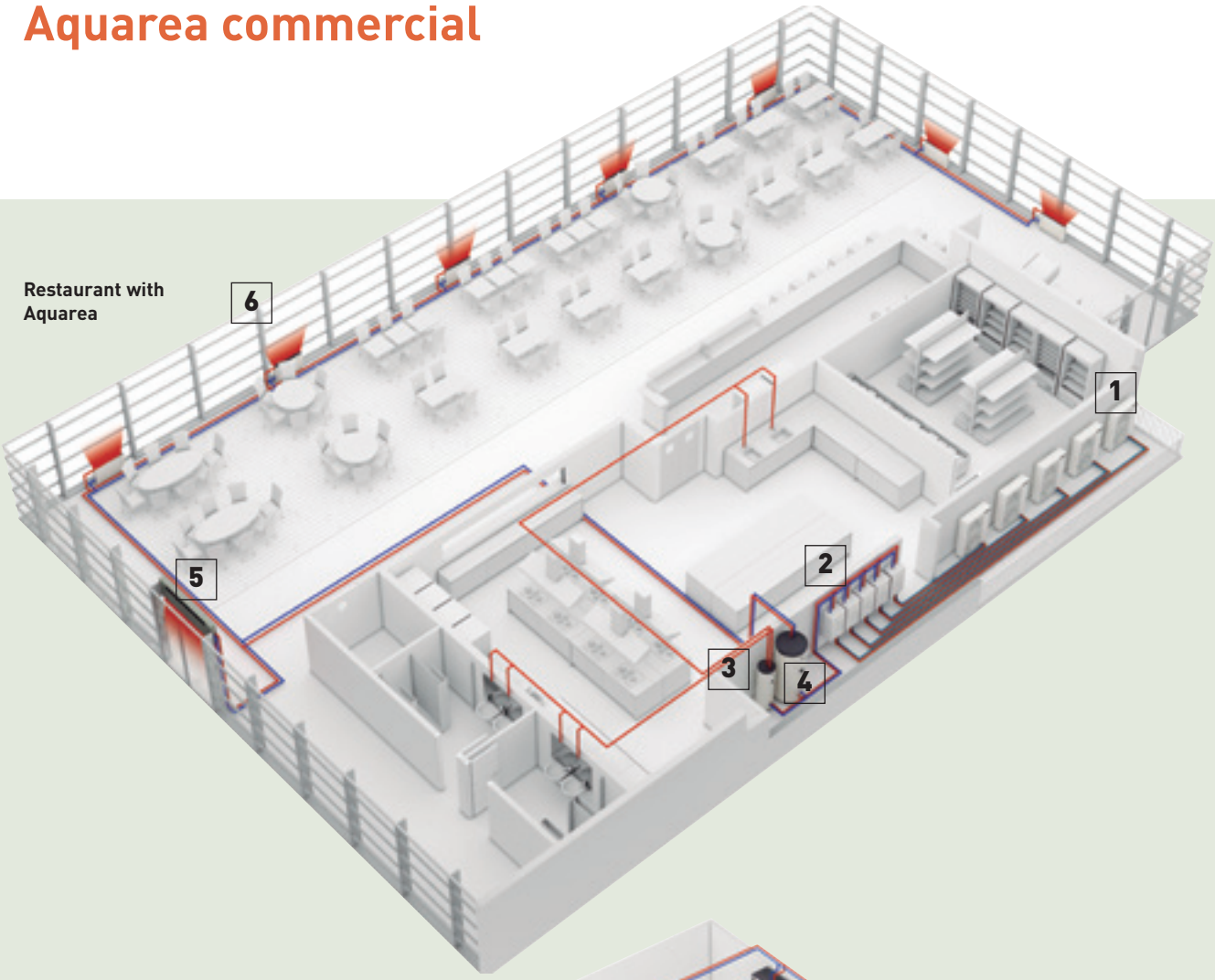

Supermarket with Aquarea

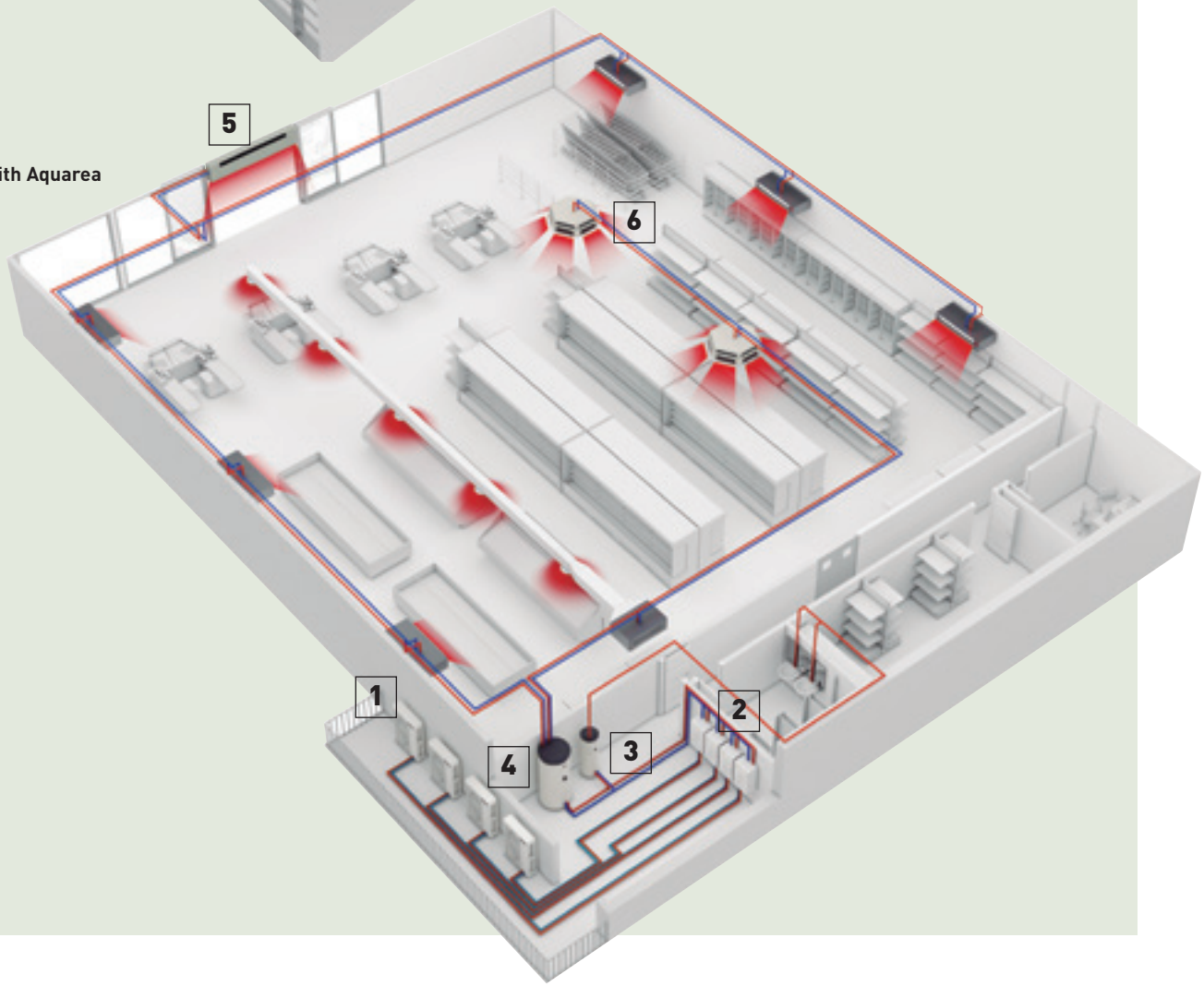

Solutions for best savings. Efficient Panasonic heat pumps can help to significantly reduce the energy consumption of your business.

Panasonic Aquarea Heat Pumps offer space saving, energy-efficient heating and can be easily adapted for installation in flats, houses and commercial premises. Businesses producing heating, cooling and big quantities of hot water at 65 °C, such as restaurants or supermarkets, installing an Aquarea Heat Pump system can also use this wasted heat to improve energy efficiency further.
Heat pump technology is scalable, meaning that it can be installed in buildings of varying sizes, offering both small and large-scale heating solutions. The technology is also environmentally friendly when compared to traditional heating systems alternatives based on fossil fuel energy and in addition it is more energy efficient.

Key points:
· Efficient hot water production
· Fast return of investment
· Easy control
· Easy integration in the existing water system: fan coils, floor heating, domestic hot water tanks, etc
· Very good part load management
· High efficiency

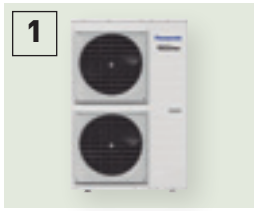

Aquarea T-CAP.
16 kW heat pumps on cascade mode.
T-CAP line-up is an ideal replacement for old gas/ oil boilers

High efficiency Aquarea T-CAP hydromodule.
Indoor unit of Aquarea Bi-bloc systems. When a Mono-bloc system is used, the hydromodule is integrated in the outdoor unit.

Super high efficiency Tanks.
Combining Panasonic Aquarea with a high efficiency tank ensures the desired volume of hot water, at the correct temperature while reduced energy costs.

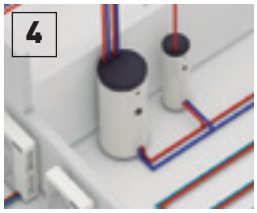

Buffer Tank.
Panasonic Aquarea can be combined with the hydraulic elements of the new or existing water system.

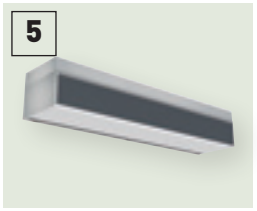

Air Curtain with water Coil.
Water coil air curtains can be used in the hydraulic system to have efficient performance of the water system.

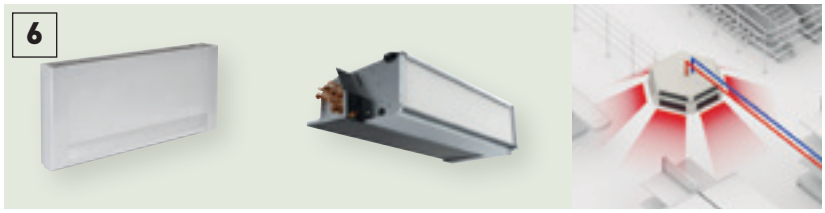

Fan coils for heating and cooling.
Aquarea heat pumps can be easily connected to the existing water system: 2 way and 4 way fan coils, floor heating, DHW tanks...

Cascade manager.
The Cascade manager enables the control of up to 10 Aquarea heat pumps (balancing the working hours and making the operation more efficient) and up to 2 buffer tanks.

BMS integration.
The cascade system can be easily in integrated in a Modbus project thanks to the Cascade manager.

Burger & Lobster restaurant. Bath, UK.
Panasonic's air-to-water Aquarea system has been installed in the latest glamorous Burger & Lobster restaurant in Bath. The Octagon Chapel, a large listed building in the city centre, was converted to accommodate the restaurant, and Panasonic's Aquarea system provided an extensive, energy efficient and unobtrusive heating and cooling solution.

Carluccio's restaurant. UK
One of UK's leading Italian restaurant, Carluccio's, wanted to install a system which would provide the desired volume of hot water, at the correct temperature while at the same time reduced energy costs. FWP installed a 12 kW Aquarea T-CAP mono bloc unit which would allow for the free air from the kitchen roof space to be transferred through condensing unit providing hot water at the optimum temperature.

Aquarea Smart Cloud for end users

The most advanced heating control for today and for the future. Aquarea can be connected to the Cloud with CZ-TAW1, enabling both end user control and remote maintenance by service partners.

WATCH DEMO

* User interface image may change without notification.

Works with IFTTT

More possibilities with IFTTT.

IF This Then That: IFTTT service enables user to automatically trigger actions for Aquarea system based on other apps, web services or devices.

Connect your Aquarea to your voice assistant, get an e-mail if your Aquarea gets an error or automatically turn on your Aquarea on Heat Mode when outdoor temperature drops below specified level.

Easy and powerful energy management

The Aquarea Smart Cloud is much more than a simple thermostat for switching a heating device ON or OFF. It is a powerful and intuitive service for remotely controlling the full range of heating and hot water functions, including monitoring energy consumption.

How does it work?

After connecting an Aquarea J or H generation to the cloud by wireless LAN or by wired LAN, the user accesses the Cloud portal to remotely operate all functions of his units. He can also permit service partners to access customised functions for remote maintenance and monitoring.

Requirements

1. Aquarea J or H Generation
2. In-house internet connection with router wireless LAN or wired LAN
3. Get a Panasonic ID in https://aquarea-smart.panasonic.com/

Functions:

· Visualization and Control
· Scheduling
· Energy Statistics
· Malfunction notification

Advantages

Energy savings, comfort and control from anywhere.
Increased efficiency and resources management, operating costs savings and owner satisfaction.
The Aquarea Smart Cloud services are focused on enabling full remote maintenance of the Aquarea system. This allows maintenance specialists to engage in predictive maintenance and system fine-tuning, as well as fixing malfunctions when they occur.

Aquarea compatibility	J and H Generation
Connection point	CN-CNT Aquarea port
Home router connection	Wireless or Wired LAN
Temperature sensor	Can use remote controller sensor
Tablet or PC browser compatibility*	Yes
Operation from remote — ON/OFF — Temperature setting Mode selection — DHW setting — Error codes — Scheduling	Yes
Heating areas	Up to 2 zones
Power consumption estimation — Operation log history	Yes — Yes

* Check browsers and version compatibility.

Aquarea Service Cloud for Installers / Maintenance

WATCH DEMO

The real remote maintenance made simple

The Aquarea Service Cloud allows installers to take care of their customers' heating systems remotely. It saves time and money and shortens the response time, thus increasing the customers' satisfaction.

Advanced functions for remote maintenance with professional screens:

- Global view at a glance
- Error log history
- Full unit information
- Statistics always available
- Most settings available

Home page.
Status of connected users at a glance. 2 view options: map view or list view.

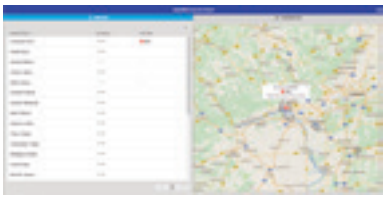

Status tab.
Current status of unit with a maximum 28 parameters.

Statistics tab.
Customisable statistics of a maximum of 71 parameters.
Available anytime with the information of the last 7 days.

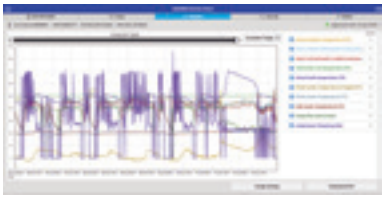

Settings tab.
Most of the user and installer settings can be done remotely.

Activation of the Aquarea Service Cloud

Requirements.

Hardware and connection	End user registration	Installer / maintenance registration
J or H Generation Aquarea connected to CZ-TAW1	Get Panasonic ID	Get Service ID
In-house internet connection with Wireless LAN or Wired LAN	Aquarea Smart Cloud	Aquarea Service Cloud

Connecting the unit to the Aquarea Service Cloud.
The process can be initiated by the end user or by the installer.
The end user can select and change the installer's level of control anytime (4 levels).

Installer registration: https://aquarea-service.panasonic.com/

End user registration: https://aquarea-smart.panasonic.com/

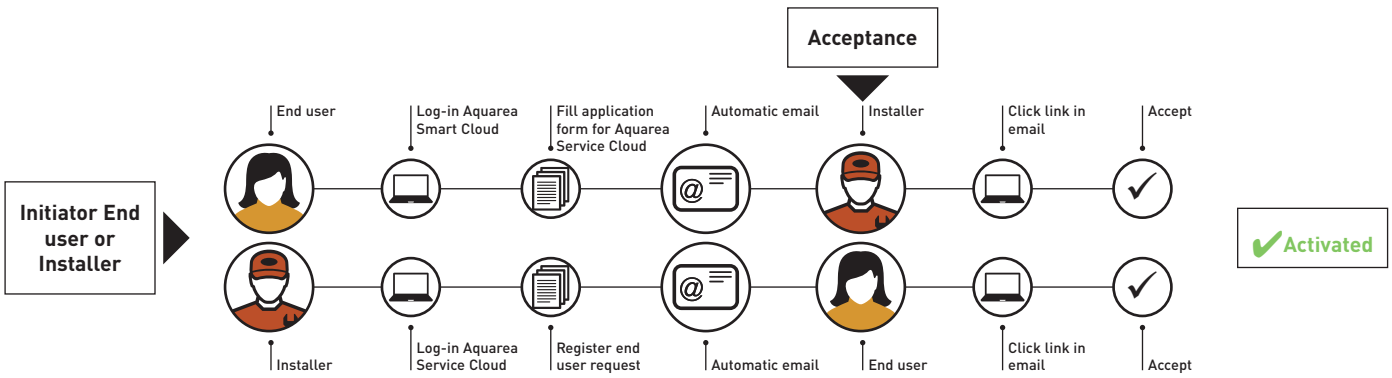

Control and Connectivity

Home connectivity and Home Managements Systems integration is becoming more and more popular.

These integrations helps to control all house devices from centralised platform and helps to optimise the operation and running costs. Panasonic interfaces are made to work with both KNX and Modbus, the most populars protocols. Also for non integrated control, Panasonic developed a simple connection to Wireless LAN, with this End User can control remotely its own heat pump from wherever.

Connectivity. Control by BMS

Great flexibility for integration into your KNX / Modbus projects allows fully bi-directional monitoring and control of all the functioning parameters.

Reference	KNX PAW-AW-KNX-1i / PAW-AW-KNX-H	Modbus® PAW-AW-MBS-1 / PAW-AW-MBS-H
Small dimensions	✔	✔
Quick installation and possibility of hidden installation	✔	✔
External power not required	✔	✔
Direct connection to the unit	✔	✔
Control and monitoring, from sensors or gateways, of the internal variables of the indoor unit and error codes and indication	✔ Fully interoperable	
Control and monitoring, from any BMS or PLC Modbus Master, of internal variables of the indoor unit and error codes and indication		✔ Fully interoperable
Aquarea unit can be controlled simultaneously by its remote controller and by KNX / Modbus Master devices	✔	✔

These interfaces allows full monitoring and control, bi-directional, of most of the functioning parameters of Aquarea control from KNX / Modbus installations.

Advanced controller for J and H Generation

Improved visibility & Easy operation with large full dot LCD display and large touch panel!
Remote controller can be removed from indoor unit and installed in living room.

Key Points:
Full large dot LCD screen (3,5 inch): High resolution screen with backlight, easy set up, check conditions easily, flat, innovative design, temperature sensor included in controller.

Function for installer:
- Floor heating concrete dry mode: Allows for a slow increase in temperature of underfloor heating via software.
- Heating and Cooling Mode: Authorised PRO Partners can enable the cooling mode through a special operation via the remote controller on site
- Installer can select delta T. Water pump speed is selected automatically due to this setting

Function for End User:
- Auto Mode: Automatically changes from heating to cooling depending on outdoor temperature.
- Energy Consumption Display: Displays the heat pump's energy consumption, split by heating, cooling and domestic hot water, showing the total consumption figure.
- Holiday Mode: Enables the system to resume at the preset temperature after your holiday

Cascade Controller PAW-A2W-CMH

Cascade up to 10 Aquarea J or H Generation*.
- Up to 10 HP (working hour balancing)
- 3x M-BUS devices connectable (for heat meter and/or current meter)
- Demand PV functions (similar to HPM + 0-10 V demand signal control function)
- Can control 3 way valves for cooling (2 buffer tanks)
- MODBUS IP for BMS communication
- DHW control logic
- Touch display with information about the HP
- All components in one case

* Requires 1 PAW-AW-MBS-H per each Aquarea.

Model name	Interface
PAW-AW-KNX-H	KNX Interface for J and H Generation
PAW-AW-MBS-H	Modbus Interface for J and H Generation
PAW-AW-KNX-1i	KNX interface (not compatible with J and H Generation)
PAW-AW-MBS-1	Modbus interface (not compatible with J and H Generation)

Model name	Interface
PAW-A2W-CMH	Cascade controller.
CZ-TAW1	Aquarea Smart Cloud, internet control through wireless or wired LAN for Aquarea J and H generation

Aquarea + PV Panels

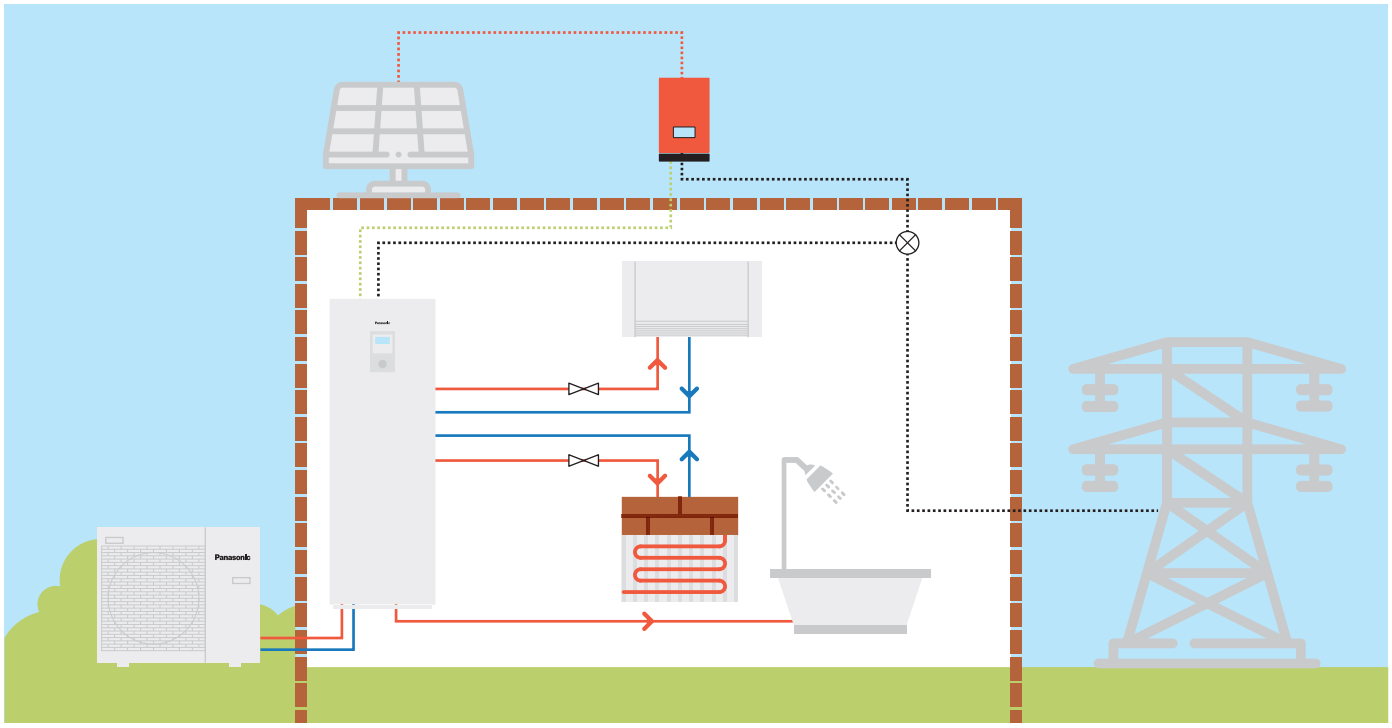

Aquarea heat pumps are designed with the future in mind. They can synchronise with PV panels with simple CZ-NS4P PCB. Thanks to this feature, demand of heating, cooling and domestic hot water production is adapted to the PV panel production.

A part of converting Aquarea in Smart Grid ready, the additional PCB allows 0-10V control, for and advanced energy management.

How Panasonic contributes to Nearly Zero Energy Buildings (NZEB)

Panasonic is committed to develop products with greater energy efficiency.
Our expertise gained over the years has helped to launch a range of products that contribute to a more carbon-free society.
Highly efficient Panasonic solutions can help to significantly reduce the energy consumption of the house:
· Aquarea High performance heat pump for heating, cooling and domestic hot water production
· Aquarea Smart Cloud, for energy monitoring
· Heat recovery ventilation system
· PV panels to produce renewable energy on-site

H3 Grande Passive House, Poland.
When looking for a energy-efficient heating solution, Polish construction company Procyon selected a 5 kW Panasonic Aquarea High Performance heat pump for its passive house project, H3 Grande. Procyon found this solution reduced annual heating expenses by almost half compared to an oil-based system, or by 10 % in comparison to natural gas.
H3 Grande is a 175 m² detached house certified by the Passive House Institute (PHI) in Darmstadt. It is designed to minimise energy losses while incorporating an attractive, yet simple aesthetic. The building's shape, interior design and pitched roof contribute to the energy balance of the house, while large south-facing windows and wall insulation provide passive thermal comfort by retaining heat. The building has very low heating demand of approximately 15 kW/m² and is designed to minimise energy.

Panasonic PRO Club makes your life easier. All Aquarea design tools can be found there

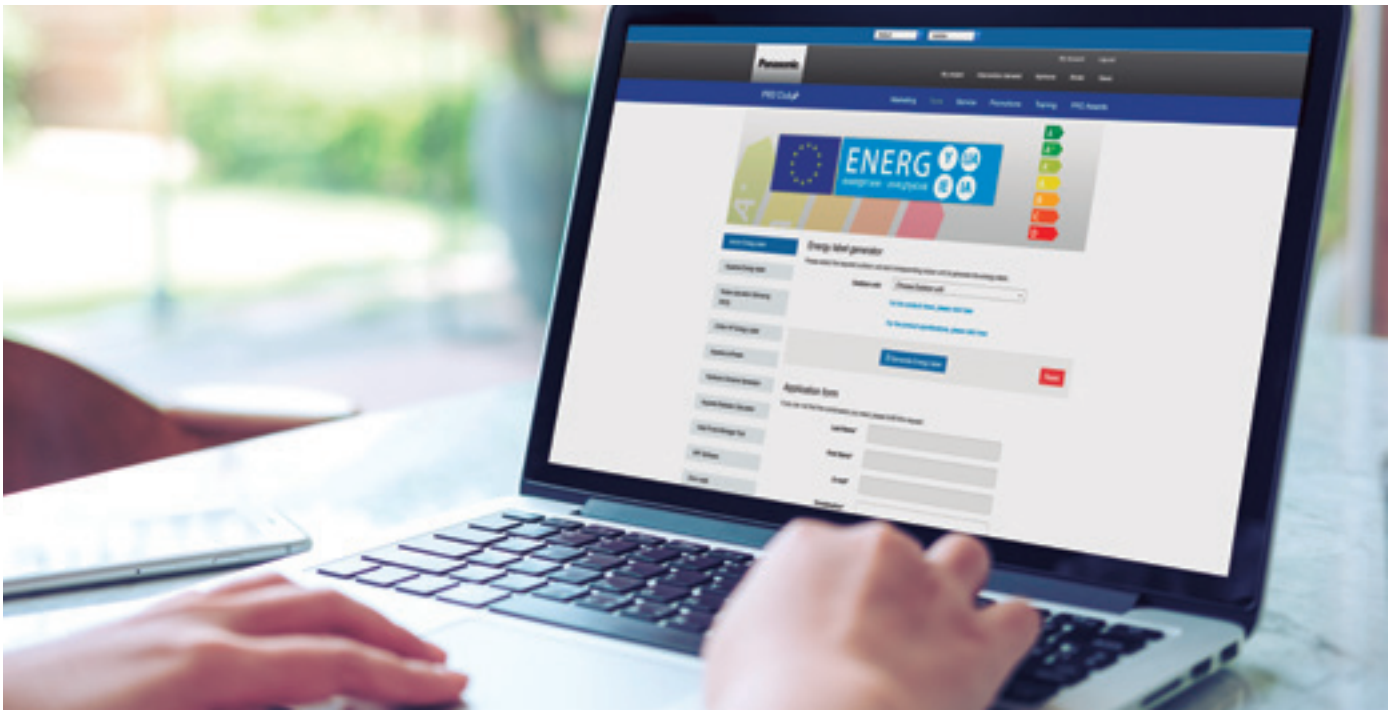

Energy Label

Fridges, dishwashers, washing machines, ovens – it all started with white goods in the 1990s. Today, other energy-consuming appliances also carry the European energy efficiency label, such as televisions and lighting. From 2013, the regulations applied to air conditioners and heat pumps but since September 2015, it has also been applicable to room heaters, water heaters and storage water heaters.
Minimum energy efficiency requirements are also specified for manufacturers of system and combi boilers, water heaters and DHW cylinders.
The purpose of Energy Labels are to assist consumers in their purchasing decisions, as well as ecodesign requirements on products whcih help reduce private energy demand and help to reduce global warming.

Panasonic helps you to calculate the system label.
From 26th September 2015, installers can be assured that all products manufactured after this date will be sold with the required energy efficiency labels which will aid installers with their paperwork. While it is the manufacturer's responsibility to issue their products with the required labels, the installers will need to calculate and issue an energy efficiency label for the entire heating system. Whether installing a new heating system or installing new boilers, controls or renewables into an existing system, it is, and will continue to be, the installer's responsibility to calculate and issue energy efficiency labels. Calculators which assist installers with this process are available on www.panasonicproclub.com.

Information on the energy efficiency label.
The rating system for heat pumps classifies them into seven efficiency categories. From 26th September 2019, the best energy efficiency category is A+++, least energy efficient is D. The energy efficiency label for system boilers shows its efficiency category on a scale from A+++ to D, and from A+ to F for hot water cylinders.

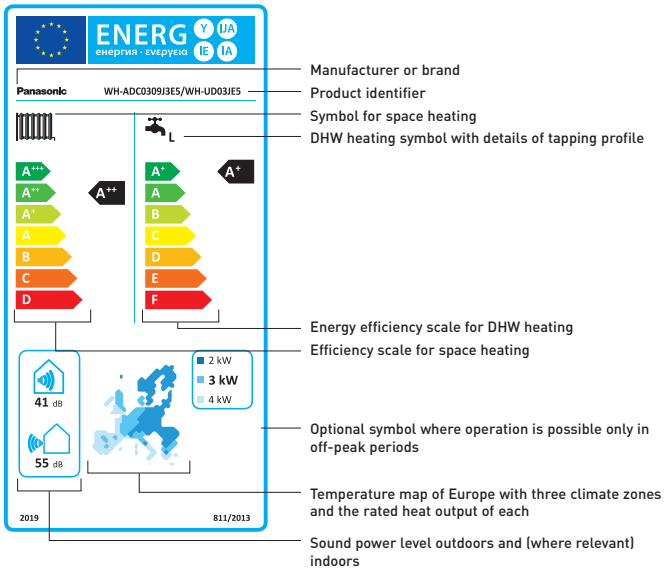

Aquarea design tools

Aquarea Designer

This program allows HVAC designers, installers and distributors to identify the correct heat pump for a particular application from Panasonic's Aquarea range, calculate the savings compared to other heat sources and very quickly calculate CO_2 emissions.
Using Panasonic's Aquarea Designer, projects can be developed simply and easily, by either using the Quick Design or Expert Design options. Each allows the user to build up the project data in a simple step-by-step process and choose to output reports (project data input includes: either Quick or Large formats) as HTML files or as print-outs. To create these useful reports, project data is input, including:

- Heated area
- Heating requirement
- Heating flow and return temperatures
- Climate data (from a simple drop-down menu) including outdoor temperature
- Type of hot water tank, storage capacity and hot water target temperature

Aquarea Designer also means saving

Aquarea Designer will calculate the project's energy costs in terms of hot water, heating and pumping. It will show the equipment running times and calculate the COP (coefficient of performance). It then allows the designer to show clients a comparison with other equipment options such as heating by conventional gas-fired boilers, oil systems, wood, standard electric heating and electric night storage heaters. This compares running costs, initial investment costs and maintenance costs. The comparison can also be made for CO_2 emissions and savings.

Panasonic provides bespoke software helping system designers, installers and dealers to very quickly design and size systems, create wiring diagrams and issue bills of quantities at the push of a button.

Heating demand calculator

This software can quickly and easily determine the heating requirements for the rooms in a project. The Heating demand calculator will help determine approximately how much power is needed to heat each room individually. The result in kilowatts will help you choose the space heater best suited to your needs.

CAD images and spec texts

In order to add value in the design of projects, Panasonic has a wide library of 2D CAD, BIM objects (Building Information Modeling) and Spec texts to be used in Revit.

Hydraulic scheme generator

This tool allows costumers to select the scheme between more than 110 different type according to their installation requirements in a simple way. It possible to download hydraulic and electric part in pdf and in cad file. Moreover it is available a list, one for each scheme type, with the Panasonic codes and third party codes that the costumers need to realize the installation in a proper way.

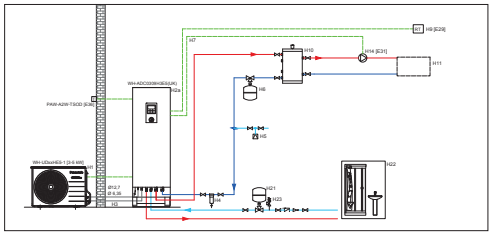

Panasonic has an impressive range of support services for designers, specifiers, engineers and distributors working in air-to-water heat pump projects.

All the support tools are available in Panasonic PRO Club (www.panasonicproclub.com).
Among many others, these are the main tools for the design of Aquarea projects.

Panasonic helps you to calculate the system label www.panasonicproclub.com or connect simply with your smartphone to the PRO Club using this QR.

PRO Club

Aquarea Heat Pumps Line-Up

		3 kW	5 kW	7 kW
Aquarea High Performance **P. 48, 52, 53**	**All in One** 1 Phase 3 Phase	 WH-ADC0309J3E5 WH-ADC0309J3E5B WH-UD03JE5 WH-ADC0309H3E5 WH-ADC0309H3E5B WH-UD03HE5-1	 WH-ADC0309J3E5 WH-ADC0309J3E5B WH-UD05JE5 WH-ADC0309H3E5 WH-ADC0309H3E5B WH-UD05HE5-1	 WH-ADC0309J3E5 WH-ADC0309J3E5B WH-UD07JE5 WH-ADC0309H3E5 WH-ADC0309H3E5B WH-UD07HE5-1
P. 49	**NEW** **All in One Compact** 1 Phase	 WH-ADC0309J3E5C [1] WH-UD03JE5	 WH-ADC0309J3E5C [1] WH-UD05JE5	 WH-ADC0309J3E5C [1] WH-UD07JE5
P. 50, 56, 57	**Bi-bloc** 1 Phase 3 Phase	 WH-SDC0305J3E5 WH-UD03JE5 WH-SDC03H3E5-1 WH-UD03HE5-1	 WH-SDC0305J3E5 WH-UD05JE5 WH-SDC05H3E5-1 WH-UD05HE5-1	 WH-SDC0709J3E5 WH-UD07JE5 WH-SDC07H3E5-1 WH-UD07HE5-1
P. 51, 60	**Mono-bloc** 1 Phase		 **NEW** WH-MDC05J3E5 [2] WH-MDC05H3E5	 **NEW** WH-MDC07J3E5 [2] WH-MDC07H3E5
Aquarea T-CAP **P. 54, 55**	**All in One** 1 Phase 3 Phase			
P. 58, 59	**Bi-bloc** 1 Phase 3 Phase			
P. 61	**Mono-bloc** 1 Phase 3 Phase			
Aquarea HT **P. 62**	**Bi-bloc** 1 Phase 3 Phase			
P. 63	**Mono-bloc** 1 Phase			

Heating. Cooling. DHW. WH-__E5 1 Phase // WH-__E8 3 Phase. Green references refer to R32 models. 1) Available in Autumn 2020. 2) Available in May 2020.

Check all our certified heat pumps on:
www.heatpumpkeymark.com

9 kW	12 kW	16 kW
WH-ADC0309J3E5 WH-ADC0309J3E5B WH-UD09JE5-1 WH-ADC0309H3E5 WH-ADC0309H3E5B WH-UD09HE5-1 WH-ADC0916H9E8 WH-UD09HE8	WH-ADC1216H6E5 WH-UD12HE5 WH-ADC0916H9E8 WH-UD12HE8	WH-ADC1216H6E5 WH-UD16HE5 WH-ADC0916H9E8 WH-UD16HE8
WH-ADC0309J3E5C [1] WH-UD09JE5-1		
WH-SDC0709J3E5 WH-UD09JE5-1 WH-SDC09H3E5-1 WH-UD09HE5-1 WH-SDC09H3E8 WH-UD09HE8	WH-SDC12H6E5 WH-UD12HE5 WH-SDC12H9E8 WH-UD12HE8	WH-SDC16H6E5 WH-UD16HE5 WH-SDC16H9E8 WH-UD16HE8
NEW WH-MDC09J3E5 [2] WH-MDC09H3E5	WH-MDC12H6E5	WH-MDC16H6E5
WH-ADC1216H6E5 WH-UX09HE5 WH-ADC0916H9E8 WH-UX09HE8 WH-ADC0916H9E8 WH-UQ09HE8	WH-ADC1216H6E5 WH-UX12HE5 WH-ADC0916H9E8 WH-UX12HE8 WH-ADC0916H9E8 WH-UQ12HE8	WH-ADC0916H9E8 WH-UX16HE8 WH-ADC0916H9E8 WH-UQ16HE8
WH-SXC09H3E5 WH-UX09HE5 WH-SXC09H3E8 WH-UX09HE8 WH-SQC09H3E8 WH-UQ09HE8	WH-SXC12H6E5 WH-UX12HE5 WH-SXC12H9E8 WH-UX12HE8 WH-SQC12H9E8 WH-UQ12HE8	WH-SXC16H9E8 WH-UX16HE8 WH-SQC16H9E8 WH-UQ16HE8
WH-MXC09H3E5 WH-MXC09H3E8	WH-MXC12H6E5 WH-MXC12H9E8	WH-MXC16H9E8
WH-SHF09F3E5 WH-UH09FE5 WH-SHF09F3E8 WH-UH09FE8	WH-SHF12F6E5 WH-UH12FE5 WH-SHF12F9E8 WH-UH12FE8	
WH-MHF09G3E5	WH-MHF12G6E5	

Aquarea High Performance All in One J Generation Single Phase. Heating and Cooling 1 or 2 zones

• R32 refrigerant

GOOD DESIGN

Technical focus

Top level COP 5,33 — Reduced installation costs — Piping at the bottom of the All in One (easy to install) — Reduced installation time and minimised installation errors — Easy remote controller to set up — Reduced installation spaces — Electrical connections at the front — Easier installation and maintenance — Remote controller functions (cooling mode activation possible by software. This activation can only be done by service partner)

A++ ErP 55 °C Scale from A+++ to D | A+++ ErP 35 °C Scale from A+++ to D | A+ DHW Scale from A+ to F

CZ-TAW1
Cloud connection. For user control and installer remote maintenance.

Tentative Data			**Single Phase (Power to indoor)**			
Kit* 1 zone (for 2 zone add B at the end)			**KIT-ADC03JE5**	**KIT-ADC05JE5**	**KIT-ADC07JE5**	**KIT-ADC09JE5-1**
Heating capacity / COP (A +7 °C, W 35 °C)		kW / COP	3,20 / 5,33	5,00 / 5,00	7,00 / 4,76	9,00 / 4,48
Heating capacity / COP (A +7 °C, W 55 °C)		kW / COP	3,20 / 2,81	5,00 / 2,72	7,00 / 2,82	8,95 / 2,78
Heating capacity / COP (A +2 °C, W 35 °C)		kW / COP	3,20 / 3,64	4,20 / 3,18	6,85 / 3,41	7,00 / 3,40
Heating capacity / COP (A +2 °C, W 55 °C)		kW / COP	3,20 / 2,19	4,10 / 1,99	6,20 / 2,21	6,30 / 2,16
Heating capacity / COP (A -7 °C, W 35 °C)		kW / COP	3,30 / 2,80	4,20 / 2,59	5,60 / 2,87	6,12 / 2,78
Heating capacity / COP (A -7 °C, W 55 °C)		kW / COP	3,20 / 1,79	3,55 / 1,71	5,25 / 1,94	5,90 / 1,93
Cooling capacity / EER (A 35 °C, W 7 °C)		kW / EER	3,20 / 3,52	4,50 / 3,00	6,70 / 3,03	8,20 / 2,72
Cooling capacity / EER (A 35 °C, W 18 °C)		kW / EER	3,20 / 4,85	4,80 / 4,29	6,70 / 4,72	9,00 / 4,18
Seasonal energy efficiency - Heating average climate (W35 °C / W55 °C)		ηs %	200 / 136	200 / 136	193 / 130	193 / 130
		SCOP	5,07 / 3,47	5,07 / 3,47	4,90 / 3,32	4,90 / 3,32
Energy class heating average climate (W35 °C / W55 °C) [1]		A+++ to D	A+++ / A++	A+++ / A++	A+++ / A++	A+++ / A++
Seasonal energy efficiency - Heating warm climate (W35 °C / W55 °C)		ηs %	245 / 165	245 / 165	227 / 160	227 / 160
		SCOP	6,20 / 4,20	6,20 / 4,20	5,75 / 4,07	5,75 / 4,07
Energy class heating warm climate (W35 °C / W55 °C) [1]		A+++ to D	A+++ / A+++	A+++ / A+++	A+++ / A+++	A+++ / A+++
Seasonal energy efficiency - Heating cold climate (W35 °C / W55 °C)		ηs %	157 / 110	157 / 110	164 / 116	164 / 116
		SCOP	4,00 / 2,83	4,00 / 2,83	4,18 / 2,98	4,18 / 2,98
Energy class heating cold climate (W35 °C / W55 °C) [1]		A+++ to D	A++ / A+	A++ / A+	A++ / A+	A++ / A+
Indoor unit 1 zone hydrokit			**WH-ADC0309J3E5**	**WH-ADC0309J3E5**	**WH-ADC0309J3E5**	**WH-ADC0309J3E5**
Indoor unit 2 zones built-in hydrokit			**WH-ADC0309J3E5B**	**WH-ADC0309J3E5B**	**WH-ADC0309J3E5B**	**WH-ADC0309J3E5B**
Sound pressure	Heat / Cool	dB(A)	28 / 28	28 / 28	28 / 28	28 / 28
Dimension	H x W x D	mm	1800 x 598 x 717	1800 x 598 x 717	1800 x 598 x 717	1800 x 598 x 717
Net weight 1 zone / 2 zones		kg	122 / 130	122 / 130	122 / 130	122 / 130
Water pipe connector		Inch	R 1¼	R 1¼	R 1¼	R 1¼
A class pump	Number of speeds		Variable Speed	Variable Speed	Variable Speed	Variable Speed
	Input power (Min / Max)	W	30 / 120	30 / 120	30 / 120	30 / 120
Heating water flow (ΔT=5 K. 35 °C)		L/min	9,20	14,30	20,10	25,80
Capacity of integrated electric heater		kW	3,00	3,00	3,00	3,00
Recommended fuse		A	16 / 16	16 / 16	25 / 16	25 / 16
Recommended cable size, supply 1 / 2		mm²	3 x 1,5 / 3 x 1,5	3 x 1,5 / 3 x 1,5	3 x 2,5 / 3 x 1,5	3 x 2,5 / 3 x 1,5
Water volume		L	185	185	185	185
Maximum water temperature		°C	65	65	65	65
Material inside tank			Stainless steel	Stainless steel	Stainless steel	Stainless steel
Tapping profile according EN16147			L	L	L	L
DHW tank ERP average climate efficiency rating [2]		A+ to F	A+	A+	A+	A+
DHW tank ERP warm climate efficiency rating [2]		A+ to F	A+	A+	A+	A+
DHW tank ERP cold climate efficiency rating [2]		A+ to F	A	A	A	A
DHW tank ERP average climate η / SCOP		ηwh % / SCOP	132 / 3,30	132 / 3,30	120 / 3,00	120 / 3,00
DHW tank ERP warm climate η / SCOP		ηwh % / SCOP	155 / 3,88	155 / 3,88	140 / 3,50	140 / 3,50
DHW tank ERP cold climate η / SCOP		ηwh % / SCOP	99 / 2,48	99 / 2,48	99 / 2,47	99 / 2,47
Outdoor unit			**WH-UD03JE5**	**WH-UD05JE5**	**WH-UD07JE5**	**WH-UD09JE5-1**
Sound power part load [3]	Heat	dB(A)	55	55	59	59
Sound power full load	Heat / Cool	dB(A)	60 / 61	64 / 64	68 / 67	69 / 69
Dimension / Net weight	H x W x D	mm / kg	622 x 824 x 298 / 37	622 x 824 x 298 / 37	795 x 875 x 320 / 61	795 x 875 x 320 / 61
Refrigerant (R32) / CO_2 Eq.		kg / T	0,9 / 0,608	0,9 / 0,608	1,27 / 0,857	1,27 / 0,857
Pipe diameter	Liquid / Gas	Inch (mm)	1/4 (6,35) / 1/2 (12,70)	1/4 (6,35) / 1/2 (12,70)	1/4 (6,35) / 5/8 (15,88)	1/4 (6,35) / 5/8 (15,88)
Pipe length range / Elevation difference (in/out)		m / m	3 ~ 25 / 20	3 ~ 25 / 20	3 ~ 50 / 30	3 ~ 50 / 30
Pipe length for additional gas / Additional gas amount		m / g/m	10 / 20	10 / 20	10 / 25	10 / 25
Operation range	Outdoor ambient	°C	-20 ~ +35	-20 ~ +35	-20 ~ +35	-20 ~ +35
Water outlet	Heat / Cool	°C	20 ~ 60 / 5 ~ 20	20 ~ 60 / 5 ~ 20	20 ~ 60 / 5 ~ 20	20 ~ 60 / 5 ~ 20

Accessories (optional)	
PAW-ADC-PREKIT-1	Piping pre installation kit for J Generation
PAW-ADC-CV150	Decorative magnetic side cover
CZ-TAW1	Aquarea Smart Cloud for remote control and maintenance through wireless or wired LAN

Accessories (optional)	
CZ-NS4P	Additional functions PCB
PAW-A2W-RTWIRED	Room thermostat
PAW-A2W-RTWIRELESS	Wireless LCD room thermostat

1) Scale from A+++ to D. 2) Scale from A+ to F. 3) Sound power in accordance to 8112013,81312013 and EN12102-1:2017 at +7 °C.
EER and COP calculation is based in accordance to EN14511.
This product is designed to comply with the European Water Quality Directive 98/83/EC amended by 2015/1787/EU. The lifespan of the product is not guaranteed in the case of the use of groundwater, such as spring water or well water, the use of tap water when salt or other impurities are contained, nor in areas of acidic water quality. Maintenance and warranty costs related to these cases are the customer's responsibility.

R32 | A++ ErP 55°C | A+++ ErP 35°C | A+ DHW | INVERTER+ | A CLASS WATER PUMP AUTO SPEED | 5,33 COP HIGH PERFORMANCE | DHW | -20°C HEATING MODE | WATER FILTER WITH MAGNET | 60°C OUTPUT WATER FLOW TEMPERATURE | FLOW SENSOR | BOILER CONNECTION | ADVANCED CONTROL | OPTIONAL WLAN | BMS CONNECTIVITY | 5 YEARS COMPRESSOR WARRANTY

INTERNET CONTROL: Optional. GOOD DESIGN AWARD 2017: Indoor units All in One and Bi-bloc H Generation awarded with the prestigious Good Design Award 2017.

New Aquarea High Performance All in One Compact J Generation Single Phase. Heating and Cooling

• R32 refrigerant

NEW 2020

Technical focus

Top level COP 5,33 — 598 x 600 mm footprint — Reduced installation costs — Reduced installation time and minimised installation errors — Easy remote controller to set up — Reduced installation spaces — Electrical connections at the front — Easier installation and maintenance — Remote controller functions (cooling mode activation possible by software. This activation can only be done by service partner)

CZ-TAW1
Cloud connection. For user control and installer remote maintenance.

			Single Phase (Power to indoor)			
Kit			**KIT-ADC03JE5C**	**KIT-ADC05JE5C**	**KIT-ADC07JE5C**	**KIT-ADC09JE5C-1**
Heating capacity / COP (A +7 °C, W 35 °C)		kW / COP	3,20 / 5,33	5,00 / 5,00	7,00 / 4,76	9,00 / 4,48
Heating capacity / COP (A +7 °C, W 55 °C)		kW / COP	3,20 / 2,81	5,00 / 2,72	7,00 / 2,82	8,95 / 2,78
Heating capacity / COP (A +2 °C, W 35 °C)		kW / COP	3,20 / 3,64	4,20 / 3,18	6,85 / 3,41	7,00 / 3,40
Heating capacity / COP (A +2 °C, W 55 °C)		kW / COP	3,20 / 2,19	4,10 / 1,99	6,20 / 2,21	6,30 / 2,16
Heating capacity / COP (A -7 °C, W 35 °C)		kW / COP	3,30 / 2,80	4,20 / 2,59	5,60 / 2,87	6,12 / 2,78
Heating capacity / COP (A -7 °C, W 55 °C)		kW / COP	3,20 / 1,79	3,55 / 1,71	5,25 / 1,94	5,90 / 1,93
Cooling capacity / EER (A 35 °C, W 7 °C)		kW / EER	3,20 / 3,52	4,50 / 3,00	6,70 / 3,03	8,20 / 2,72
Cooling capacity / EER (A 35 °C, W 18 °C)		kW / EER	3,20 / 4,85	4,80 / 4,29	6,70 / 4,72	9,00 / 4,18
Seasonal energy efficiency - Heating average climate (W35 °C / W55 °C)		ηs %	200 / 136	200 / 136	193 / 130	193 / 130
		SCOP	5,07 / 3,47	5,07 / 3,47	4,90 / 3,32	4,90 / 3,32
Energy class heating average climate (W35 °C / W55 °C) [1]		A+++ to D	A+++ / A++	A+++ / A++	A+++ / A++	A+++ / A++
Seasonal energy efficiency - Heating warm climate (W35 °C / W55 °C)		ηs %	245 / 165	245 / 165	227 / 160	227 / 160
		SCOP	6,20 / 4,20	6,20 / 4,20	5,75 / 4,07	5,75 / 4,07
Energy class heating warm climate (W35 °C / W55 °C) [1]		A+++ to D	A+++ / A+++	A+++ / A+++	A+++ / A+++	A+++ / A+++
Seasonal energy efficiency - Heating cold climate (W35 °C / W55 °C)		ηs %	157 / 110	157 / 110	164 / 116	164 / 116
		SCOP	4,00 / 2,83	4,00 / 2,83	4,18 / 2,98	4,18 / 2,98
Energy class heating cold climate (W35 °C / W55 °C) [1]		A+++ to D	A++ / A+	A++ / A+	A++ / A+	A++ / A+
Indoor unit			**WH-ADC0309J3E5C**	**WH-ADC0309J3E5C**	**WH-ADC0309J3E5C**	**WH-ADC0309J3E5C**
Sound pressure	Heat / Cool	dB(A)	28 / 28	28 / 28	28 / 28	28 / 28
Dimension	H x W x D	mm	1650 x 598 x 600	1650 x 598 x 600	1650 x 598 x 600	1650 x 598 x 600
Net weight 1 zone / 2 zones		kg	—	—	—	—
Water pipe connector		Inch	R 1¼	R 1¼	R 1¼	R 1¼
A class pump	Number of speeds		Variable Speed	Variable Speed	Variable Speed	Variable Speed
	Input power (Min / Max)	W	30 / 120	30 / 120	30 / 120	30 / 120
Heating water flow (ΔT=5 K. 35 °C)		L/min	9,20	14,30	20,10	25,80
Capacity of integrated electric heater		kW	3,00	3,00	3,00	3,00
Recommended fuse		A	16 / 16	16 / 16	25 / 16	25 / 16
Recommended cable size, supply 1 / 2		mm²	3 x 1,5 / 3 x 1,5	3 x 1,5 / 3 x 1,5	3 x 2,5 / 3 x 1,5	3 x 2,5 / 3 x 1,5
Water volume		L	185	185	185	185
Maximum water temperature		°C	65	65	65	65
Material inside tank			Stainless steel	Stainless steel	Stainless steel	Stainless steel
Tapping profile according EN16147			L	L	L	L
DHW tank ERP average climate efficiency rating [2]		A+ to F	A+	A+	A+	A+
DHW tank ERP warm climate efficiency rating [2]		A+ to F	A+	A+	A+	A+
DHW tank ERP cold climate efficiency rating [2]		A+ to F	A	A	A	A
DHW tank ERP average climate η / SCOP		ηwh % / SCOP	132 / 3,30	132 / 3,30	120 / 3,00	120 / 3,00
DHW tank ERP warm climate η / SCOP		ηwh % / SCOP	155 / 3,88	155 / 3,88	140 / 3,50	140 / 3,50
DHW tank ERP cold climate η / SCOP		ηwh % / SCOP	99 / 2,48	99 / 2,48	99 / 2,47	99 / 2,47
Outdoor unit			**WH-UD03JE5**	**WH-UD05JE5**	**WH-UD07JE5**	**WH-UD09JE5-1**
Sound power part load [3]	Heat	dB(A)	55	55	59	59
Sound power full load	Heat / Cool	dB(A)	60 / 61	64 / 64	68 / 67	69 / 69
Dimension / Net weight	H x W x D	mm / kg	622 x 824 x 298 / 37	622 x 824 x 298 / 37	795 x 875 x 320 / 61	795 x 875 x 320 / 61
Refrigerant (R32) / CO_2 Eq.		kg / T	0,9 / 0,608	0,9 / 0,608	1,27 / 0,857	1,27 / 0,857
Pipe diameter	Liquid / Gas	Inch (mm)	1/4 (6,35) / 1/2 (12,70)	1/4 (6,35) / 1/2 (12,70)	1/4 (6,35) / 5/8 (15,88)	1/4 (6,35) / 5/8 (15,88)
Pipe length range / Elevation difference (in/out)		m / m	3 ~ 25 / 20	3 ~ 25 / 20	3 ~ 50 / 30	3 ~ 50 / 30
Pipe length for additional gas / Additional gas amount		m / g/m	10 / 20	10 / 20	10 / 25	10 / 25
Operation range	Outdoor ambient	°C	-20 ~ +35	-20 ~ +35	-20 ~ +35	-20 ~ +35
Water outlet	Heat / Cool	°C	20 ~ 60 / 5 ~ 20	20 ~ 60 / 5 ~ 20	20 ~ 60 / 5 ~ 20	20 ~ 60 / 5 ~ 20

Tentative data

Accessories (optional)	
CZ-TAW1	Aquarea Smart Cloud for remote control and maintenance through wireless or wired LAN
CZ-NS4P	Additional functions PCB

Accessories (optional)	
PAW-A2W-RTWIRED	Room thermostat
PAW-A2W-RTWIRELESS	Wireless LCD room thermostat

1) Scale from A+++ to D. 2) Scale from A+ to F. 3) Sound power in accordance to 8112013,81312013 and EN12102-1:2017 at +7 °C.
EER and COP calculation is based in accordance to EN14511. * Available in Autumn 2020.
This product is designed to comply with the European Water Quality Directive 98/83/EC amended by 2015/1787/EU. The lifespan of the product is not guaranteed in the case of the use of groundwater, such as spring water or well water, the use of tap water when salt or other impurities are contained, nor in areas of acidic water quality. Maintenance and warranty costs related to these cases are the customer's responsibility.

INTERNET CONTROL: Optional.

Aquarea High Performance Bi-bloc J Generation Single Phase. Heating and Cooling - SDC • R32 refrigerant

GOOD DESIGN

Technical focus

Super efficient in the 3,2 kW! — Very high energy savings A+++ — Simple installation & maintenance — Special software for low consumption homes with minimum output temperature: 20 °C — Works at temperatures as low as -20 °C — Automatic Air purge valve — Display of the compressor frequency

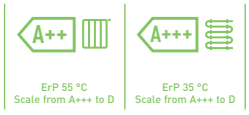

CZ-TAW1
Cloud connection. For user control and installer remote maintenance.

			Single Phase (Power to indoor)			
Kit			**KIT-WC03J3E5**	**KIT-WC05J3E5**	**KIT-WC07J3E5**	**KIT-WC09J3E5**
Heating capacity / COP (A +7 °C, W 35 °C)		kW / COP	3,20 / 5,33	5,00 / 5,00	7,00 / 4,76	9,00 / 4,48
Heating capacity / COP (A +7 °C, W 55 °C)		kW / COP	3,20 / 2,81	5,00 / 2,72	7,00 / 2,82	8,95 / 2,78
Heating capacity / COP (A +2 °C, W 35 °C)		kW / COP	3,20 / 3,64	4,20 / 3,18	6,85 / 3,41	7,00 / 3,40
Heating capacity / COP (A +2 °C, W 55 °C)		kW / COP	3,20 / 2,19	4,10 / 1,99	6,20 / 2,21	6,30 / 2,16
Heating capacity / COP (A -7 °C, W 35 °C)		kW / COP	3,30 / 2,80	4,20 / 2,59	5,60 / 2,87	6,12 / 2,78
Heating capacity / COP (A -7 °C, W 55 °C)		kW / COP	3,20 / 1,79	3,55 / 1,71	5,25 / 1,94	5,90 / 1,93
Cooling capacity / EER (A 35 °C, W 7 °C)		kW / EER	3,20 / 3,52	4,50 / 3,00	6,70 / 3,03	8,20 / 2,72
Cooling capacity / EER (A 35 °C, W 18 °C)		kW / EER	3,20 / 4,85	4,80 / 4,29	6,70 / 4,72	9,00 / 4,18
Seasonal energy efficiency - Heating average climate (W35 °C / W55 °C)		ηs %	200 / 136	200 / 136	193 / 130	193 / 130
		SCOP	5,07 / 3,47	5,07 / 3,47	4,90 / 3,32	4,90 / 3,32
Energy class heating average climate (W35 °C / W55 °C)		A+++ to D	A+++ / A++	A+++ / A++	A+++ / A++	A+++ / A++
Seasonal energy efficiency - Heating warm climate (W35 °C / W55 °C)		ηs %	245 / 165	245 / 165	227 / 160	227 / 160
		SCOP	6,20 / 4,20	6,20 / 4,20	5,75 / 4,07	5,75 / 4,07
Energy class heating warm climate (W35 °C / W55 °C)		A+++ to D	A+++ / A+++	A+++ / A+++	A+++ / A+++	A+++ / A+++
Seasonal energy efficiency - Heating cold climate (W35 °C / W55 °C)		ηs %	157 / 110	157 / 110	164 / 116	164 / 116
		SCOP	4,00 / 2,83	4,00 / 2,83	4,18 / 2,98	4,18 / 2,98
Energy class heating cold climate (W35 °C / W55 °C)		A+++ to D	A++ / A+	A++ / A+	A++ / A+	A++ / A+
Indoor unit			**WH-SDC0305J3E5**	**WH-SDC0305J3E5**	**WH-SDC0709J3E5**	**WH-SDC0709J3E5**
Sound pressure	Heat / Cool	dB(A)	28 / 28	28 / 28	30 / 30	30 / 31
Dimension	H x W x D	mm	892 x 500 x 340	892 x 500 x 340	892 x 500 x 340	892 x 500 x 340
Net weight		kg	42	42	42	42
Water pipe connector		Inch	R 1¼	R 1¼	R 1¼	R 1¼
A class pump	Number of speeds		Variable Speed	Variable Speed	Variable Speed	Variable Speed
	Input power (Min / Max)	W	30 / 100	33 / 106	34 / 114	40 / 120
Heating water flow (ΔT=5 K. 35 °C)		L/min	9,2	14,3	20,1	25,8
Capacity of integrated electric heater		kW	3	3	3	3
Recommended fuse		A	15 / 30	15 / 30	15 / 30	15 / 30
Recommended cable size, supply 1 / 2		mm²	3 x 1,5 / 3 x 1,5	3 x 1,5 / 3 x 1,5	3 x 2,5 / 3 x 1,5	3 x 2,5 / 3 x 1,5
Outdoor unit			**WH-UD03JE5**	**WH-UD05JE5**	**WH-UD07JE5**	**WH-UD09JE5-1**
Sound power part load [1]	Heat	dB(A)	55	55	59	59
Sound power full load	Heat / Cool	dB(A)	60 / 61	64 / 64	68 / 67	69 / 69
Dimension	H x W x D	mm	622 x 824 x 298	622 x 824 x 298	795 x 875 x 320	795 x 875 x 320
Net weight		kg	37	37	61	61
Refrigerant (R32) / CO_2 Eq.		kg / T	0,9 / 0,608	0,9 / 0,608	1,27 / 0,857	1,27 / 0,857
Pipe diameter	Liquid / Gas	Inch (mm)	1/4 (6,35) / 1/2 (12,70)	1/4 (6,35) / 1/2 (12,70)	1/4 (6,35) / 5/8 (15,88)	1/4 (6,35) / 5/8 (15,88)
Pipe length range		m	3 ~ 25	3 ~ 25	3 ~ 50	3 ~ 50
Elevation difference (in/out)		m	20	20	30	30
Pipe length for additional gas		m	10	10	10	10
Additional gas amount		g/m	20	20	25	25
Operation range	Outdoor ambient	°C	-20 ~ +35	-20 ~ +35	-20 ~ +35	-20 ~ +35
Water outlet	Heat / Cool	°C	20 ~ 60 / 5 ~ 20	20 ~ 60 / 5 ~ 20	20 ~ 60 / 5 ~ 20	20 ~ 60 / 5 ~ 20

Accessories (optional)	
PAW-TD20C1E5-1	Tank 200L - Stainless steel
PAW-TD30C1E5-1	Tank 300L - Stainless steel
PAW-TA20C1E5STD-1	Tank 200L - Enamelled
PAW-TA30C1E5STD-1	Tank 300L - Enamelled
PAW-3WYVLV-HW	3 way valve for DHW Tanks
CZ-NV1	3 way valve kit for inside of hydrokit

Accessories (optional)	
CZ-NS4P	Additional functions PCB
PAW-BTANK50L-2	Buffer tank 50L
CZ-TAW1	Aquarea Smart Cloud for remote control and maintenance through wireless or wired LAN
PAW-A2W-RTWIRED	Room thermostat
PAW-A2W-RTWIRELESS	Wireless LCD room thermostat

1) Sound power in accordance to 8112013,81312013 and EN12102-1:2017 at +7 °C.
EER and COP calculation is based in accordance to EN14511.

INTERNET CONTROL: Optional. GOOD DESIGN AWARD 2017: Indoor units All in One and Bi-bloc H Generation awarded with the prestigious Good Design Award 2017.

New Aquarea High Performance Mono-bloc J Generation Single Phase. Heating and Cooling - MDC

• R32 refrigerant

NEW 2020

Technical focus

Optional Smartphone control — Maximum hydraulic module output temperature: 60 °C — High heating and cooling capacities, even at low outdoor temperatures, temperature range 5 ~ 20 °C — Works at temperatures as low as -20 °C — Operation in cooling mode at temperatures as low as 10 °C — Built-in magnet filter for easy installation

CZ-TAW1
Cloud connection. For user control and installer remote maintenance.

			Single Phase Heating and Cooling		
Outdoor unit			**WH-MDC05J3E5**	**WH-MDC07J3E5**	**WH-MDC09J3E5**
Heating capacity / COP (A +7 °C, W 35 °C)		kW / COP	5,00 / 5,08	7,00 / 4,76	9,00 / 4,48
Heating capacity / COP (A +7 °C, W 55 °C)		kW / COP	5,00 / 3,01	7,00 / 2,82	8,95 / 2,78
Heating capacity / COP (A +2 °C, W 35 °C)		kW / COP	5,00 / 3,57	7,00 / 3,40	7,45 / 3,13
Heating capacity / COP (A +2 °C, W 55 °C)		kW / COP	5,00 / 2,27	6,30 / 2,16	7,00 / 2,12
Heating capacity / COP (A -7 °C, W 35 °C)		kW / COP	5,00 / 2,78	6,80 / 2,81	7,50 / 2,63
Heating capacity / COP (A -7 °C, W 55 °C)		kW / COP	5,00 / 1,85	6,30 / 1,86	7,00 / 1,80
Cooling capacity / EER (A 35 °C, W 7 °C)		kW / EER	5,00 / 3,31	7,00 / 3,06	9,00 / 2,71
Cooling capacity / EER (A 35 °C, W 18 °C)		kW / EER	5,00 / 5,05	7,00 / 4,73	9,00 / 4,25
Seasonal energy efficiency - Heating average climate (W35 °C / W55 °C)		ηs %	202 / 142	193 / 130	193 / 130
		SCOP	5,12 / 3,63	4,90 / 3,32	4,90 / 3,32
Energy class heating average climate (W35 °C / W55 °C)		A+++ to D	A+++ / A++	A+++ / A++	A+++ / A++
Seasonal energy efficiency - Heating warm climate (W35 °C / W55 °C)		ηs %	237 / 165	227 / 160	227 / 160
		SCOP	6,00 / 4,20	5,75 / 4,07	5,75 / 4,07
Energy class heating warm climate (W35 °C / W55 °C)		A+++ to D	A+++ / A+++	A+++ / A+++	A+++ / A+++
Seasonal energy efficiency - Heating cold climate (W35 °C / W55 °C)		ηs %	160 / 115	164 / 116	164 / 116
		SCOP	4,08 / 2,95	4,18 / 2,98	4,18 / 2,98
Energy class heating cold climate (W35 °C / W55 °C)		A+++ to D	A++ / A+	A++ / A+	A++ / A+
Sound power part load [1]	Heat	dB(A)	59	59	59
Sound power full load	Heat / Cool	dB(A)	64 / 65	68 / 67	69 / 68
Dimension	H x W x D	mm	865 x 1283 x 320	865 x 1283 x 320	865 x 1283 x 320
Net weight		kg	99	104	104
Refrigerant (R32) / CO_2 Eq. [2]		kg / T	1,3 / 0,878	1,3 / 0,878	1,3 / 0,878
Water pipe connector		Inch	R 1¼	R 1¼	R 1¼
Pump	Number of speeds		Variable Speed	Variable Speed	Variable Speed
	Input power (Min / Max)	W	34 / 96	36 / 100	39 / 108
Heating water flow (ΔT=5 K. 35 °C)		L/min	14,3	20,1	25,8
Capacity of integrated electric heater		kW	3	3	3
Input Power	Heat	kW	0,985	1,47	2,01
	Cool	kW	1,51	2,29	3,32
Running and Starting current	Heat	A	4,7	7,0	9,3
	Cool	A	7,0	10,5	14,7
Current 1		A	12	17	17
Current 2		A	13	13	13
Recommended fuse		A	30 / 15	30 / 15	30 / 16
Recommended cable size, supply 1 / 2		mm²	3 x 1,5 / 3 x 1,5	3 x 2,5 / 3 x 1,5	3 x 2,5 / 3 x 1,5
Operation range (outdoor temperature)	Heat	°C	-20 ~ 35	-20 ~ 35	-20 ~ 35
	Cool	°C	10 ~ 43	10 ~ 43	10 ~ 43
Water outlet	Heat	°C	20 ~ 60	20 ~ 60	20 ~ 60
	Cool	°C	5 ~ 20	5 ~ 20	5 ~ 20

Accessories (optional)	
PAW-TD20C1E5	Tank 200L - Stainless steel
PAW-TD30C1E5	Tank 300L - Stainless steel
PAW-TA20C1E5STD	Tank 200L - Enamelled
PAW-TA30C1E5STD	Tank 300L - Enamelled
PAW-TD20B8E3-1	Combo Tank 185L + 80L - Enamelled
PAW-TD23B6E5	Combo Tank 230L + 60L - Stainless steel

Accessories (optional)	
PAW-3WYVLV-HW	3 way valve for DHW Tanks
PAW-BTANK50L-2	Buffer tank 50L
CZ-TAW1	Aquarea Smart Cloud for remote control and maintenance through wireless or wired LAN
PAW-A2W-RTWIRED	Room thermostat
PAW-A2W-RTWIRELESS	Wireless LCD room thermostat

1) Sound power in accordance to 8112013,81312013 and EN12102-1:2017 at +7 °C. 2) WH-MDC models are hermetically sealed.
EER and COP calculation is based in accordance to EN14511. * Available in May 2020.

INTERNET CONTROL: Optional.

Aquarea High Performance All in One H Generation Single Phase. Heating and Cooling 1 or 2 zones

• R410A refrigerant

GOOD DESIGN

Technical focus

Reduced installation costs — Piping at the bottom of the All in One (easy to install) — Reduced installation time and minimised installation errors — Easy remote controller to set up — Reduced installation spaces — Electrical connections at the front — Easier installation and maintenance — Remote controller functions (cooling mode activation possible by software. This activation can only be done by service partner)

CZ-TAW1
Cloud connection. For user control and installer remote maintenance.

			Single Phase (Power to indoor)			
Kit 1 zone (for 2 zone add B at the end)			**KIT-ADC03HE5**	**KIT-ADC05HE5**	**KIT-ADC07HE5**	**KIT-ADC09HE5**
Heating capacity / COP (A +7 °C, W 35 °C)		kW / COP	3,20 / 5,00	5,00 / 4,63	7,00 / 4,46	9,00 / 4,13
Heating capacity / COP (A +7 °C, W 55 °C)		kW / COP	3,20 / 2,67	5,00 / 2,65	6,80 / 2,63	8,90 / 2,41
Heating capacity / COP (A +2 °C, W 35 °C)		kW / COP	3,20 / 3,56	4,20 / 3,11	6,55 / 3,34	6,70 / 3,13
Heating capacity / COP (A +2 °C, W 55 °C)		kW / COP	3,20 / 2,15	4,10 / 1,98	6,00 / 1,99	6,00 / 1,99
Heating capacity / COP (A -7 °C, W 35 °C)		kW / COP	3,20 / 2,69	4,20 / 2,59	5,15 / 2,68	5,90 / 2,52
Heating capacity / COP (A -7 °C, W 55 °C)		kW / COP	3,20 / 1,72	3,55 / 1,71	4,80 / 1,89	5,80 / 1,88
Cooling capacity / EER (A 35 °C, W 7 °C)		kW / EER	3,20 / 3,08	4,50 / 2,69	6,00 / 2,63	7,00 / 2,43
Cooling capacity / EER (A 35 °C, W 18 °C)		kW / EER	3,30 / 3,75	5,00 / 3,76	6,00 / 3,57	7,00 / 3,26
Seasonal energy efficiency - Heating average climate (W35 °C / W55 °C)		ηs %	195 / 130	195 / 130	190 / 130	190 / 130
		SCOP	4,95 / 3,33	4,95 / 3,33	4,83 / 3,33	4,83 / 3,33
Energy class heating average climate (W35 °C / W55 °C) [1]		A+++ to D	A+++ / A++	A+++ / A++	A+++ / A++	A+++ / A++
Seasonal energy efficiency - Heating warm climate (W35 °C / W55 °C)		ηs %	244 / 163	244 / 163	225 / 160	225 / 160
		SCOP	6,18 / 4,15	6,18 / 4,15	5,70 / 4,08	5,70 / 4,08
Energy class heating warm climate (W35 °C / W55 °C) [1]		A+++ to D	A+++ / A+++	A+++ / A+++	A+++ / A+++	A+++ / A+++
Seasonal energy efficiency - Heating cold climate (W35 °C / W55 °C)		ηs %	150 / 103	150 / 103	160 / 115	160 / 115
		SCOP	3,83 / 2,65	3,83 / 2,65	4,08 / 2,95	4,08 / 2,95
Energy class heating cold climate (W35 °C / W55 °C) [1]		A+++ to D	A++ / A+	A++ / A+	A++ / A+	A++ / A+
Indoor unit 1 zone hydrokit			**WH-ADC0309H3E5**	**WH-ADC0309H3E5**	**WH-ADC0309H3E5**	**WH-ADC0309H3E5**
Indoor unit 2 zones built-in hydrokit			**WH-ADC0309H3E5B**	**WH-ADC0309H3E5B**	**WH-ADC0309H3E5B**	**WH-ADC0309H3E5B**
Sound pressure	Heat / Cool	dB(A)	28 / 28	28 / 28	28 / 28	28 / 28
Dimension / Net weight	H x W x D	mm / kg	1800 x 598 x 717 / 124	1800 x 598 x 717 / 124	1800 x 598 x 717 / 124	1800 x 598 x 717 / 124
Water pipe connector		Inch	R 1¼	R 1¼	R 1¼	R 1¼
A class pump	Number of speeds		Variable Speed	Variable Speed	Variable Speed	Variable Speed
	Input power (Min / Max)	W	30 / 120	30 / 120	30 / 120	30 / 120
Heating water flow (ΔT=5 K. 35 °C)		L/min	9,2	14,3	20,1	25,8
Capacity of integrated electric heater		kW	3	3	3	3
Recommended fuse		A	15 / 15	15 / 15	30 / 15	30 / 15
Recommended cable size, supply 1 / 2		mm²	3 x 1,5 / 3 x 1,5	3 x 1,5 / 3 x 1,5	3 x 2,5 / 3 x 1,5	3 x 2,5 / 3 x 1,5
Water volume		L	185	185	185	185
Maximum water temperature		°C	65	65	65	65
Material inside tank			Stainless steel	Stainless steel	Stainless steel	Stainless steel
Tapping profile according EN16147			L	L	L	L
DHW tank ERP average climate efficiency rating [2]		A+ to F	A+	A+	A	A
DHW tank ERP warm climate efficiency rating [2]		A+ to F	A+	A+	A+	A+
DHW tank ERP cold climate efficiency rating [2]		A+ to F	A	A	A	A
DHW tank ERP average climate η / SCOP		ηwh % / SCOP	120 / 3,00	120 / 3,00	113 / 2,83	113 / 2,83
DHW tank ERP warm climate η / SCOP		ηwh % / SCOP	147 / 3,68	147 / 3,68	132 / 3,30	132 / 3,30
DHW tank ERP cold climate η / SCOP		ηwh % / SCOP	94 / 2,35	94 / 2,15	86 / 2,15	86 / 1,88
Outdoor unit			**WH-UD03HE5-1**	**WH-UD05HE5-1**	**WH-UD07HE5-1**	**WH-UD09HE5-1**
Sound power part load [3]	Heat	dB(A)	55	55	59	59
Sound power full load	Heat / Cool	dB(A)	64 / 65	65 / 66	68 / 66	69 / 68
Dimension / Net weight	H x W x D	mm / kg	622 x 824 x 298 / 39	622 x 824 x 298 / 39	795 x 900 x 320 / 66	795 x 900 x 320 / 66
Refrigerant (R410A) / CO_2 Eq.		kg / T	1,20 / 2,506	1,20 / 2,506	1,45 / 3,028	1,45 / 3,028
Pipe diameter	Liquid / Gas	Inch (mm)	1/4 (6,35) / 1/2 (12,70)	1/4 (6,35) / 1/2 (12,70)	1/4 (6,35) / 5/8 (15,88)	1/4 (6,35) / 5/8 (15,88)
Pipe length range / Elevation difference (in/out)		m / m	3 ~ 15 / 5	3 ~ 15 / 5	3 ~ 40 / 30	3 ~ 40 / 30
Pipe length for additional gas / Additional gas amount		m / g/m	10 / 20	10 / 20	10 / 30	10 / 30
Operation range	Outdoor ambient	°C	-20 ~ +35	-20 ~ +35	-20 ~ +35	-20 ~ +35
Water outlet	Heat / Cool	°C	20 ~ 55 / 5 ~ 20	20 ~ 55 / 5 ~ 20	20 ~ 55 / 5 ~ 20	20 ~ 55 / 5 ~ 20

Accessories (optional)	
PAW-ADC-PREKIT-H	Piping pre installation kit for H Generation
PAW-ADC-CV150	Decorative magnetic side cover
CZ-TAW1	Aquarea Smart Cloud for remote control and maintenance through wireless or wired LAN

Accessories (optional)	
CZ-NS4P	Additional functions PCB
PAW-A2W-RTWIRED	Room thermostat
PAW-A2W-RTWIRELESS	Wireless LCD room thermostat

1) Scale from A+++ to D. 2) Scale from A+ to F. 3) Sound power in accordance to 8112013,81312013 and EN12102-1:2017 at +7 °C.
EER and COP calculation is based in accordance to EN14511.
This product is designed to comply with the European Water Quality Directive 98/83/EC amended by 2015/1787/EU. The lifespan of the product is not guaranteed in the case of the use of groundwater, such as spring water or well water, the use of tap water when salt or other impurities are contained, nor in areas of acidic water quality. Maintenance and warranty costs related to these cases are the customer's responsibility.

INTERNET CONTROL: Optional. GOOD DESIGN AWARD 2017: Indoor units All in One and Bi-bloc H Generation awarded with the prestigious Good Design Award 2017.

Aquarea High Performance All in One H Generation Single Phase / Three Phase. Heating and Cooling

• R410A refrigerant

GOOD DESIGN

Technical focus

Reduced installation costs — Piping at the bottom of the All in One (easy to install) — Reduced installation time and minimised installation errors — Easy remote controller to set up — Reduced installation spaces — Electrical connections at the front — Easier installation and maintenance — Remote controller functions (cooling mode activation possible by software. This activation can only be done by service partner)

CZ-TAW1
Cloud connection. For user control and installer remote maintenance.

			Single Phase (Power to indoor)		Three Phase (Power to indoor)		
Kit			**KIT-ADC12HE5**	**KIT-ADC16HE5**	**KIT-ADC09HE8**	**KIT-ADC12HE8**	**KIT-ADC16HE8**
Heating capacity / COP (A +7 °C, W 35 °C)		kW / COP	12,00/4,74	16,00/4,28	9,00/4,84	12,00/4,74	16,00/4,28
Heating capacity / COP (A +7 °C, W 55 °C)		kW / COP	12,00/2,88	14,50/2,68	9,00/2,94	12,00/2,88	14,50/2,68
Heating capacity / COP (A +2 °C, W 35 °C)		kW / COP	11,40/3,44	13,00/3,28	9,00/3,59	11,40/3,44	13,00/3,28
Heating capacity / COP (A +2 °C, W 55 °C)		kW / COP	9,10/2,20	9,80/2,17	8,80/2,23	9,10/2,20	9,80/2,17
Heating capacity / COP (A -7 °C, W 35 °C)		kW / COP	10,00/2,73	11,40/2,57	9,00/2,85	10,00/2,73	11,40/2,57
Heating capacity / COP (A -7 °C, W 55 °C)		kW / COP	8,20/1,92	9,00/1,82	7,90/2,05	8,20/1,92	9,00/1,82
Cooling capacity / EER (A 35 °C, W 7 °C)		kW / EER	10,00/2,81	12,20/2,56	7,00/3,17	10,00/2,85	12,20/2,56
Cooling capacity / EER (A 35 °C, W 18 °C)		kW / EER	10,00/4,17	12,20/4,12	7,00/4,61	10,00/4,17	12,20/4,12
Seasonal energy efficiency - Heating average climate (W35 °C / W55 °C)		ηs %	190/134	190/130	190/133	190/134	190/130
		SCOP	4,83/3,43	4,83/3,33	4,83/3,40	4,83/3,43	4,83/3,33
Energy class heating average climate (W35 °C / W55 °C) [1]		A+++ to D	A+++/A++	A+++/A++	A+++/A++	A+++/A++	A+++/A++
Seasonal energy efficiency - Heating warm climate (W35 °C / W55 °C)		ηs %	245/159	245/169	245/159	245/159	245/169
		SCOP	6,20/4,05	6,20/4,30	6,20/4,05	6,20/4,05	6,20/4,30
Energy class heating warm climate (W35 °C / W55 °C) [1]		A+++ to D	A+++/A+++	A+++/A+++	A+++/A+++	A+++/A+++	A+++/A+++
Seasonal energy efficiency - Heating cold climate (W35 °C / W55 °C)		ηs %	168/121	168/121	168/121	168/121	168/121
		SCOP	4,28/3,10	4,28/3,10	4,28/3,10	4,28/3,10	4,28/3,10
Energy class heating cold climate (W35 °C / W55 °C) [1]		A+++ to D	A++/A+	A++/A+	A++/A+	A++/A+	A++/A+
Indoor unit			**WH-ADC1216H6E5**	**WH-ADC1216H6E5**	**WH-ADC0916H9E8**	**WH-ADC0916H9E8**	**WH-ADC0916H9E8**
Sound pressure	Heat / Cool	dB(A)	33/33	33/33	33/33	33/33	33/33
Dimension / Net weight	H x W x D	mm / kg	1800x598x717/124	1800x598x717/124	1800x598x717/126	1800x598x717/126	1800x598x717/126
Water pipe connector		Inch	R 1¼	R 1¼	R 1¼	R 1¼	R 1¼
A class pump	Number of speeds		Variable Speed	Variable Speed	Variable Speed	Variable Speed	Variable Speed
	Input power (Min/Max)	W	36/152	36/152	36/152	36/152	36/152
Heating water flow (ΔT=5 K. 35 °C)		L/min	34,4	45,9	25,8	34,4	45,9
Capacity of integrated electric heater		kW	6	6	9	9	9
Recommended fuse		A	30/30	30/30	16/16	16/16	16/16
Recommended cable size, supply 1 / 2		mm²	3x4,0/3x4,0	3x4,0/3x4,0	5x1,5/5x1,5	5x1,5/5x1,5	5x1,5/5x1,5
Water volume		L	185	185	185	185	185
Maximum water temperature		°C	65	65	65	65	65
Material inside tank			Stainless steel	Stainless steel	Stainless steel	Stainless steel	Stainless steel
Tapping profile according EN16147			L	L	L	L	L
DHW tank ERP average climate efficiency rating [2]		A+ to F	A	A	A	A	A
DHW tank ERP warm climate efficiency rating [2]		A+ to F	A	A	A	A	A
DHW tank ERP cold climate efficiency rating [2]		A+ to F	A	B	A	A	B
DHW tank ERP average climate η / SCOP		ηwh % / SCOP	95/2,38	91/2,28	95/2,38	95/2,38	91/2,28
DHW tank ERP warm climate η / SCOP		ηwh % / SCOP	110/2,75	107/2,68	110/2,75	110/2,75	107/2,68
DHW tank ERP cold climate η / SCOP		ηwh % / SCOP	75/1,80	72/1,88	75/1,88	75/1,80	72/1,88
Outdoor unit			**WH-UD12HE5**	**WH-UD16HE5**	**WH-UD09HE8**	**WH-UD12HE8**	**WH-UD16HE8**
Sound power part load [3]	Heat	dB(A)	65	65	65	65	65
Sound power full load	Heat / Cool	dB(A)	69/68	72/72	68/67	69/68	72/72
Dimension / Net weight	H x W x D	mm / kg	1340x900x320/101	1340x900x320/101	1340x900x320/107	1340x900x320/107	1340x900x320/107
Refrigerant (R410A) / CO_2 Eq.		kg / T	2,55/5,324	2,55/5,324	2,55/5,324	2,55/5,324	2,55/5,324
Pipe diameter	Liquid / Gas	Inch (mm)	3/8(9,52)/5/8(15,88)	3/8(9,52)/5/8(15,88)	3/8(9,52)/5/8(15,88)	3/8(9,52)/5/8(15,88)	3/8(9,52)/5/8(15,88)
Pipe length range / Elevation difference (in/out)		m / m	3~50/30	3~50/30	3~30/20	3~30/20	3~30/20
Pipe length for additional gas / Additional gas amount		m / g/m	10/50	10/50	10/50	10/50	10/50
Operation range	Outdoor ambient	°C	-20~+35	-20~+35	-20~+35	-20~+35	-20~+35
Water outlet	Heat / Cool	°C	20~55/5~20	20~55/5~20	20~55/5~20	20~55/5~20	20~55/5~20

Accessories (optional)	
PAW-ADC-PREKIT-H	Piping pre installation kit for H Generation
PAW-ADC-CV150	Decorative magnetic side cover
CZ-TAW1	Aquarea Smart Cloud for remote control and maintenance through wireless or wired LAN

Accessories (optional)	
CZ-NS4P	Additional functions PCB
PAW-A2W-RTWIRED	Room thermostat
PAW-A2W-RTWIRELESS	Wireless LCD room thermostat

1) Scale from A+++ to D. 2) Scale from A+ to F. 3) Sound power in accordance to 8112013,81312013 and EN12102-1:2017 at +7 °C.
EER and COP calculation is based in accordance to EN14511.
This product is designed to comply with the European Water Quality Directive 98/83/EC amended by 2015/1787/EU. The lifespan of the product is not guaranteed in the case of the use of groundwater, such as spring water or well water, the use of tap water when salt or other impurities are contained, nor in areas of acidic water quality. Maintenance and warranty costs related to these cases are the customer's responsibility.

INTERNET CONTROL: Optional. GOOD DESIGN AWARD 2017: Indoor units All in One and Bi-bloc H Generation awarded with the prestigious Good Design Award 2017.

Aquarea T-CAP All in One H Generation Single Phase / Three Phase. Heating and Cooling

• R410A refrigerant

GOOD DESIGN

Technical focus

Works at temperatures as low as -28 °C — Constant capacity up to -20 °C — Reduced installation costs — Reduced installation time and minimised installation errors — Easy remote controller to set up — Electrical connections at the front — Easier installation and maintenance — Remote controller functions (cooling mode activation possible by software. This activation can only be done by service partner)

CZ-TAW1
Cloud connection. For user control and installer remote maintenance.

			Single Phase (Power to indoor)		Three Phase (Power to indoor)		
Kit			**KIT-AXC09HE5**	**KIT-AXC12HE5**	**KIT-AXC09HE8**	**KIT-AXC12HE8**	**KIT-AXC16HE8**
Heating capacity / COP (A +7 °C, W 35 °C)		kW / COP	9,00/4,84	12,00/4,74	9,00/4,84	12,00/4,74	16,00/4,28
Heating capacity / COP (A +7 °C, W 55 °C)		kW / COP	9,00/2,94	12,00/2,88	9,00/2,94	12,00/2,88	16,00/2,71
Heating capacity / COP (A +2 °C, W 35 °C)		kW / COP	9,00/3,59	12,00/3,44	9,00/3,59	12,00/3,44	16,00/3,10
Heating capacity / COP (A +2 °C, W 55 °C)		kW / COP	9,00/2,21	12,00/2,19	9,00/2,21	12,00/2,19	16,00/2,13
Heating capacity / COP (A -7 °C, W 35 °C)		kW / COP	9,00/2,85	12,00/2,72	9,00/2,85	12,00/2,72	16,00/2,49
Heating capacity / COP (A -7 °C, W 55 °C)		kW / COP	9,00/2,02	12,00/1,92	9,00/2,02	12,00/1,92	16,00/1,86
Cooling capacity / EER (A 35 °C, W 7 °C)		kW / EER	7,00/3,17	10,00/2,81	7,00/3,17	10,00/2,81	12,20/2,57
Cooling capacity / EER (A 35 °C, W 18 °C)		kW / EER	7,00/5,19	10,00/5,13	7,00/5,19	10,00/5,13	12,20/3,49
Seasonal energy efficiency - Heating average climate (W35 °C / W55 °C)		ηs %	181/130	170/130	181/130	170/130	160/125
		SCOP	4,60/3,33	4,33/3,33	4,60/3,33	4,33/3,33	4,08/3,20
Energy class heating average climate (W35 °C / W55 °C) [1]		A+++ to D	A+++/A++	A++/A++	A+++/A++	A++/A++	A++/A++
Seasonal energy efficiency - Heating warm climate (W35 °C / W55 °C)		ηs %	235/158	231/158	235/158	231/158	231/159
		SCOP	5,95/4,03	5,85/4,03	5,95/4,03	5,85/4,03	5,85/4,05
Energy class heating warm climate (W35 °C / W55 °C) [1]		A+++ to D	A+++/A+++	A+++/A+++	A+++/A+++	A+++/A+++	A+++/A+++
Seasonal energy efficiency - Heating cold climate (W35 °C / W55 °C)		ηs %	160/125	160/125	160/125	160/125	150/125
		SCOP	4,08/3,20	4,08/3,20	4,08/3,20	4,08/3,20	3,83/3,20
Energy class heating cold climate (W35 °C / W55 °C) [1]		A+++ to D	A++/A++	A++/A++	A++/A++	A++/A++	A++/A++
Indoor unit			**WH-ADC1216H6E5**	**WH-ADC1216H6E5**	**WH-ADC0916H9E8**	**WH-ADC0916H9E8**	**WH-ADC0916H9E8**
Sound pressure	Heat / Cool	dB(A)	33/33	33/33	33/33	33/33	33/33
Dimension / Net weight	H x W x D	mm / kg	1800x598x717/124	1800x598x717/124	1800x598x717/126	1800x598x717/126	1800x598x717/126
Water pipe connector		Inch	R 1¼	R 1¼	R 1¼	R 1¼	R 1¼
A class pump	Number of speeds		Variable Speed	Variable Speed	Variable Speed	Variable Speed	Variable Speed
	Input power (Min/Max)	W	36/152	36/152	36/152	36/152	36/152
Heating water flow (ΔT=5 K. 35 °C)		L/min	25,8	34,4	25,8	34,4	45,9
Capacity of integrated electric heater		kW	6	6	9	9	9
Recommended fuse		A	30/30	30/30	16/16	16/16	16/16
Recommended cable size, supply 1 / 2		mm²	3x4,0/3x4,0	3x4,0/3x4,0	5x1,5/5x1,5	5x1,5/5x1,5	5x1,5/5x1,5
Water volume		L	185	185	185	185	185
Maximum water temperature		°C	65	65	65	65	65
Material inside tank			Stainless steel	Stainless steel	Stainless steel	Stainless steel	Stainless steel
Tapping profile according EN16147			L	L	L	L	L
DHW tank ERP average climate efficiency rating [2]		A+ to F	A	A	A	A	A
DHW tank ERP warm climate efficiency rating [2]		A+ to F	A	A	A	A	A
DHW tank ERP cold climate efficiency rating [2]		A+ to F	A	A	A	A	B
DHW tank ERP average climate ηwh / SCOP		ηwh % / SCOP	95/2,38	95/2,38	95/2,38	95/2,38	91/2,28
DHW tank ERP warm climate ηwh / SCOP		ηwh % / SCOP	110/2,75	110/2,75	110/2,75	110/2,75	107/2,68
DHW tank ERP cold climate ηwh / SCOP		ηwh % / SCOP	75/1,88	75/1,88	75/1,88	75/1,80	72/1,88
Outdoor unit			**WH-UX09HE5**	**WH-UX12HE5**	**WH-UX09HE8**	**WH-UX12HE8**	**WH-UX16HE8**
Sound power part load [3]	Heat	dB(A)	66	66	65	65	67
Sound power full load	Heat / Cool	dB(A)	68/67	69/68	68/67	69/68	72/71
Dimension / Net weight	H x W x D	mm / kg	1340x900x320/101	1340x900x320/101	1340x900x320/108	1340x900x320/108	1340x900x320/118
Refrigerant (R410A) / CO_2 Eq.		kg / T	2,85/5,951	2,85/5,951	2,85/5,951	2,85/5,951	2,90/6,055
Pipe diameter	Liquid / Gas	Inch (mm)	3/8(9,52)/5/8(15,88)	3/8(9,52)/5/8(15,88)	3/8(9,52)/5/8(15,88)	3/8(9,52)/5/8(15,88)	3/8(9,52)/5/8(15,88)
Pipe length range / Elevation difference (in/out)		m / m	3~30/20	3~30/20	3~30/20	3~30/20	3~30/20
Pipe length for additional gas / Additional gas amount		m / g/m	10/50	10/50	10/50	10/50	10/50
Operation range	Outdoor ambient	°C	-28~+35	-28~+35	-28~+35	-28~+35	-28~+35
Water outlet	Heat / Cool	°C	20~60/5~20	20~60/5~20	20~60/5~20	20~60/5~20	20~60/5~20

Accessories (optional)	
PAW-ADC-PREKIT-H	Piping pre installation kit for H Generation
PAW-ADC-CV150	Decorative magnetic side cover
CZ-TAW1	Aquarea Smart Cloud for remote control and maintenance through wireless or wired LAN

Accessories (optional)	
CZ-NS4P	Additional functions PCB
PAW-A2W-RTWIRED	Room thermostat
PAW-A2W-RTWIRELESS	Wireless LCD room thermostat

1) Scale from A+++ to D. 2) Scale from A+ to F. 3) Sound power in accordance to 8112013,81312013 and EN12102-1:2017 at +7 °C.
EER and COP calculation is based in accordance to EN14511.
This product is designed to comply with the European Water Quality Directive 98/83/EC amended by 2015/1787/EU. The lifespan of the product is not guaranteed in the case of the use of groundwater, such as spring water or well water, the use of tap water when salt or other impurities are contained, nor in areas of acidic water quality. Maintenance and warranty costs related to these cases are the customer's responsibility.

INTERNET CONTROL: Optional. GOOD DESIGN AWARD 2017: Indoor units All in One and Bi-bloc H Generation awarded with the prestigious Good Design Award 2017.

Aquarea T-CAP All in One H Generation Three Phase. Super Quiet outdoor unit. Heating and Cooling • R410A refrigerant

GOOD DESIGN

Technical focus

Works at temperatures as low as -28 °C — Constant capacity up to -20 °C — Reduced installation costs — Reduced installation time and minimised installation errors — Easy remote controller to set up — Electrical connections at the front — Easier installation and maintenance — Remote controller functions (cooling mode activation possible by software. This activation can only be done by service partner)

A++ ErP 55 °C Scale from A+++ to D
A+++ ErP 35 °C Scale from A+++ to D
A DHW Scale from A+ to F

CZ-TAW1
Cloud connection. For user control and installer remote maintenance.

			Three Phase (Power to indoor)		
Kit			**KIT-AQC09HE8**	**KIT-AQC12HE8**	**KIT-AQC16HE8**
Heating capacity / COP (A +7 °C, W 35 °C)		kW / COP	9,00/4,84	12,00/4,74	16,00/4,28
Heating capacity / COP (A +7 °C, W 55 °C)		kW / COP	9,00/2,94	12,00/2,88	16,00/2,71
Heating capacity / COP (A +2 °C, W 35 °C)		kW / COP	9,00/3,59	12,00/3,44	16,00/3,10
Heating capacity / COP (A +2 °C, W 55 °C)		kW / COP	9,00/2,21	12,00/2,19	16,00/2,13
Heating capacity / COP (A -7 °C, W 35 °C)		kW / COP	9,00/2,85	12,00/2,72	16,00/2,49
Heating capacity / COP (A -7 °C, W 55 °C)		kW / COP	9,00/2,02	12,00/1,92	16,00/1,86
Cooling capacity / EER (A 35 °C, W 7 °C)		kW / EER	7,00/3,17	10,00/2,81	12,20/2,57
Cooling capacity / EER (A 35 °C, W 18 °C)		kW / EER	7,00/5,19	10,00/5,13	12,20/3,49
Seasonal energy efficiency - Heating average climate (W35 °C / W55 °C)		ηs %	181/130	170/130	160/125
		SCOP	4,60/3,33	4,33/3,33	4,08/3,20
Energy class heating average climate (W35 °C / W55 °C) [1]		A+++ to D	A+++/A++	A++/A++	A++/A++
Seasonal energy efficiency - Heating warm climate (W35 °C / W55 °C)		ηs %	235/158	231/158	231/159
		SCOP	5,95/4,03	5,85/4,03	5,85/4,05
Energy class heating warm climate (W35 °C / W55 °C) [1]		A+++ to D	A+++/A+++	A+++/A+++	A+++/A+++
Seasonal energy efficiency - Heating cold climate (W35 °C / W55 °C)		ηs %	160/125	160/125	150/125
		SCOP	4,08/3,20	4,08/3,20	3,83/3,20
Energy class heating cold climate (W35 °C / W55 °C) [1]		A+++ to D	A++/A++	A++/A++	A++/A++
Indoor unit			**WH-ADC0916H9E8**	**WH-ADC0916H9E8**	**WH-ADC0916H9E8**
Sound pressure	Heat / Cool	dB(A)	33/33	33/33	33/33
Dimension / Net weight	H x W x D	mm / kg	1800 x 598 x 717/126	1800 x 598 x 717/126	1800 x 598 x 717/126
Water pipe connector		Inch	R 1¼	R 1¼	R 1¼
A class pump	Number of speeds		Variable Speed	Variable Speed	Variable Speed
	Input power (Min/Max)	W	36/152	36/152	36/152
Heating water flow (ΔT=5 K. 35 °C)		L/min	25,8	34,4	45,9
Capacity of integrated electric heater		kW	9	9	9
Recommended fuse		A	16/16	16/16	16/16
Recommended cable size, supply 1 / 2		mm²	5 x 1,5/5 x 1,5	5 x 1,5/5 x 1,5	5 x 1,5/5 x 1,5
Water volume		L	185	185	185
Maximum water temperature		°C	65	65	65
Material inside tank			Stainless steel	Stainless steel	Stainless steel
Tapping profile according EN16147			L	L	L
DHW tank ERP average climate efficiency rating [2]		A+ to F	A	A	A
DHW tank ERP warm climate efficiency rating [2]		A+ to F	A	A	A
DHW tank ERP cold climate efficiency rating [2]		A+ to F	A	A	B
DHW tank ERP average climate η / SCOP		ηwh % / SCOP	95/2,38	95/2,38	91/2,28
DHW tank ERP warm climate η / SCOP		ηwh % / SCOP	110/2,75	110/2,75	107/2,68
DHW tank ERP cold climate η / SCOP		ηwh % / SCOP	75/1,88	75/1,80	72/2,35
Outdoor unit			**WH-UQ09HE8**	**WH-UQ12HE8**	**WH-UQ16HE8**
Sound power part load [3]	Heat	dB(A)	58	58	62
Sound power full load	Heat / Cool	dB(A)	61/63	62/64	65/68
Dimension / Net weight	H x W x D	mm / kg	1410 x 1283 x 320/151	1410 x 1283 x 320/151	1410 x 1283 x 320/161
Refrigerant (R410A) / CO_2 Eq.		kg / T	2,85/5,951	2,85/5,951	2,99/6,243
Pipe diameter	Liquid / Gas	Inch (mm)	3/8 (9,52)/5/8 (15,88)	3/8 (9,52)/5/8 (15,88)	3/8 (9,52)/5/8 (15,88)
Pipe length range / Elevation difference (in/out)		m / m	3 ~ 30/20	3 ~ 30/20	3 ~ 30/20
Pipe length for additional gas / Additional gas amount		m / g/m	10/50	10/50	10/50
Operation range	Outdoor ambient	°C	-28 ~ +35	-28 ~ +35	-28 ~ +35
Water outlet	Heat / Cool	°C	20 - 60/5 - 20	20 - 60/5 - 20	20 - 60/5 - 20

Accessories (optional)	
PAW-ADC-PREKIT-H	Piping pre installation kit for H Generation
PAW-ADC-CV150	Decorative magnetic side cover
CZ-TAW1	Aquarea Smart Cloud for remote control and maintenance through wireless or wired LAN

Accessories (optional)	
CZ-NS4P	Additional functions PCB
PAW-A2W-RTWIRED	Room thermostat
PAW-A2W-RTWIRELESS	Wireless LCD room thermostat

1) Scale from A+++ to D. 2) Scale from A+ to F. 3) Sound power in accordance to 8112013,81312013 and EN12102-1:2017 at +7 °C.
EER and COP calculation is based in accordance to EN14511.
This product is designed to comply with the European Water Quality Directive 98/83/EC amended by 2015/1787/EU. The lifespan of the product is not guaranteed in the case of the use of groundwater, such as spring water or well water, the use of tap water when salt or other impurities are contained, nor in areas of acidic water quality. Maintenance and warranty costs related to these cases are the customer's responsibility.

ErP 55°C · ErP 35°C · DHW · INVERTER+ · A CLASS WATER PUMP AUTO SPEED · -20°C CONSTANT HEATING T-CAP · 60°C OUTPUT WATER FLOW TEMPERATURE · DHW · -28°C HEATING MODE · WATER FILTER · FLOW SENSOR · BOILER CONNECTION · ADVANCED CONTROL · OPTIONAL WLAN · BMS CONNECTIVITY · 5 YEARS COMPRESSOR WARRANTY

INTERNET CONTROL: Optional. GOOD DESIGN AWARD 2017: Indoor units All in One and Bi-bloc H Generation awarded with the prestigious Good Design Award 2017.

Aquarea High Performance Bi-bloc H Generation Single Phase. Heating and Cooling - SDC • R410A refrigerant

Technical focus

Very high energy savings A+++ (*) — Simple installation & maintenance — Special software for low consumption homes with minimum output temperature: 20 °C — Works at temperatures as low as -20 °C — Automatic Air purge valve — Display of the compressor frequency

GOOD DESIGN

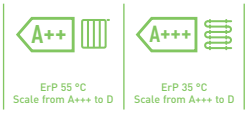

CZ-TAW1
Cloud connection. For user control and installer remote maintenance.

			Single Phase Heating and Cooling			
Kit			**KIT-WC03H3E5**	**KIT-WC05H3E5**	**KIT-WC07H3E5**	**KIT-WC09H3E5**
Heating capacity / COP (A +7 °C, W 35 °C)		kW / COP	3,20 / 5,00	5,00 / 4,63	7,00 / 4,46	9,00 / 4,13
Heating capacity / COP (A +7 °C, W 55 °C)		kW / COP	3,20 / 2,67	5,00 / 2,65	6,80 / 2,63	8,90 / 2,41
Heating capacity / COP (A +2 °C, W 35 °C)		kW / COP	3,20 / 3,56	4,20 / 3,11	6,55 / 3,34	6,70 / 3,13
Heating capacity / COP (A +2 °C, W 55 °C)		kW / COP	3,20 / 2,15	4,10 / 1,98	6,00 / 1,99	6,00 / 1,99
Heating capacity / COP (A -7 °C, W 35 °C)		kW / COP	3,20 / 2,69	4,20 / 2,59	5,15 / 2,68	5,90 / 2,52
Heating capacity / COP (A -7 °C, W 55 °C)		kW / COP	3,20 / 1,72	3,55 / 1,71	4,80 / 1,89	5,80 / 1,88
Cooling capacity / EER (A 35 °C, W 7 °C)		kW / EER	3,20 / 3,08	4,50 / 2,69	6,00 / 2,63	7,00 / 2,43
Cooling capacity / EER (A 35 °C, W 18 °C)		kW / EER	3,30 / 3,75	5,00 / 3,76	6,00 / 3,57	7,00 / 3,26
Seasonal energy efficiency - Heating average climate (W35 °C / W55 °C)		ηs %	195 / 130	195 / 130	190 / 130	190 / 130
		SCOP	4,95 / 3,33	4,95 / 3,33	4,83 / 3,33	4,83 / 3,33
Energy class heating average climate (W35 °C / W55 °C)		A+++ to D	A+++ / A++	A+++ / A++	A+++ / A++	A+++ / A++
Seasonal energy efficiency - Heating warm climate (W35 °C / W55 °C)		ηs %	244 / 163	244 / 163	225 / 160	225 / 160
		SCOP	6,18 / 4,15	6,18 / 4,15	5,70 / 4,08	5,70 / 4,08
Energy class heating warm climate (W35 °C / W55 °C)		A+++ to D	A+++ / A+++	A+++ / A+++	A+++ / A+++	A+++ / A+++
Seasonal energy efficiency - Heating cold climate (W35 °C / W55 °C)		ηs %	150 / 103	150 / 103	160 / 115	160 / 115
		SCOP	3,83 / 2,65	3,83 / 2,65	4,08 / 2,95	4,08 / 2,95
Energy class heating cold climate (W35 °C / W55 °C)		A+++ to D	A++ / A+	A++ / A+	A++ / A+	A++ / A+
Indoor unit			**WH-SDC03H3E5-1**	**WH-SDC05H3E5-1**	**WH-SDC07H3E5-1**	**WH-SDC09H3E5-1**
Sound pressure	Heat / Cool	dB(A)	28 / 28	28 / 28	30 / 30	30 / 30
Dimension	H x W x D	mm	892 x 500 x 340	892 x 500 x 340	892 x 500 x 340	892 x 500 x 340
Net weight		kg	44	44	44	44
Water pipe connector		Inch	R 1¼	R 1¼	R 1¼	R 1¼
A class pump	Number of speeds		Variable Speed	Variable Speed	Variable Speed	Variable Speed
	Input power (Min / Max)	W	30 / 100	33 / 106	34 / 114	40 / 120
Heating water flow (ΔT=5 K. 35 °C)		L/min	9,2	14,3	20,1	25,8
Capacity of integrated electric heater		kW	3	3	3	3
Recommended fuse		A	15 / 30	15 / 30	15 / 30	15 / 30
Recommended cable size, supply 1 / 2		mm	3 x 1,5 / 3 x 1,5	3 x 1,5 / 3 x 1,5	3 x 1,5 / 3 x 1,5	3 x 1,5 / 3 x 1,5
Outdoor unit			**WH-UD03HE5-1**	**WH-UD05HE5-1**	**WH-UD07HE5-1**	**WH-UD09HE5-1**
Sound power part load [1]	Heat	dB(A)	55	55	59	59
Sound power full load	Heat / Cool	dB(A)	64 / 65	65 / 66	68 / 66	69 / 68
Dimension	H x W x D	mm	622 x 824 x 298	622 x 824 x 298	795 x 900 x 320	795 x 900 x 320
Net weight		kg	39	39	66	66
Refrigerant (R410A) / CO_2 Eq.		kg / T	1,20 / 2,506	1,20 / 2,506	1,45 / 3,028	1,45 / 3,028
Pipe diameter	Liquid / Gas	Inch (mm)	1/4 (6,35) / 1/2 (12,70)	1/4 (6,35) / 1/2 (12,70)	1/4 (6,35) / 5/8 (15,88)	1/4 (6,35) / 5/8 (15,88)
Pipe length range		m	3 ~ 15	3 ~ 15	3 ~ 40	3 ~ 40
Elevation difference (in/out)		m	5	5	30	30
Pipe length for additional gas		m	10	10	10	10
Additional gas amount		g/m	20	20	30	30
Operation range	Outdoor ambient	°C	-20 ~ +35	-20 ~ +35	-20 ~ +35	-20 ~ +35
Water outlet	Heat / Cool	°C	20 ~ 55 / 5 ~ 20	20 ~ 55 / 5 ~ 20	20 ~ 55 / 5 ~ 20	20 ~ 55 / 5 ~ 20

Accessories (optional)	
PAW-TD20C1E5	Tank 200L - Stainless steel
PAW-TD30C1E5	Tank 300L - Stainless steel
PAW-TA20C1E5STD	Tank 200L - Enamelled
PAW-TA30C1E5STD	Tank 300L - Enamelled
PAW-3WYVLV-HW	3 way valve for DHW Tanks
CZ-NV1	3 way valve kit for inside of hydrokit

Accessories (optional)	
PAW-BTANK50L-2	Buffer tank 50L
CZ-TAW1	Aquarea Smart Cloud for remote control and maintenance through wireless or wired LAN
CZ-NS4P	Additional functions PCB
PAW-A2W-RTWIRED	Room thermostat
PAW-A2W-RTWIRELESS	Wireless LCD room thermostat

1) Sound power in accordance to 8112013,81312013 and EN12102-1:2017 at +7 °C.
EER and COP calculation is based in accordance to EN14511.

INTERNET CONTROL: Optional. GOOD DESIGN AWARD 2017: Indoor units All in One and Bi-bloc H Generation awarded with the prestigious Good Design Award 2017.

Aquarea High Performance Bi-bloc H Generation Single Phase / Three Phase. Heating and Cooling - SDC

• R410A refrigerant

GOOD DESIGN

Technical focus

Very high energy savings A+++ (*) — Simple installation & maintenance — Special software for low consumption homes with minimum output temperature: 20 °C — Works at temperatures as low as -20 °C — Automatic Air purge valve — Display of the compressor frequency

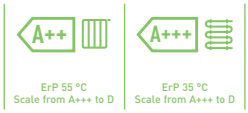

CZ-TAW1
Cloud connection. For user control and installer remote maintenance.

			Single Phase Heating and Cooling		Three Phase (Power to indoor)		
Kit			**KIT-WC12H6E5**	**KIT-WC16H6E5**	**KIT-WC09H3E8**	**KIT-WC12H9E8**	**KIT-WC16H9E8**
Heating capacity / COP (A +7 °C, W 35 °C)		kW / COP	12,00/4,74	16,00/4,28	9,00/4,84	12,00/4,74	16,00/4,28
Heating capacity / COP (A +7 °C, W 55 °C)		kW / COP	12,00/2,88	14,50/2,68	9,00/2,94	12,00/2,88	14,50/2,68
Heating capacity / COP (A +2 °C, W 35 °C)		kW / COP	11,40/3,44	13,00/3,28	9,00/3,59	11,40/3,44	13,00/3,28
Heating capacity / COP (A +2 °C, W 55 °C)		kW / COP	9,10/2,20	9,80/2,17	8,80/2,23	9,10/2,20	9,80/2,17
Heating capacity / COP (A -7 °C, W 35 °C)		kW / COP	10,00/2,73	11,40/2,57	9,00/2,85	10,00/2,73	11,40/2,57
Heating capacity / COP (A -7 °C, W 55 °C)		kW / COP	8,20/1,92	9,00/1,82	7,90/2,05	8,20/1,92	9,00/1,82
Cooling capacity / EER (A 35 °C, W 7 °C)		kW / EER	10,00/2,81	12,20/2,56	7,00/3,17	10,00/2,81	12,20/2,56
Cooling capacity / EER (A 35 °C, W 18 °C)		kW / EER	10,00/4,17	12,20/4,12	7,00/4,61	10,00/4,17	12,20/4,12
Seasonal energy efficiency - Heating average climate (W35 °C / W55 °C)		ηs %	190/134	190/130	190/133	190/134	190/130
		SCOP	4,83/3,43	4,83/3,33	4,83/3,40	4,83/3,43	4,83/3,33
Energy class heating average climate (W35 °C / W55 °C)		A+++ to D	A+++/A++	A+++/A++	A+++/A++	A+++/A++	A+++/A++
Seasonal energy efficiency - Heating warm climate (W35 °C / W55 °C)		ηs %	245/159	245/169	245/159	245/159	245/169
		SCOP	6,20/4,05	6,20/4,30	6,20/4,05	6,20/4,05	6,20/4,30
Energy class heating warm climate (W35 °C / W55 °C)		A+++ to D	A+++/A+++	A+++/A+++	A+++/A+++	A+++/A+++	A+++/A+++
Seasonal energy efficiency - Heating cold climate (W35 °C / W55 °C)		ηs %	168/121	168/121	168/121	168/121	168/121
		SCOP	4,28/3,10	4,28/3,10	4,28/3,10	4,28/3,10	4,28/3,10
Energy class heating cold climate (W35 °C / W55 °C)		A+++ to D	A++/A+	A++/A+	A++/A+	A++/A+	A++/A+
Indoor unit			**WH-SDC12H6E5**	**WH-SDC16H6E5**	**WH-SDC09H3E8**	**WH-SDC12H9E8**	**WH-SDC16H9E8**
Sound pressure	Heat / Cool	dB(A)	33/33	33/33	33/33	33/33	33/33
Dimension	H x W x D	mm	892 x 500 x 340	892 x 500 x 340	892 x 500 x 340	892 x 500 x 340	892 x 500 x 340
Net weight		kg	44	45	44	45	45
Water pipe connector		Inch	R 1¼	R 1¼	R 1¼	R 1¼	R 1¼
A class pump	Number of speeds		Variable Speed	Variable Speed	Variable Speed	Variable Speed	Variable Speed
	Input power (Min/Max)	W	34/110	30/105	32/102	34/110	30/105
Heating water flow (ΔT=5 K. 35 °C)		L/min	34,4	45,9	25,8	34,4	45,9
Capacity of integrated electric heater		kW	6	6	3	9	9
Recommended fuse		A	30/30	30/30	15/30	15/30	15/30
Recommended cable size, supply 1 / 2		mm	3 x 4,0 or 6,0/3 x 4,0	3 x 4,0 or 6,0/3 x 4,0	5 x 1,5/5 x 1,5	5 x 1,5/5 x 1,5	5 x 1,5/5 x 1,5
Outdoor unit			**WH-UD12HE5**	**WH-UD16HE5**	**WH-UD09HE8**	**WH-UD12HE8**	**WH-UD16HE8**
Sound power part load [1]	Heat	dB(A)	65	65	65	65	65
Sound power full load	Heat / Cool	dB(A)	69/68	72/72	68/67	69/68	72/72
Dimension	H x W x D	mm	1340 x 900 x 320	1340 x 900 x 320	1340 x 900 x 320	1340 x 900 x 320	1340 x 900 x 320
Net weight		kg	101	101	107	107	107
Refrigerant (R410A) / CO_2 Eq.		kg / T	2,55/5,324	2,55/5,324	2,55/5,324	2,55/5,324	2,55/5,324
Pipe diameter	Liquid / Gas	Inch (mm)	3/8(9,52)/5/8(15,88)	3/8(9,52)/5/8(15,88)	3/8(9,52)/5/8(15,88)	3/8(9,52)/5/8(15,88)	3/8(9,52)/5/8(15,88)
Pipe length range		m	3 ~ 50	3 ~ 50	3 ~ 30	3 ~ 30	3 ~ 30
Elevation difference (in/out)		m	30	30	20	20	20
Pipe length for additional gas		m	10	10	10	10	10
Additional gas amount		g/m	50	50	50	50	50
Operation range	Outdoor ambient	°C	-20 ~ +35	-20 ~ +35	-20 ~ +35	-20 ~ +35	-20 ~ +35
Water outlet	Heat / Cool	°C	20 ~ 55/5 ~ 20	20 ~ 55/5 ~ 20	20 ~ 55/5 ~ 20	20 ~ 55/5 ~ 20	20 ~ 55/5 ~ 20

Accessories (optional)	
PAW-TD20C1E5	Tank 200L - Stainless steel
PAW-TD30C1E5	Tank 300L - Stainless steel
PAW-TA20C1E5STD	Tank 200L - Enamelled
PAW-TA30C1E5STD	Tank 300L - Enamelled
PAW-3WYVLV-HW	3 way valve for DHW Tanks
CZ-NV1	3 way valve kit for inside of hydrokit

Accessories (optional)	
PAW-BTANK50L-2	Buffer tank 50L
CZ-TAW1	Aquarea Smart Cloud for remote control and maintenance through wireless or wired LAN
CZ-NS4P	Additional functions PCB
PAW-A2W-RTWIRED	Room thermostat
PAW-A2W-RTWIRELESS	Wireless LCD room thermostat

1) Sound power in accordance to 8112013,81312013 and EN12102-1:2017 at +7 °C.
EER and COP calculation is based in accordance to EN14511.

INTERNET CONTROL: Optional. GOOD DESIGN AWARD 2017: Indoor units All in One and Bi-bloc H Generation awarded with the prestigious Good Design Award 2017.

Aquarea T-CAP Bi-bloc H Generation Single Phase / Three Phase. Heating and Cooling - SXC • R410A refrigerant

GOOD DESIGN

Technical focus

Very high energy savings A++ — Simple installation & maintenance — Constant capacity up to -20 °C — Water temperature up to 60 °C — Special software for low consumption homes with minimum output temperature: 20 °C — Works at temperatures as low as -28 °C — Automatic Air purge valve — Display of the compressor frequency

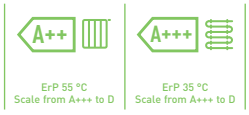

CZ-TAW1
Cloud connection. For user control and installer remote maintenance.

			Single Phase (Power to indoor)		Three Phase (Power to indoor)		
Kit			**KIT-WXC09H3E5**	**KIT-WXC12H6E5**	**KIT-WXC09H3E8**	**KIT-WXC12H9E8**	**KIT-WXC16H9E8**
Heating capacity / COP (A +7 °C, W 35 °C)		kW / COP	9,00/4,84	12,00/4,74	9,00/4,84	12,00/4,74	16,00/4,28
Heating capacity / COP (A +7 °C, W 55 °C)		kW / COP	9,00/2,94	12,00/2,88	9,00/2,94	12,00/2,88	16,00/2,71
Heating capacity / COP (A +2 °C, W 35 °C)		kW / COP	9,00/3,59	12,00/3,44	9,00/3,59	12,00/3,44	16,00/3,10
Heating capacity / COP (A +2 °C, W 55 °C)		kW / COP	9,00/2,21	12,00/2,19	9,00/2,21	12,00/2,19	16,00/2,13
Heating capacity / COP (A -7 °C, W 35 °C)		kW / COP	9,00/2,85	12,00/2,72	9,00/2,85	12,00/2,72	16,00/2,49
Heating capacity / COP (A -7 °C, W 55 °C)		kW / COP	9,00/2,02	12,00/1,92	9,00/2,02	12,00/1,92	16,00/1,86
Cooling capacity / EER (A 35 °C, W 7 °C)		kW / EER	7,00/3,17	10,00/2,81	7,00/3,17	10,00/2,81	12,20/2,57
Cooling capacity / EER (A 35 °C, W 18 °C)		kW / EER	7,00/5,19	10,00/5,13	7,00/5,19	10,00/5,13	12,20/3,49
Seasonal energy efficiency - Heating average climate (W35 °C / W55 °C)		ηs %	181/130	170/130	181/130	170/130	160/125
		SCOP	4,60/3,33	4,33/3,33	4,60/3,33	4,33/3,33	4,08/3,20
Energy class heating average climate (W35 °C / W55 °C)		A+++ to D	A+++/A++	A++/A++	A+++/A++	A++/A++	A++/A++
Seasonal energy efficiency - Heating warm climate (W35 °C / W55 °C)		ηs %	235/158	231/158	235/158	231/158	231/159
		SCOP	5,95/4,03	5,85/4,03	5,95/4,03	5,85/4,03	5,85/4,05
Energy class heating warm climate (W35 °C / W55 °C)		A+++ to D	A+++/A+++	A+++/A+++	A+++/A+++	A+++/A+++	A+++/A+++
Seasonal energy efficiency - Heating cold climate (W35 °C / W55 °C)		ηs %	160/125	160/125	160/125	160/125	150/125
		SCOP	4,08/3,20	4,08/3,20	4,08/3,20	4,08/3,20	3,83/3,20
Energy class heating cold climate (W35 °C / W55 °C)		A+++ to D	A++/A++	A++/A++	A++/A++	A++/A++	A++/A++
Indoor unit			**WH-SXC09H3E5**	**WH-SXC12H6E5**	**WH-SXC09H3E8**	**WH-SXC12H9E8**	**WH-SXC16H9E8**
Sound pressure	Heat / Cool	dB(A)	33/33	33/33	33/33	33/33	33/33
Dimension	H x W x D	mm	892 x 500 x 340	892 x 500 x 340	892 x 500 x 340	892 x 500 x 340	892 x 500 x 340
Net weight		kg	43	43	43	44	45
Water pipe connector		Inch	R 1¼	R 1¼	R 1¼	R 1¼	R 1¼
A class pump	Number of speeds		Variable Speed	Variable Speed	Variable Speed	Variable Speed	Variable Speed
	Input power (Min/Max)	W	32/102	34/110	32/102	34/110	30/105
Heating water flow (ΔT=5 K. 35 °C)		L/min	25,8	34,4	25,8	34,4	45,9
Capacity of integrated electric heater		kW	3	6	3	9	9
Recommended fuse		A	30/30	30/30	16/16	16/16	16/16
Recommended cable size, supply 1 / 2		mm	3 x 4,0 or 6,0/3 x 4,0	3 x 4,0 or 6,0/3 x 4,0	5 x 1,5/3 x 1,5	5 x 1,5/5 x 1,5	5 x 1,5/5 x 1,5
Outdoor unit			**WH-UX09HE5**	**WH-UX12HE5**	**WH-UX09HE8**	**WH-UX12HE8**	**WH-UX16HE8**
Sound power part load [1]	Heat	dB(A)	66	66	65	65	67
Sound power full load	Heat / Cool	dB(A)	68/67	69/68	68/67	69/68	72/71
Dimension	H x W x D	mm	1340 x 900 x 320	1340 x 900 x 320	1340 x 900 x 320	1340 x 900 x 320	1340 x 900 x 320
Net weight		kg	101	101	108	108	118
Refrigerant (R410A) / CO_2 Eq.		kg / T	2,85/5,951	2,85/5,951	2,85/5,951	2,85/5,951	2,90/6,055
Pipe diameter	Liquid / Gas	Inch (mm)	3/8(9,52)/5/8(15,88)	3/8(9,52)/5/8(15,88)	3/8(9,52)/5/8(15,88)	3/8(9,52)/5/8(15,88)	3/8(9,52)/5/8(15,88)
Pipe length range		m	3 ~ 30	3 ~ 30	3 ~ 30	3 ~ 30	3 ~ 30
Elevation difference (in/out)		m	30	30	30	30	30
Pipe length for additional gas		m	10	10	10	10	10
Additional gas amount		g/m	50	50	50	50	50
Operation range	Outdoor ambient	°C	-28 ~ +35	-28 ~ +35	-28 ~ +35	-28 ~ +35	-28 ~ +35
Water outlet	Heat / Cool	°C	20 - 60/5 - 20	20 - 60/5 - 20	20 - 60/5 - 20	20 - 60/5 - 20	20 - 60/5 - 20

Accessories (optional)	
PAW-TD20C1E5	Tank 200L - Stainless steel
PAW-TD30C1E5	Tank 300L - Stainless steel
PAW-TA20C1E5STD	Tank 200L - Enamelled
PAW-TA30C1E5STD	Tank 300L - Enamelled
PAW-3WYVLV-HW	3 way valve for DHW Tanks
CZ-NV1	3 way valve kit for inside of hydrokit

Accessories (optional)	
PAW-BTANK50L-2	Buffer tank 50L
CZ-TAW1	Aquarea Smart Cloud for remote control and maintenance through wireless or wired LAN
CZ-NS4P	Additional functions PCB
PAW-A2W-RTWIRED	Room thermostat
PAW-A2W-RTWIRELESS	Wireless LCD room thermostat

1) Sound power in accordance to 8112013,81312013 and EN12102-1:2017 at +7 °C.
EER and COP calculation is based in accordance to EN14511.

INTERNET CONTROL: Optional. GOOD DESIGN AWARD 2017: Indoor units All in One and Bi-bloc H Generation awarded with the prestigious Good Design Award 2017.

Aquarea T-CAP Bi-bloc H Generation Three Phase. Super Quiet outdoor unit. Heating and Cooling - SQC

• R410A Gas

GOOD DESIGN

Technical focus

Very high energy savings A++ — Noise reduction of 7 dB is based on power level when heating mode — With Quite mode we can reach 10 ~ 12 dB(A) — Constant capacity up to -20 °C — Water temperature up to 60 °C — Special software for low consumption homes with minimum output temperature: 20 °C — Works at temperatures as low as -28 °C — Display of the compressor frequency

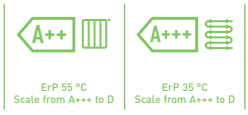

CZ-TAW1
Cloud connection. For user control and installer remote maintenance.

			Three Phase (Power to indoor)		
Kit			**KIT-WQC09H3E8**	**KIT-WQC12H9E8**	**KIT-WQC16H9E8**
Heating capacity / COP (A +7 °C, W 35 °C)		kW / COP	9,00 / 4,84	12,00 / 4,74	16,00 / 4,28
Heating capacity / COP (A +7 °C, W 55 °C)		kW / COP	9,00 / 2,94	12,00 / 2,88	16,00 / 2,71
Heating capacity / COP (A +2 °C, W 35 °C)		kW / COP	9,00 / 3,59	12,00 / 3,44	16,00 / 3,10
Heating capacity / COP (A +2 °C, W 55 °C)		kW / COP	9,00 / 2,21	12,00 / 2,19	16,00 / 2,13
Heating capacity / COP (A -7 °C, W 35 °C)		kW / COP	9,00 / 2,85	12,00 / 2,72	16,00 / 2,49
Heating capacity / COP (A -7 °C, W 55 °C)		kW / COP	9,00 / 2,02	12,00 / 1,92	16,00 / 1,86
Cooling capacity / EER (A 35 °C, W 7 °C)		kW / EER	7,00 / 3,17	10,00 / 2,81	12,20 / 2,57
Cooling capacity / EER (A 35 °C, W 18 °C)		kW / EER	7,00 / 5,19	10,00 / 5,13	12,20 / 3,49
Seasonal energy efficiency - Heating average climate (W35 °C / W55 °C)		ηs %	181 / 130	170 / 130	160 / 125
		SCOP	4,60 / 3,33	4,33 / 3,33	4,08 / 3,20
Energy class heating average climate (W35 °C / W55 °C)		A+++ to D	A+++ / A++	A++ / A++	A++ / A++
Seasonal energy efficiency - Heating warm climate (W35 °C / W55 °C)		ηs %	235 / 158	231 / 158	231 / 159
		SCOP	5,95 / 4,03	5,85 / 4,03	5,85 / 4,05
Energy class heating warm climate (W35 °C / W55 °C)		A+++ to D	A+++ / A+++	A+++ / A+++	A+++ / A+++
Seasonal energy efficiency - Heating cold climate (W35 °C / W55 °C)		ηs %	160 / 125	160 / 125	150 / 125
		SCOP	4,08 / 3,20	4,08 / 3,20	3,83 / 3,20
Energy class heating cold climate (W35 °C / W55 °C)		A+++ to D	A++ / A++	A++ / A++	A++ / A++
Indoor unit			**WH-SQC09H3E8**	**WH-SQC12H9E8**	**WH-SQC16H9E8**
Sound pressure	Heat / Cool	dB(A)	33 / 33	33 / 33	33 / 33
Dimension	H x W x D	mm	892 x 500 x 340	892 x 500 x 340	892 x 500 x 340
Net weight		kg	43	44	45
Water pipe connector		Inch	R 1¼	R 1¼	R 1¼
A class pump	Number of speeds		Variable Speed	Variable Speed	Variable Speed
	Input power (Min / Max)	W	32 / 102	34 / 110	30 / 105
Heating water flow (ΔT=5 K. 35 °C)		L/min	25,8	34,4	45,9
Capacity of integrated electric heater		kW	3	9	9
Recommended fuse		A	15 / 30	15 / 30	15 / 30
Recommended cable size, supply 1 / 2		mm	5 x 1,5 / 3 x 1,5	5 x 1,5 / 5 x 1,5	5 x 1,5 / 5 x 1,5
Outdoor unit			**WH-UQ09HE8**	**WH-UQ12HE8**	**WH-UQ16HE8**
Sound power part load [1]	Heat	dB(A)	58	58	62
Sound power full load	Heat / Cool	dB(A)	61 / 63	62 / 64	65 / 68
Dimension	H x W x D	mm	1410 x 1283 x 320	1410 x 1283 x 320	1410 x 1283 x 320
Net weight		kg	151	151	161
Refrigerant (R410A) / CO_2 Eq.		kg / T	2,85 / 5,951	2,85 / 5,951	2,99 / 6,243
Pipe diameter	Liquid / Gas	Inch (mm)	3/8 (9,52) / 5/8 (15,88)	3/8 (9,52) / 5/8 (15,88)	3/8 (9,52) / 5/8 (15,88)
Pipe length range		m	3 ~ 30	3 ~ 30	3 ~ 30
Elevation difference (in/out)		m	20	20	20
Pipe length for additional gas		m	10	10	10
Additional gas amount		g/m	50	50	50
Operation range	Outdoor ambient	°C	-28 ~ +35	-28 ~ +35	-28 ~ +35
Water outlet	Heat / Cool	°C	20 - 60 / 5 - 20	20 - 60 / 5 - 20	20 - 60 / 5 - 20

Accessories (optional)	
PAW-TD20C1E5	Tank 200L - Stainless steel
PAW-TD30C1E5	Tank 300L - Stainless steel
PAW-TA20C1E5STD	Tank 200L - Enamelled
PAW-TA30C1E5STD	Tank 300L - Enamelled
PAW-3WYVLV-HW	3 way valve for DHW Tanks
CZ-NV1	3 way valve kit for inside of hydrokit

Accessories (optional)	
PAW-BTANK50L-2	Buffer tank 50L
CZ-TAW1	Aquarea Smart Cloud for remote control and maintenance through wireless or wired LAN
CZ-NS4P	Additional functions PCB
PAW-A2W-RTWIRED	Room thermostat
PAW-A2W-RTWIRELESS	Wireless LCD room thermostat

1) Sound power in accordance to 8112013,81312013 and EN12102-1:2017 at +7 °C.
EER and COP calculation is based in accordance to EN14511.

INTERNET CONTROL: Optional. GOOD DESIGN AWARD 2017: Indoor units All in One and Bi-bloc H Generation awarded with the prestigious Good Design Award 2017.

Aquarea High Performance Mono-bloc H Generation Single Phase. Heating and Cooling - MDC • R410A refrigerant

Technical focus

Optional Smartphone control — Maximum hydraulic module output temperature: 55 °C — Works at temperatures as low as -20 °C — Cooling temperature range 5 ~ 20 °C

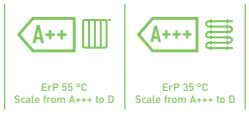

CZ-TAW1
Cloud connection. For user control and installer remote maintenance.

			Single Phase Heating and Cooling				
Outdoor unit			**WH-MDC05H3E5**	**WH-MDC07H3E5**	**WH-MDC09H3E5**	**WH-MDC12H6E5**	**WH-MDC16H6E5**
Heating capacity / COP (A +7 °C, W 35 °C)		kW / COP	5,00 / 5,08	7,00 / 4,52	9,00 / 4,29	12,00 / 4,74	16,00 / 4,28
Heating capacity / COP (A +7 °C, W 55 °C)		kW / COP	5,00 / 2,84	7,00 / 2,83	9,00 / 2,72	12,00 / 2,93	14,50 / 2,72
Heating capacity / COP (A +2 °C, W 35 °C)		kW / COP	4,80 / 3,36	6,60 / 3,30	6,80 / 3,18	11,40 / 3,44	13,00 / 3,28
Heating capacity / COP (A +2 °C, W 55 °C)		kW / COP	4,00 / 2,33	6,30 / 2,22	6,30 / 2,13	9,10 / 2,23	9,80 / 2,21
Heating capacity / COP (A -7 °C, W 35 °C)		kW / COP	4,70 / 2,85	5,50 / 2,70	6,40 / 2,60	10,00 / 2,73	11,40 / 2,57
Heating capacity / COP (A -7 °C, W 55 °C)		kW / COP	4,30 / 1,89	5,00 / 1,82	5,80 / 1,78	8,20 / 1,95	9,00 / 1,84
Cooling capacity / EER (A 35 °C, W 7 °C)		kW / EER	4,50 / 3,28	6,00 / 2,78	7,00 / 2,60	10,00 / 2,81	12,20 / 2,56
Cooling capacity / EER (A 35 °C, W 18 °C)		kW / EER	5,10 / 5,10	6,00 / 3,87	7,00 / 3,59	10,00 / 4,65	12,20 / 4,12
Seasonal energy efficiency - Heating average climate (W35 °C / W55 °C)		ηs %	199 / 139	190 / 130	190 / 130	190 / 134	190 / 130
		SCOP	5,05 / 3,55	4,83 / 3,33	4,83 / 3,33	4,83 / 3,43	4,83 / 3,33
Energy class heating average climate (W35 °C / W55 °C)		A+++ to D	A+++ / A++	A+++ / A++	A+++ / A++	A+++ / A++	A+++ / A++
Seasonal energy efficiency - Heating warm climate (W35 °C / W55 °C)		ηs %	237 / 161	225 / 160	225 / 160	245 / 159	245 / 169
		SCOP	6,00 / 4,10	5,70 / 4,08	5,70 / 4,08	6,20 / 4,05	6,20 / 4,30
Energy class heating warm climate (W35 °C / W55 °C)		A+++ to D	A+++ / A+++	A+++ / A+++	A+++ / A+++	A+++ / A+++	A+++ / A+++
Seasonal energy efficiency - Heating cold climate (W35 °C / W55 °C)		ηs %	160 / 115	160 / 115	160 / 115	168 / 121	168 / 121
		SCOP	4,08 / 2,95	4,08 / 2,95	4,08 / 2,95	4,28 / 3,10	4,28 / 3,10
Energy class heating cold climate (W35 °C / W55 °C)		A+++ to D	A++ / A+	A++ / A+	A++ / A+	A++ / A+	A++ / A+
Sound power part load [1]	Heat	dB(A)	55	59	59	65	65
Sound power full load	Heat / Cool	dB(A)	65 / 65	68 / 66	69 / 67	69 / 68	72 / 72
Dimension	H x W x D	mm	865 x 1283 x 320	865 x 1283 x 320	865 x 1283 x 320	1410 x 1283 x 320	1410 x 1283 x 320
Net weight		kg	94	104	104	140	140
Refrigerant (R410A) / CO_2 Eq. [2]		kg / T	1,30 / 2714	1,35 / 2819	1,35 / 2819	2,10 / 4,385	2,10 / 4,385
Water pipe connector		Inch	R 1¼	R 1¼	R 1¼	R 1¼	R 1¼
Pump	Number of speeds		Variable Speed	Variable Speed	Variable Speed	Variable Speed	Variable Speed
	Input power (Min / Max)	W	34 / 96	36 / 100	39 / 108	34 / 110	38 / 120
Heating water flow (ΔT=5 K. 35 °C)		L/min	14,3	20,1	25,8	34,4	45,9
Capacity of integrated electric heater		kW	3	3	3	6	6
Input Power	Heat	kW	0,985	1,55	2,10	2,53	3,74
	Cool	kW	1,37	2,16	2,69	3,56	4,76
Running and Starting current	Heat	A	4,7	7,2	9,6	11,7	16,9
	Cool	A	6,3	9,9	12,2	16,2	21,5
Current 1		A	13,0	21,0	22,9	24,0	26,0
Current 2		A	13,0	13,0	13,0	26,0	26,0
Recommended fuse		A	30 / 15	30 / 15	30 / 16	30 / 30	30 / 30
Recommended cable size, supply 1 / 2		mm²	3 x 4,0 or 6,0 / 3 x 4,0	3 x 4,0 or 6,0 / 3 x 4,0	3 x 4,0 or 6,0 / 3 x 4,0	3 x 4,0 or 6,0 / 3 x 4,0	3 x 4,0 or 6,0 / 3 x 4,0
Operation range	Outdoor ambient	°C	-20 ~ +35	-20 ~ +35	-20 ~ +35	-20 ~ +35	-20 ~ +35
Water outlet	Heat	°C	20 ~ 55	20 ~ 55	20 ~ 55	25 ~ 55	25 ~ 55
	Cool	°C	5 ~ 20	5 ~ 20	5 ~ 20	5 ~ 20	5 ~ 20

Accessories (optional)	
PAW-TD20C1E5-1	Tank 200L - Stainless steel
PAW-TD30C1E5-1	Tank 300L - Stainless steel
PAW-TA20C1E5STD-1	Tank 200L - Enamelled
PAW-TA30C1E5STD-1	Tank 300L - Enamelled
PAW-TD20B8E3-1	Combo Tank 185L + 80L - Enamelled
PAW-TD23B6E5	Combo Tank 230L + 60L - Stainless steel

Accessories (optional)	
PAW-3WYVLV-HW	3 way valve for DHW Tanks
PAW-BTANK50L-2	Buffer tank 50L
CZ-TAW1	Aquarea Smart Cloud for remote control and maintenance through wireless or wired LAN
PAW-A2W-RTWIRED	Room thermostat
PAW-A2W-RTWIRELESS	Wireless LCD room thermostat

1) Sound power in accordance to 8112013,81312013 and EN12102-1:2017 at +7 °C. 2) WH-MDC models are hermetically sealed.
EER and COP calculation is based in accordance to EN14511.

INTERNET CONTROL: Optional.

Aquarea T-CAP Mono-bloc H Generation Single Phase / Three Phase. Heating and Cooling - MXC

• R410A refrigerant

Technical focus

Optional Smartphone control — Maximum hydraulic module output temperature: 55 °C — Works at temperatures as low as -20 °C — Cooling temperature range 5 ~ 20 °C

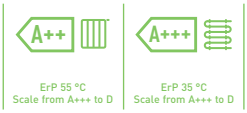

CZ-TAW1
Cloud connection. For user control and installer remote maintenance.

			Single Phase		Three Phase		
Outdoor unit			**WH-MXC09H3E5**	**WH-MXC12H6E5**	**WH-MXC09H3E8**	**WH-MXC12H9E8**	**WH-MXC16H9E8**
Heating capacity / COP (A +7 °C, W 35 °C)		kW / COP	9,00 / 4,84	12,00 / 4,74	9,00 / 4,84	12,00 / 4,74	16,00 / 4,28
Heating capacity / COP (A +7 °C, W 55 °C)		kW / COP	9,00 / 2,94	12,00 / 2,88	9,00 / 2,94	12,00 / 2,88	16,00 / 2,71
Heating capacity / COP (A +2 °C, W 35 °C)		kW / COP	9,00 / 3,59	12,00 / 3,44	9,00 / 3,59	12,00 / 3,44	16,00 / 3,10
Heating capacity / COP (A +2 °C, W 55 °C)		kW / COP	9,00 / 2,21	12,00 / 2,19	9,00 / 2,21	12,00 / 2,19	16,00 / 2,13
Heating capacity / COP (A -7 °C, W 35 °C)		kW / COP	9,00 / 2,85	12,00 / 2,72	9,00 / 2,85	12,00 / 2,72	16,00 / 2,49
Heating capacity / COP (A -7 °C, W 55 °C)		kW / COP	9,00 / 2,02	12,00 / 1,92	9,00 / 2,02	12,00 / 1,92	16,00 / 1,86
Cooling capacity / EER (A 35 °C, W 7 °C)		kW / EER	7,00 / 3,17	10,00 / 2,81	7,00 / 3,17	10,00 / 2,81	12,20 / 2,56
Cooling capacity / EER (A 35 °C, W 18 °C)		kW / EER	7,00 / 5,19	10,00 / 5,13	7,00 / 5,19	10,00 / 5,13	12,20 / 3,49
Seasonal energy efficiency - Heating average climate (W35 °C / W55 °C)		ηs %	181 / 130	170 / 130	181 / 130	170 / 130	160 / 125
		SCOP	4,60 / 3,33	4,33 / 3,33	4,60 / 3,33	4,33 / 3,33	4,08 / 3,20
Energy class heating average climate (W35 °C / W55 °C)		A+++ to D	A+++ / A++	A++ / A++	A+++ / A++	A++ / A++	A++ / A++
Seasonal energy efficiency - Heating warm climate (W35 °C / W55 °C)		ηs %	235 / 158	231 / 158	235 / 158	231 / 158	231 / 159
		SCOP	5,95 / 4,03	5,85 / 4,03	5,95 / 4,03	5,85 / 4,03	5,85 / 4,05
Energy class heating warm climate (W35 °C / W55 °C)		A+++ to D	A+++ / A+++	A+++ / A+++	A+++ / A+++	A+++ / A+++	A+++ / A+++
Seasonal energy efficiency - Heating cold climate (W35 °C / W55 °C)		ηs %	160 / 125	160 / 125	160 / 125	160 / 125	150 / 125
		SCOP	4,08 / 3,20	4,08 / 3,20	4,08 / 3,20	4,08 / 3,20	3,83 / 3,20
Energy class heating cold climate (W35 °C / W55 °C)		A+++ to D	A++ / A++	A++ / A++	A++ / A++	A++ / A++	A++ / A++
Sound power part load [1]	Heat	dB(A)	65	65	65	65	66
Sound power full load	Heat / Cool	dB(A)	68 / 67	69 / 68	68 / 67	69 / 68	72 / 71
Dimension	H x W x D	mm	1410 x 1283 x 320	1410 x 1283 x 320	1410 x 1283 x 320	1410 x 1283 x 320	1410 x 1283 x 320
Net weight		kg	142	142	151	151	164
Refrigerant (R410A) / CO_2 Eq. [2]		kg / T	2,30 / 4,802	2,30 / 4,802	2,30 / 4,802	2,30 / 4,802	2,35 / 4,907
Water pipe connector		Inch	R 1¼	R 1¼	R 1¼	R 1¼	R 1¼
Pump	Number of speeds		Variable Speed	Variable Speed	Variable Speed	Variable Speed	Variable Speed
	Input power (Min / Max)	W	32 / 102	34 / 110	32 / 102	34 / 110	38 / 120
Heating water flow (ΔT=5 K. 35 °C)		L/min	25,8	34,4	25,8	34,4	45,9
Capacity of integrated electric heater		kW	3	6	3	9	9
Input Power	Heat	kW	1,86	2,53	1,86	2,53	3,74
	Cool	kW	2,21	3,56	2,21	3,56	4,76
Running and Starting current	Heat	A	8,8	11,7	3,0	4,0	5,7
	Cool	A	10,4	16,5	3,5	5,3	7,1
Current 1		A	29,0	29,0	14,7	11,9	15,5
Current 2		A	13,0	26,0	13,0	13,0	13,0
Recommended fuse		A	30 / 30	30 / 30	16 / 16	16 / 16	16 / 16
Recommended cable size, supply 1 / 2		mm²	3 x 4,0 or 6,0 / 3 x 4,0	3 x 4,0 or 6,0 / 3 x 4,0	5 x 1,5 / 3 x 1,5	5 x 1,5 / 5 x 1,5	5 x 1,5 / 5 x 1,5
Operation range	Outdoor ambient	°C	-20 ~ +35	-20 ~ +35	-20 ~ +35	-20 ~ +35	-20 ~ +35
Water outlet	Heat	°C	20 ~ 60	20 ~ 60	20 ~ 60	20 ~ 60	20 ~ 60
	Cool	°C	5 ~ 20	5 ~ 20	5 ~ 20	5 ~ 20	5 ~ 20

Accessories (optional)	
PAW-TD20C1E5-1	Tank 200L - Stainless steel
PAW-TD30C1E5-1	Tank 300L - Stainless steel
PAW-TA20C1E5STD-1	Tank 200L - Enamelled
PAW-TA30C1E5STD-1	Tank 300L - Enamelled
PAW-TD20B8E3-1	Combo Tank 185L + 80L - Enamelled
PAW-TD23B6E5	Combo Tank 230L + 60L - Stainless steel

Accessories (optional)	
PAW-3WYVLV-HW	3 way valve for DHW Tanks
PAW-BTANK50L-2	Buffer tank 50L
CZ-TAW1	Aquarea Smart Cloud for remote control and maintenance through wireless or wired LAN
PAW-A2W-RTWIRED	Room thermostat
PAW-A2W-RTWIRELESS	Wireless LCD room thermostat

1) Sound power in accordance to 8112013,81312013 and EN12102-1:2017 at +7 °C. 2) WH-MXC models are hermetically sealed.
EER and COP calculation is based in accordance to EN14511.

INTERNET CONTROL: Optional.

Aquarea HT Bi-bloc F Generation Single Phase / Three Phase. Heating Only - SHF • R407C refrigerant

Technical focus

Remote controller functions — Efficient control of room temperature based on the outdoor temperature, indoor temperature using the Aquarea Manager — Optional Smartphone control — Maximum hydraulic module output temperature: 65 °C — Works at temperatures as low as -20 °C — Maximum 20 m rise between the outdoor unit and the hydraulic module

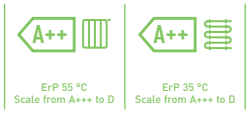

			Single Phase (Power to indoor)		Three Phase (Power to indoor)	
Kit			**KIT-WHF09F3E5**	**KIT-WHF12F6E5**	**KIT-WHF09F3E8**	**KIT-WHF12F9E8**
Heating capacity / COP (A +7 °C, W 35 °C)		kW / COP	9,00 / 4,64	12,00 / 4,46	9,00 / 4,64	12,00 / 4,46
Heating capacity / COP (A +7 °C, W 65 °C)		kW / COP	9,00 / 2,48	12,00 / 2,41	9,00 / 2,48	12,00 / 2,41
Heating capacity / COP (A +2 °C, W 35 °C)		kW / COP	9,00 / 3,45	12,00 / 3,26	9,00 / 3,45	12,00 / 3,26
Heating capacity / COP (A +2 °C, W 65 °C)		kW / COP	9,00 / 2,06	10,30 / 2,01	9,00 / 2,06	10,30 / 2,01
Heating capacity / COP (A -7 °C, W 35 °C)		kW / COP	9,00 / 2,74	12,00 / 2,52	9,00 / 2,74	12,00 / 2,52
Heating capacity / COP (A -7 °C, W 65 °C)		kW / COP	9,00 / 1,79	9,60 / 1,77	9,00 / 1,79	9,60 / 1,77
Seasonal energy efficiency - Heating average climate (W35 °C / W55 °C)		ηs %	153 / 125	150 / 125	153 / 125	150 / 125
		SCOP	3,90 / 3,20	3,83 / 3,20	3,90 / 3,20	3,83 / 3,20
Energy class heating average climate (W35 °C / W55 °C)		A+++ to D	A++ / A++	A++ / A++	A++ / A++	A++ / A++
Seasonal energy efficiency - Heating warm climate (W35 °C / W55 °C)		ηs %	191 / 156	188 / 156	191 / 156	188 / 156
		SCOP	4,85 / 3,98	4,78 / 3,98	4,85 / 3,98	4,78 / 3,98
Energy class heating warm climate (W35 °C / W55 °C)		A+++ to D	A+++ / A+++	A+++ / A+++	A+++ / A+++	A+++ / A+++
Seasonal energy efficiency - Heating cold climate (W35 °C / W55 °C)		ηs %	137 / 116	134 / 113	137 / 116	134 / 113
		SCOP	3,50 / 2,98	3,43 / 2,90	3,50 / 2,98	3,43 / 2,90
Energy class heating cold climate (W35 °C / W55 °C)		A+++ to D	A+ / A+	A+ / A+	A+ / A+	A+ / A+
Indoor unit			**WH-SHF09F3E5**	**WH-SHF12F6E5**	**WH-SHF09F3E8**	**WH-SHF12F9E8**
Sound pressure		dB(A)	33	33	33	33
Dimension	H x W x D	mm	892 x 502 x 353	892 x 502 x 353	892 x 502 x 353	892 x 502 x 353
Net weight		kg	46	47	47	48
Water pipe connector		Inch	R 1¼	R 1¼	R 1¼	R 1¼
A class pump	Number of speeds		7	7	7	7
	Input power (Min / Max)	W	38 / 100	40 / 106	38 / 100	40 / 106
Heating water flow (ΔT=5 K. 35 °C)		L/min	25,8	34,4	25,8	34,4
Capacity of integrated electric heater		kW	3	6	3	9
Recommended fuse		A	30 / 30	30 / 30	30 / 16	30 / 16
Recommended cable size, supply 1 / 2		mm	3 x 4,0 or 6,0 / 3 x 4,0	3 x 4,0 or 6,0 / 3 x 4,0	5 x 1,5 / 3 x 1,5	5 x 1,5 / 5 x 1,5
Outdoor unit			**WH-UH09FE5**	**WH-UH12FE5**	**WH-UH09FE8**	**WH-UH12FE8**
Sound power part load [1]		dB(A)	—	—	—	—
Sound power full load		dB(A)	66	67	66	67
Dimension	H x W x D	mm	1340 x 900 x 320	1340 x 900 x 320	1340 x 900 x 320	1340 x 900 x 320
Net weight		kg	104	104	110	110
Refrigerant (R407C) / CO_2 Eq.		kg / T	2,90 / 5,145	2,90 / 5,145	2,90 / 5,145	2,90 / 5,145
Pipe diameter	Liquid / Gas	Inch (mm)	3/8 (9,52) / 5/8 (15,88)	3/8 (9,52) / 5/8 (15,88)	3/8 (9,52) / 5/8 (15,88)	3/8 (9,52) / 5/8 (15,88)
Pipe length range		m	3 ~ 30	3 ~ 30	3 ~ 30	3 ~ 30
Elevation difference (in/out)		m	20	20	20	20
Pipe length for additional gas		m	10	10	10	10
Additional gas amount		g/m	70	70	70	70
Operation range	Outdoor ambient	°C	-20 ~ +35	-20 ~ +35	-20 ~ +35	-20 ~ +35
Water outlet	Heat	°C	25 ~ 65	25 ~ 65	25 ~ 65	25 ~ 65

Accessories (optional)	
PAW-TD20C1E5-1	Tank 200L - Stainless steel
PAW-TD30C1E5-1	Tank 300L - Stainless steel
PAW-TA20C1E5STD-1	Tank 200L - Enamelled
PAW-TA30C1E5STD-1	Tank 300L - Enamelled

Accessories (optional)	
PAW-3WYVLV-HW	3 way valve for DHW Tanks
PAW-BTANK50L-2	Buffer tank 50L
PAW-A2W-RTWIRED	Room thermostat
PAW-A2W-RTWIRELESS	Wireless LCD room thermostat

1) Sound power in accordance to 8112013,81312013 and EN12102-1:2017 at +7 °C.
EER and COP calculation is based in accordance to EN14511.

INTERNET CONTROL: Optional.

Aquarea HT Mono-bloc G Generation Single Phase. Heating Only - MHF

• R407C refrigerant

Technical focus

Efficient control of room temperature based on the outdoor temperature, indoor temperature using the Aquarea Manager — Optional Smartphone control — Maximum hydraulic module output temperature: 65 °C — Works at temperatures as low as -20 °C

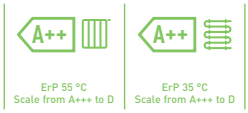

			Single Phase	
Outdoor unit			**WH-MHF09G3E5**	**WH-MHF12G6E5**
Heating capacity / COP (A +7 °C, W 35 °C)		kW / COP	9,00/4,64	12,00/4,46
Heating capacity / COP (A +7 °C, W 65 °C)		kW / COP	9,00/2,48	12,00/2,41
Heating capacity / COP (A +2 °C, W 35 °C)		kW / COP	9,00/3,45	12,00/3,26
Heating capacity / COP (A +2 °C, W 65 °C)		kW / COP	9,00/2,06	10,30/2,01
Heating capacity / COP (A -7 °C, W 35 °C)		kW / COP	9,00/2,74	12,00/2,52
Heating capacity / COP (A -7 °C, W 65 °C)		kW / COP	9,00/1,79	9,60/1,77
Seasonal energy efficiency - Heating average climate (W35 °C / W55 °C)		ηs %	153/125	150/125
		SCOP	3,90/3,20	3,83/3,20
Energy class heating average climate (W35 °C / W55 °C)		A+++ to D	A++/A++	A++/A++
Seasonal energy efficiency - Heating warm climate (W35 °C / W55 °C)		ηs %	191/156	188/156
		SCOP	4,85/3,98	4,78/3,98
Energy class heating warm climate (W35 °C / W55 °C)		A+++ to D	A+++/A+++	A+++/A+++
Seasonal energy efficiency - Heating cold climate (W35 °C / W55 °C)		ηs %	137/116	134/113
		SCOP	3,50/2,98	3,43/2,90
Energy class heating cold climate (W35 °C / W55 °C)		A+++ to D	A+/A+	A+/A+
Sound power part load [1]		dB(A)	—	—
Sound power full load		dB(A)	68	69
Dimension	H x W x D	mm	1410 x 1283 x 320	1410 x 1283 x 320
Net weight		kg	151	151
Refrigerant (R407C) / CO_2 Eq. [2]		kg / T	1,92/3,406	1,92/3,406
Water pipe connector		Inch	R 1¼	R 1¼
Pump	Number of speeds		7	7
	Input power (Min/Max)	W	—	—
Heating water flow (ΔT=5 K. 35 °C)		L/min	25,8	34,4
Capacity of integrated electric heater		kW	3	6
Input Power		kW	1,94	2,69
Running and Starting current		A	9,3	12,8
Current 1		A	28,5	29,0
Current 2		A	13,0	26,0
Recommended fuse		A	30/30	30/30
Recommended cable size, supply 1 / 2		mm²	3 x 4,0 or 6,0/3 x 4,0	3 x 4,0 or 6,0/3 x 4,0
Operation range	Outdoor ambient	°C	-20 ~ +35	-20 ~ +35
Water outlet	Heat	°C	25 ~ 65	25 ~ 65

Accessories (optional)	
PAW-TD20C1E5-1	Tank 200L - Stainless steel
PAW-TD30C1E5-1	Tank 300L - Stainless steel
PAW-TA20C1E5STD-1	Tank 200L - Enamelled
PAW-TA30C1E5STD-1	Tank 300L - Enamelled
PAW-TD20B8E3-1	Combo Tank 185L + 80L - Enamelled

Accessories (optional)	
PAW-TD23B6E5	Combo Tank 230L + 60L - Stainless steel
PAW-3WYVLV-HW	3 way valve for DHW Tanks
PAW-BTANK50L-2	Buffer tank 50L
PAW-A2W-RTWIRED	Room thermostat
PAW-A2W-RTWIRELESS	Wireless LCD room thermostat

1) Sound power in accordance to 8112013,81312013 and EN12102-1:2017 at +7 °C. 2) WH-MHF models are hermetically sealed.
EER and COP calculation is based in accordance to EN14511.

INTERNET CONTROL: Optional.

Smart fan coils

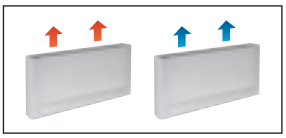

		PAW-AAIR-200-2			PAW-AAIR-700-2			PAW-AAIR-900-2		
Air flow	**Speed**	**Min**	**Med**	**Max**	**Min**	**Med**	**Max**	**Min**	**Med**	**Max**
Heating mode										
Total heating capacity	W	217,00	470,00	570,00	708,00	1032,00	1188,00	886,00	1420,00	1703,00
Water flow	kg/h	37,30	80,80	98,00	121,80	177,50	204,30	152,40	244,20	292,90
Water pressure drop	kPa	0,40	2,00	2,90	0,30	0,80	1,00	0,50	1,60	2,20
Inlet water temperature	°C	35	35	35	35	35	35	35	35	35
Outlet water temperature	°C	30	30	30	30	30	30	30	30	30
Inlet air temperature	°C	19,00	19,00	19,00	19,00	19,00	19,00	19,00	19,00	19,00
Outlet air temperature	°C	38,90	32,00	30,00	33,30	31,80	30,60	30,20	31,10	30,60
Cooling mode										
Total cooling capacity	W	237,00	345,00	555,00	756,00	1039,00	1204,00	1153,00	1518,00	1746,00
Sensible cooling capacity	W	230,00	314,00	504,00	646,00	903,00	1058,00	1061,00	1384,00	1598,00
Water flow	kg/h	40,00	59,00	95,00	129,00	178,00	207,00	198,00	261,00	300,00
Water pressure drop	kPa	0,40	2,00	2,90	1,00	2,00	2,00	6,00	9,00	12,00
Inlet water temperature	°C	10	10	10	10	10	10	10	10	10
Outlet water temperature	°C	15	15	15	15	15	15	15	15	15
Inlet air temperature	°C	27,00	27,00	27,00	27,00	27,00	27,00	27,00	27,00	27,00
Outlet air temperature	°C	15,00	17,00	18,00	14,00	16,00	17,00	16,00	17,00	18,00
Relative humidity of inlet air	%	47	47	47	47	47	47	47	47	47
Air flow	m³/min	0,90	1,90	2,70	2,60	4,20	5,30	4,10	6,10	7,70
Maximum input power	W	7,00	9,00	13,00	14,00	18,00	22,00	16,00	20,00	24,00
Sound pressure	dB(A)	23	33	40	24	36	42	25	36	44
Dimension (H x W x D)	mm		735 x 579 x 129			935 x 579 x 129			1135 x 579 x 129	
Net weight	kg		17			20			23	
3 Ways valve included			Yes			Yes			Yes	
Touch screen thermostat			Yes			Yes			Yes	

* Smart fan coils is produced by Innova.

Accessories (optional)	
PAW-AAIR-LEGS-1	Kits of 2 legs to support the Smart fan coil on the floor and to protect the water pipings

Accessories (optional)	
PAW-AAIR-RHCABLE	Motor connection cable for units with hydraulic connections on the right

Stylish Floor-standing fan coils with advanced controller

The slimline of Smart fan coils delivers high efficiency climate control.

With a depth of just under 13cm they are at the cutting edge of the market. Blending easily into the home, Smart fan coil's elegant design and product refinements are clear to see in every detail.

Exceptional ventilation efficiency means the motor uses considerably less energy (low wattage). The fan speed is continuously modulated by the temperature controller with proportional integral logic, with undoubted advantages for regulating the temperature and humidity in summer mode.

With standard cast radiators.

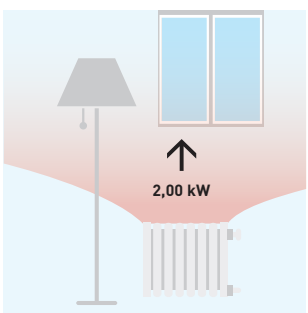

Water at 65 °C needed.

With Smart fan coil.

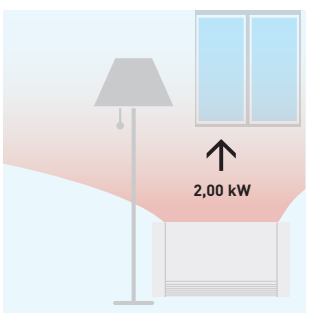

Water at 35 °C needed.

Technical focus:

- High heating capacity
- 3 fan speeds and capacities
- Exclusive design
- Extremely compact (only 12,9cm deep)
- Cooling and dehumidification functions possible (drain is needed)
- 3-way valve included (no overflow valve needed on the installation if more than 3 units installed)
- Touch screen thermostat

All temperature curves and capacity are available on www.panasonicproclub.com

Fan coils

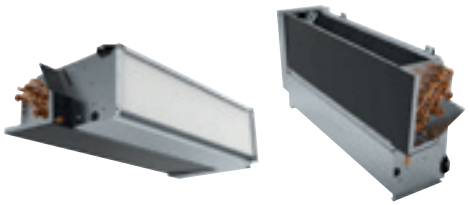

PAW-FC-903TC
Optional Controller.
Wired remote controller.

PAW-FC-RC1
Optional Controller.
Advanced wired remote controller.

			Compact units								High Static Pressure
Left side connection			PAW-FC-D11-1	PAW-FC-D15-1	PAW-FC-D24-1	PAW-FC-D28-1	PAW-FC-D40-1	PAW-FC-D55-1	PAW-FC-D65-1	PAW-FC-D90-1	PAW-FC-H150
Right side connection			PAW-FC-D11-1-R	PAW-FC-D15-1-R	PAW-FC-D24-1-R	PAW-FC-D28-1-R	PAW-FC-D40-1-R	PAW-FC-D55-1-R	PAW-FC-D65-1-R	PAW-FC-D90-1-R	PAW-FC-H150-R
Total cooling capacity [1]	Med/S-Hi	kW	1,0/1,5	1,2/1,7	2,0/2,5	2,4/3,2	3,2/4,6	4,6/5,8	6,1/7,3	6,1/8,1	11,9/14,8
Sensible cooling capacity [1]	Med/S-Hi	kW	0,8/1,1	0,9/1,3	1,5/1,9	1,8/2,3	2,2/3,3	3,3/4,5	4,3/5,1	4,6/6,3	9,6/12,9
Heating capacity [1]	Med/S-Hi	kW	1,4/2,0	1,5/2,2	2,4/3,1	2,9/4,0	4,1/5,7	5,3/7,1	7,9/9,3	8,1/11,6	14,9/19,9
Power consumption	S-Lo/Med/S-Hi	W	13/24/36	10/18/29	16/37/45	15/37/56	28/55/72	37/75/105	53/100/147	90/112/188	180/421/675
Fuse rating		A	2	2	2	2	2	2	2	2	6
Dimensions [2]	H x W x D	mm	220x570x430	220x570x430	220x753x430	220x938x430	220x1122x430	220x1307x430	220x1121x530	220x1316x530	376x1600x798
Weight [3]		kg	13	13	15	20	22	26	27	38	63
Sound power global	S-Lo/Med/S-Hi	dB(A)	33/40/49	31/43/50	30/45/52	30/44/51	34/46/56	38/51/58	43/56/61	50/55/64	52/64/71
Sound pressure global	S-Lo/Med/S-Hi	dB(A)	24/31/40	22/34/41	21/36/43	21/35/42	25/37/47	29/42/49	34/47/52	41/46/55	31/45/51
Static pressure	Max	Pa	30	30	50	50	70	70	70	70	110
Airflow [1]	Med/S-Hi	m³/h	190/283	179/265	274/390	357/499	486/716	640/933	893/1064	936/1397	2112/3176
Water pressure drop	Med/S-Hi	kPa	19,5/39,2	3,9/6,3	19,3/28,8	17,1/28	22,8/46,9	37,4/60,2	15,4/21,5	19,3/32,5	19,8/26,1
Fan speeds			3 speeds	3 speeds	3 speeds	3 speeds	3 speeds	3 speeds	3 speeds	3 speeds	3 speeds
Fan motor and number of speeds			AC 5 speeds	AC 5 speeds	AC 5 speeds	AC 5 speeds	AC 5 speeds	AC 5 speeds	AC 5 speeds	AC 5 speeds	AC 5 speeds
Drain pan and air filter			Included	Included	Included	Included	Included	Included	Included	Included	Included
Water connections		Inch	1/2	1/2	1/2	1/2	1/2	1/2	3/4	3/4	1

Accessories (optional)	
PAW-FC-RC1	Advanced wired remote controller for fan coil
PAW-FC-903TC	**NEW** Wired remote controller for fan coil
PAW-FC-2WY-11/55-1	2 way valve + drain pan (for PAW-FC-D11/15/24/28/40/55-1)
PAW-FC-2WY-65/90-1	2 way valve + drain pan (for PAW-FC-D65/90-1)

Accessories (optional)	
PAW-FC-2WY-150	2 way valve (for PAW-FC-H150)
PAW-FC-3WY-11/55-1	3 way valve + drain pan (for PAW-FC-D11/15/24/28/40/55-1)
PAW-FC-3WY-65/90-1	3 way valve + drain pan (for PAW-FC-D65/90-1)
PAW-FC-3WY-150	3 way valve (for PAW-FC-H150)

1) Airflow and capacity at 0 Pa of static pressure. 2) Including pan and electrical box. 3) Without water content. * Performances based on: Cooling: Air: 27 °C DB / 19 °C WB, Chilled water: 7 °C / 12 °C - Heating: Air: 20 °C DB, Hot water: 50 °C / 45 °C. ** Fan coil units are produced by Systemair.

1 Innovation for an optimum comfort

2 Low energy consumption fan

3 Efficient high-quality coil

4 Flexible installation: vertical or horizontal

Range of fan coil units

This advanced controller provides a higher level and performance. The fan coil range consists of a compact ducted range ideal for residential and commercial use and one model with high static pressure for commercial applications. All units are certified by Eurovent, include drain pan and filter and are equipped with a low consumption fan motor.
The D type is even more flexible thanks to an L-shaped drain pan. The unit can be installed either in a horizontal or in a vertical position.

Fan coil controller PAW-FC-RC1

This advanced controller provides a higher level of comfort in heating. The sensor can be used as a water flow sensor, stopping the fan when the water temperature is low, avoiding cold drafts in winter.
Also is ready to use J Generation feature of defrost mode and stop the fan coil.

Features:
· Room thermostat
· 3 outputs, 230 V relays for fan control
· 2 outputs, 230 V relays for heating / cooling control
· Modbus RTU slave
· 1 DI for presence detection (key card switch)
· 1 AI for sensor

Sanitary Tanks

Combo Tank.

The best option to combine with Mono-bloc units. DHW tank with buffer tank. Designed for retrofit applications, the DHW tank with a buffer tank is particularly suitable for fast integration on an existing installation. This tank includes a 3-way valve and an "A" Class pump. Easy to install, nice looking, high efficiency for DHW production and for heating.

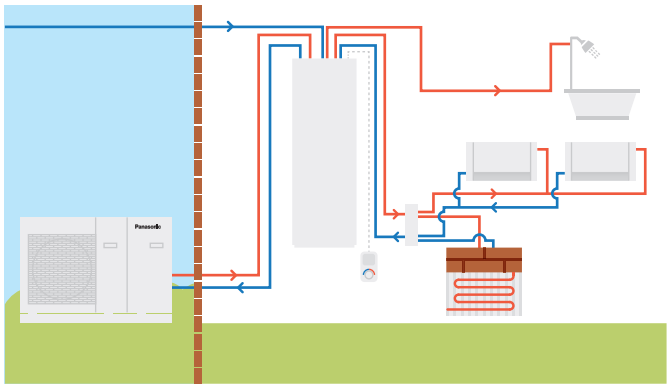

		Enamelled		NEW Stainless steel	
Model		**PAW-TD20B8E3-1**		**PAW-TD23B6E5**	
Dimension H x W x D	mm	1770 x 640 x 690		1750 x 600 x 646	
Weight (empty)	kg	150		111	
Volume	L	185 + 80		230 + 60	
Power supply	V, Phase, Hz	230, 1, 50		230, 1, 50	
		Hot water tank	**Buffer tank**	**Hot water tank**	**Buffer tank**
Volume	L	185	80	230	60
Max working pressure	MPa (bar)	0,8 (8)	0,6 (6)	1,0 (10)	0,3 (3,0)
Pressure test	MPa (bar)	1,2 (12)	0,9 (9)	1,5 (15)	0,39 (3,9)
Max working temp	°C	90	90	80	80
Connections	mm	Ø22	Ø22	Ø22	Ø22, copper
Material		S 275 JR vitrified	S235 JR	EN 14521	EN 14521
Insulation	Material, t=mm	PUR, 50	PUR 40 mm	PUR, 50	PUR, 50
Heating coil surface	m²	2,1	—	1,8	—
Electrical heater	W	3000	—	2800	—
Energy loss at 65 °C	kWh/24h	1,3	—	1,25	—
Energy efficiency class (from A+ to F)		**B**	**B**	**B**	**A**
Standing loss	W	53	46	52	29

1) EU Regulation 812/2013. 2) Tested pursuant to EN 12897:2006. * Enamelled Combo Tank is produced by Lapesa. Stainless Steel Combo Tank is produced by OSO.

Enamelled Tanks.

		Enamelled Tank				Enamelled 2 coils Tank (for bivalent Solar + HP)	NEW Square Tank
Model		**PAW-TA15C1E5STD**	**PAW-TA20C1E5STD**	**PAW-TA30C1E5STD**	**PAW-TA40C1E5STD**	**PAW-TA30C2E5STD**	**PAW-TA20C1E5C**
Water volume	L	150	200	290	380	350	200
Maximum water temperature	°C	95	95	95	95	95	95
Dimensions (Hight / Diameter)	mm	1210/520	1340/610	1800/610	1835/670	1835/670	1550 x 600 x 600
Weight / filled with water	kg	109/254	90/280	120/389	191/572	169/519	134 / 327
Electric heater	kW	—	3,00	3,00	3,00	3,00	—
Power supply	V	—	230	230	230	230	—
Material inside tank		Enamelled	Enamelled	Enamelled	Enamelled	Enamelled	Enamelled
Exchange surface	m²	1,2	1,8	2,6	3,8	3,5 / 1,2	1,83
Energy loss at 65 °C [1]	kWh/24h	1,45	1,37	1,61	1,76	1,76	1,37
3 way valve accessory PAW-3WYVLV-HW or CZ-NV1		Optional	Optional	Optional	Optional	Optional	Built-in 3 way valve
20 m temperature sensor cable included		Yes	Yes	Yes	Yes	Yes	Yes
Energy losses	W	60	57	67	73	73	57
Energy Efficiency Class (from A+ to F)		**C**	**B**	**B**	**B**	**B**	**B**
Warranty		2 Years	2 Years	2 Years	2 Years	2 Years	2 Years
Maintenance required		Every 2 years	Every 2 years	Every 2 years	Every 2 years	Every 2 years	Every 2 years

1) Insulated tested under EN12897. ** Enamelled Tanks are produced by AEmail.

Stainless Steel Tank.

Model		**PAW-TD20C1E5-1**	**PAW-TD30C1E5-1**
Water volume	L	192	280
Maximum water temperature	°C	75	75
Dimensions (Hight / Diameter)	mm	1270/595	1750/595
Weight / filled with water	kg	53/—	65/—
Electric heater	kW	1,50	1,50
Power supply	V	230	230
Material inside tank		Stainless steel	Stainless steel
Exchange surface	m²	1,8	1,8
Energy loss at 65 °C [1]	kWh/24h	0,99	1,13
3 way valve accessory PAW-3WYVLV-HW or CZ-NV1		Optional	Optional
20 m temperature sensor cable included		Yes	Yes
Energy losses	W	42	46
Energy Efficiency Class (from A+ to F)		**A**	**A**
Warranty		2 Years	2 Years
Maintenance required		No	No

1) Insulated tested under EN12897. ** Stainless Steel Tanks and Buffer Tank are produced by OSO.

New Buffer tank.

Model		**PAW-BTANK50L-2**
Capacity	L	48
Energy losses	W	42
Energy Efficiency Class (from A+ to F)		**B**
Material		Stainless Steel
Dimensions (Hight / Diameter)	mm	636 / 430
Net weight	kg	—

* Automatic air vent and drain cock are included. Built-in pocket sensor (sensor not included).

Accessories for Sanitary tanks

PAW-3WYVLV-HW	3 way valve for DHW Tanks
CZ-NV1	3 way valve kit for inside the hydrokit

Heat Recovery Ventilation unit

1 Comfort
High thermal comfort.

2 Energy saving
Lower heating requirements thanks to lower heat losses.

3 Space saving
It can be installed over the DHW square tank or the All-in-one Compact indoor unit.

4 Better user interface
Possibility to control the ventilation unit and the heating system with one single remote controller.

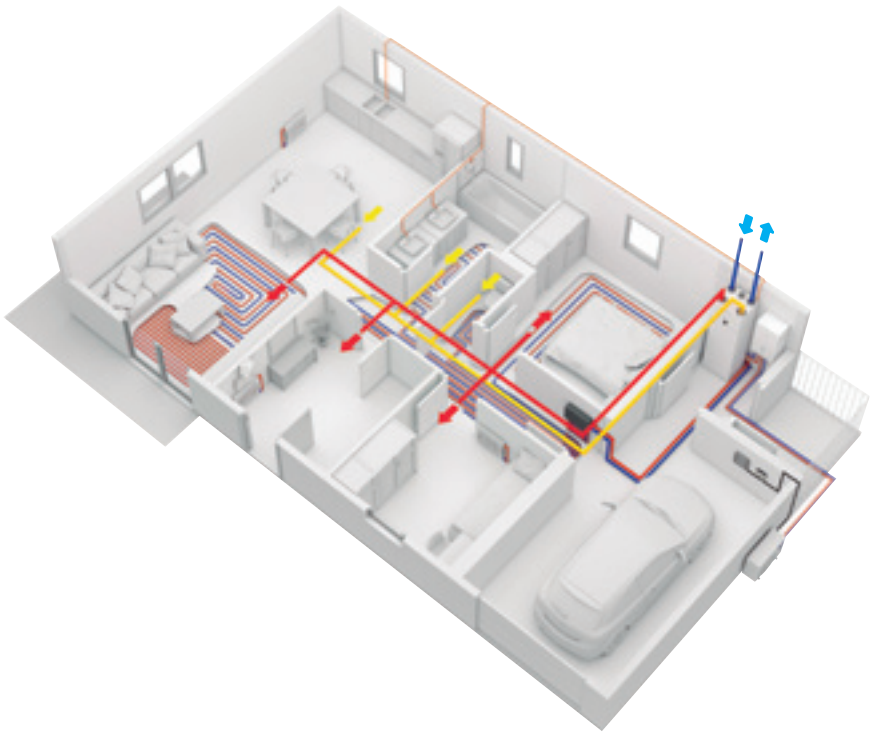

Ventilation systems with heat recovery offer users a high degree of living comfort thanks to temperature controlled and clean air. Heat recovery units are ideal for use in houses, for these owners who are looking for high performance and maximum comfort.

Heat Recovery Ventilation unit		**PAW-A2W-VENTA-R**	**PAW-A2W-VENTA-L**
Nominal airflow rate	m³/h	204 @ 50 Pa	
Maximum airflow rate	m³/h	292 @ 100 Pa	
SPF		1,24 @ 204 m³/h	
Heat exchanger rotor drive type		Variable speed	
Exchanger type		Rotating	
Heat recovery efficiency		84 %	
Power supply	V / Hz	230 / 50 / 1 phase	
Power consumption	W	176	
Energy Class, basic unit		**A**	
Energy Class, unit with local control on demand		**A**	
Noise level	dB	38	
Dimensions (W x H x D)	mm	598 x 450 x 500	
Weight	kg	46	
Mounting position		Vertical	
Supply side		Right	Left
Duct connections	mm	DN125	
Filter class, supply air		F7/ePM1 60 %	
Filter class, extract air		M5/ePM10 50 %	
Minimum outdoor temperature	°C	-20	

Accessories (optional)	
PAW-VEN-FLTKIT	Supply and extract filters kit
PAW-VEN-ACCPCB	Optional PCB for additional functions
PAW-VEN-DPL	HRV touch control panel. White frame (cable must be ordered separately)
PAW-VEN-CBLEXT12	Cable with plug for electrical connection between unit and control panel, type CE and CD (12 m)
PAW-VEN-DIVPLG	Twin plugs for installation of several control panels type CD or CE for one unit

Accessories (optional)	
PAW-VEN-DPLBOX	HRV touch control panel wall-mounted kit
PAW-VEN-S-CO2RH-W	CO_2 RH wall-mounted sensor
PAW-VEN-S-CO2-W	CO_2 wall-mounted sensor
PAW-VEN-S-CO2-D	CO_2 duct sensor
PAW-VEN-PTC12	1,2 kW PTC heater DN125
PAW-VEN-PTC08	0,8 kW PTC heater DN125
PAW-VEN-WBRK	Wall bracket kit for stand-alone installation on the wall

*** Heat recovery efficiency according to EN 13141-7. ** Heat Recovery Ventilation unit is produced by RVU & square tank by AEmail.**

With an optimum exchange program, the ventilation unit guides air extracted from the kitchen and bathroom to the outside. Fresh outdoor air is drawn into the unit via the pipe system. Here 84 % of the heat from the extract air is transferred to the supply air via a heat exchanger, which is then supplied back to the living and sleeping quarters.

Main features:

- Heat recovery unit designed for ventilated areas up to approximately 140 m².
- High energy-efficiency rotary heat exchanger with EC - technology fans
- Moisture transfer function to minimize condensation in supply air during wintertime
- Control via touch display and Startup Wizard for easy commissioning
- Modbus communication via RS-485
- Option to control Aquarea H and J series heat pumps from PAW-A2W-VENTA control panel if both units are connected via Modbus interface (PAW-AW-MBS-H and PAW-VEN-ACCPCB required)

The built in humidity sensor in extract air can be used for demand control.

Control

All settings and features accessible via a control panel, integrated into the front cover.

- Color touch screen with a user-friendly interface
- The option for connecting one or more external control panels is available
- Separate user level for authorized installers and service personnel
- MANUAL and AUTO mode or choose preferred settings from the pre-configured user modes
- If Aquarea H and J series heat pumps are connected with PAW-A2W-VENTA, the heat pump control options will appear on the home screen in a separate tab

The unit can be mounted on a PAW-TA20C1E5C, on a WH-ADC0309J3E5C or installed on the wall (PAW-VEN-WBRK is needed).

DHW Stand Alone

New DHW Stand Alone: highly efficient heat pump water heater.

The wide range of DHW Stand Alone heat pump is a great solution to adapt to any type of family house. The wall type is available in 100 and 150L capacities, and the Floor-standing in 200 and 270L. For reaching even more efficient use the 270L is available in additional coil, it is able to connect solar water production.

- A+ Highly efficient domestic hot water heat pump
- Provides reduced power consumption by 75 % compared with traditional electric water heater
- Easy to install
- Being CFC-free, this water heater is environmentally friendly

1 Energy saving

- Digital control panel with energy consumption monitoring
- Photovoltaic function
- Compatible with ducted fresh air intake installations
- Boiler/Solar Coil (only PAW-DHW270C1F)

2 Comfort

- Different modes of operation based on user needs
- Mode AUTO: Intelligent Temperature Set Point, thanks to monitoring hot water usage
- Mode BOOST, Mode ECO and Mode ABSENCE

3 Durability

- Diamond-quality enamel lining the inner tank
- Pressure relief valve which provides safety if any malfunctions or pressure rise
- Dielectric union preventing corrosion
- Specific lip gasket preventing rust around the flange

Model		Wall-mounted		Floor-standing		
Reference		**PAW-DHW100W-1**	**PAW-DHW150W-1**	**PAW-DHW200F**	**PAW-DHW270F**	**PAW-DHW270C1F**
Nominal capacity	L	100	150	200	270	263
Dimensions (H x W x D)	mm	1209 x 522 x 538	1527 x 522 x 538	1617 x 620 x 665	1957 x 620 x 665	1957 x 620 x 665
Empty weight	kg	57	66	80	92	111
Hot and cold connection		¾" M	¾" M	¾" M	¾" M	¾" M
Anticorrosion system	Anode	Magnesium	Magnesium	Magnesium	Magnesium	Magnesium
Rated water pressure	Mpa (bar)	0,8 (8)	0,8 (8)	0,8 (8)	0,8 (8)	0,8 (8)
Electrical connection	V / Hz	230/50	230/50	230/50	230/50	230/50
Total maximum power	W	1550	1950	2300	2300	2300
Maximal power heat pump	W	350	350	700	700	700
Power electric heating element	W	1200	1600	1600	1600	1600
Heat pump water temperature range	°C	50 ~ 62	50 ~ 62	50 ~ 62	50 ~ 62	50 ~ 62
Heat pump air temperature range	°C	-5 ~ +43	-5 ~ +43	-5 ~ +43	-5 ~ +43	-5 ~ +43
Duct diameter	mm	125	125	160	160	160
Air flow (without duct)	m³/h	160	160	310/390	310/390	310/390
Load losses acceptable on ventilation circuit, without affecting performance	Pa	70	70	25	25	25
Sound power level [1]	dB(A)	45	45	53	53	53
R134a refrigerant capacity	kg	0,52	0,58	0,80	0,86	0,86
Refrigerant volume in tons of CO_2 equivalent	TCO_2 Eq.	0,74	0,83	0,50	0,54	0,54
Refrigerant weight per liter	kg/L	0,0052	0,0039	0,0040	0,0032	0,0032
Hot water quantity at 40 °C: V40td	L	151,0	182,0	265,5	361,2	357,9
Acoustic power ErP [2]	dB(A)	45	45	53	53	53
Energy Efficiency Class (from A+ to F)		**A+**	**A+**	**A+**	**A+**	**A+**
Connectable to PV		Yes	Yes	Yes	Yes	Yes
Additional coil exchanger connection		—	—	—	—	1''M
Additional coil surface	m²	—	—	—	—	1,2
Performance at 7 °C air temperature		**(EN 16147) ducted at 25 Pa**		**(CDC LCIE 103-15/C) ducted at 30 Pa [3]**		
Coefficient of performance (COP) according load profile		2,47 - M	3,05 - L	2,79 - L	3,16 - XL	3,05 - XL
Standby power input (P_{es})	W	18	24	32	29	33
Heating up time (t_h)	h. Min	6h47	10h25	07h11	10h39	11h04
Reference hot water temperature (T_{ref})	°C	52,7	53,2	52,7	53,1	52,9
Flow rate (air)	m³/h	140	110	320	320	320
Performance at 15 °C air temperature (EN 16147)						
Coefficient of performance (COP) according load profile		2,88 - M	3,28 - L	3,05 - L	3,61 - XL	3,44 - XL
Standby power input (P_{es})	W	19	25	30	30	33
Heating up time (t_h)	h. Min	6h07	9h29	6h24	8h34	8h40
Reference hot water temperature (T_{ref})	°C	52,6	53,4	52,8	53,0	53,1
Flow rate (air)	m³/h	140	110	320	320	320

Accessories (optional)	
PAW-DHW-STAND	Rack for suspended device for 100 and 150 liters models

1) According to ISO3744. 2) Compliant with EN 16147 conditions. 3) Performance measured for a water heater from 10 °C to T_{ref} according to the protocol of the NF Electricity Performance Mark specifications No.LCIE 103-15C, selfheating thermodynamic water heaters (based on standard EN 16147). * DHW Stand Alone is produced by S.A.T.E.

Ideal for small surfaces

Suitable for all installations (adapted to small surfaces, low ceiling, corner).

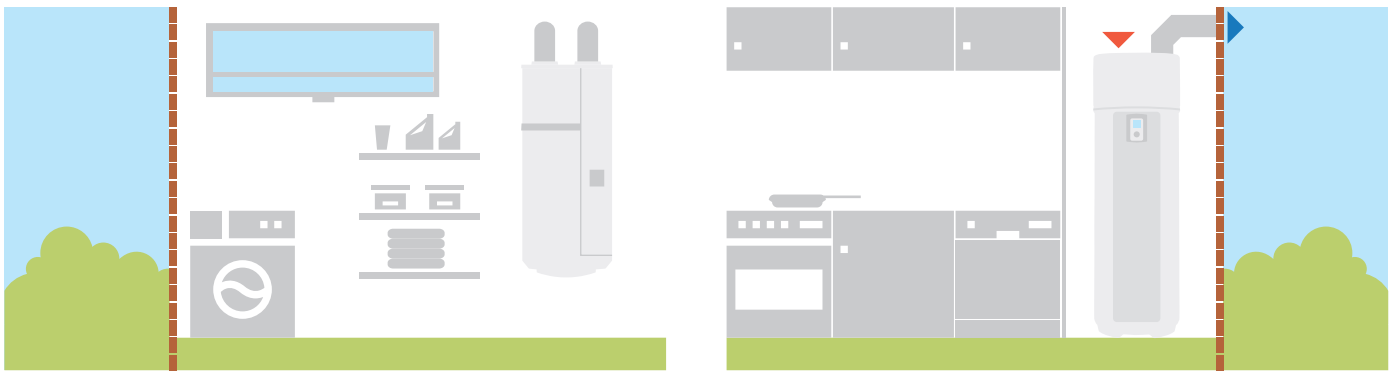

Accessories and Control

All in One accessories

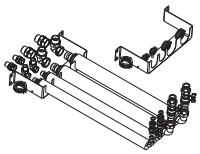

PAW-ADC-PREKIT-H
Flexible pipings and wall mounting plate for All in One H Generation.

PAW-ADC-PREKIT-1
Flexible pipings and wall mounting plate for All in One J Generation (not compatible with WH-ADC0309J3E5C).

PAW-ADC-CV150
Decorative magnetic side cover.

Special outdoor supports

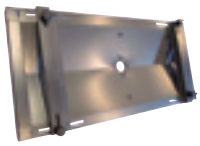

PAW-WTRAY
Tray for condenser water compatible with base ground support.

PAW-GRDSTD40
Outdoor elevation platform.

PAW-GRDBSE20
Outdoor base ground support for noise and vibration absorption (600 x 95 x 130 mm, 500kg).

PCB's for additional functions

CZ-NS4P
PCB for advanced functions in J and H Generation.

Deice accessories

CZ-NE1P
Base pan heater (for all old Bi-bloc and Mono-bloc, not for the 3 and 5 kW).

CZ-NE2P
Base pan heater (for Bi-bloc 3 kW and 5 kW).

CZ-NE3P
Base pan heater for J and H Generation.

Hydraulic accessories

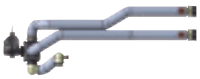

CZ-NV1
3 way valve kit for inside the hydrokit.

PAW-3WYVLV-HW
3 way valve for DHW Tanks.

PAW-A2W-AFVLV
Anti-freeze valve.

Smart fan coil accessories

PAW-AAIR-LEGS-1
Kits of 2 legs to support the Smart fan coil on the floor and to protect the water pipings.

PAW-AAIR-RHCABLE
Motor connection cable for units with hydraulic connections on the right.

Fan coil accessories

PAW-FC-903TC
NEW Wired remote controller for fan coil.

PAW-FC-RC1
Advanced wired remote controller for fan coil.

PAW-FC-2WY-11/55-1
2 way valve + drain pan (for PAW-FC-D11/15/24/28/40/55-1).

PAW-FC-2WY-65/90-1
2 way valve + drain pan (for PAW-FC-D65/90-1).

PAW-FC-2WY-150
2 way valve (for PAW-FC-H150).

PAW-FC-3WY-11/55-1
3 way valve + drain pan (for PAW-FC-D11/15/24/28/40/55-1).

PAW-FC-3WY-65/90-1
3 way valve + drain pan (for PAW-FC-D65/90-1).

PAW-FC-3WY-150
3 way valve (for PAW-FC-H150).

Sanitary tank accessories

PAW-TS1
Tank sensor with 6 m cable length.

PAW-TS2
Tank sensor with 20 m cable length.

PAW-TS4
Tank sensor with 6 m cable length and only 6 mm diameter.

CZ-TK1
Temperature sensor kit for third party tank (with copper pocket and 6 m length sensor cable).

Heat Recovery Ventilation accessories

PAW-VEN-DPL
HRV touch control panel. White frame (cable must be ordered separately).

PAW-VEN-S-CO2RH-W
CO_2 RH wall-mounted sensor.

PAW-VEN-S-CO2-W
CO_2 wall-mounted sensor.

PAW-VEN-CBLEXT12
Cable with plug for electrical connection between unit and control panel, type CE and CD (12 m).

PAW-VEN-S-CO2-D
CO_2 duct sensor.

PAW-VEN-DIVPLG
Twin plugs for installation of several control panels type CD or CE for one unit.

PAW-VEN-FLTKIT
Supply and extract filters kit.

PAW-VEN-ACCPCB
Optional PCB for additional functions.

PAW-VEN-DPLBOX
HRV touch control panel wall-mounted kit.

PAW-VEN-PTC12
1,2 kW PTC heater DN125.

PAW-VEN-PTC08
0,8 kW PTC heater DN125.

PAW-VEN-WBRK
Wall bracket kit for stand-alone installation on the wall.

DHW Stand Alone accessories

PAW-DHW-STAND
Rack for suspended device for 100 and 150 liters models.

Connectivity solutions

CZ-TAW1
Aquarea Smart Cloud for remote control and maintenance through wireless or wired LAN.

CZ-TAW1-CBL
10 m extension cable for CZ-TAW1.

PAW-AW-KNX-1i
KNX Interface compatible with G and F Generation.

PAW-AW-KNX-H
KNX Interface for J and H Generation.

PAW-AW-MBS-1
Modbus interface compatible with G and F Generation.

PAW-AW-MBS-H
Modbus Interface for J and H Generation.

Cascade Controller

PAW-A2W-CMH
Modbus IP for BMS communication.

Room thermostats

PAW-A2W-RTWIRED
Wired LCD room thermostat with weekly timer.

PAW-A2W-RTWIRELESS
Wireless LCD room thermostat with weekly timer.

H Generation sensors

PAW-A2W-TSOD
Outdoor ambient sensor.

PAW-A2W-TSRT
Zone room sensor.

PAW-A2W-TSHC
Zone water sensor.

PAW-A2W-TSSO
Solar sensor.

PAW-A2W-TSBU
Buffer tank sensor.

Aquarea Manager accessories (not compatible with J and H Generation)

PAW-HPM1
Aquarea Manager with LCD.

PAW-HPM2
Aquarea Manager without LCD.

PAW-HPMED
Touch screen.

PAW-HPMB1
Buffer tank sensor.

PAW-HPMDHW
Buffer tank sensor with well.

PAW-HPMAH1
Water flow pipe sensor for heating circuit.

PAW-HPMUH
Outdoor temperature sensor.

PAW-HPMINT-U
Interface to connect Aquarea Manager to Heat pump Aquarea Bi-bloc (HPM can control all parameters from HP).

PAW-HPMINT-M
Interface to connect Aquarea Manager to Heat pump Aquarea Mono-bloc (HPM can control all parameters from HP).

PAW-HPMINT-F
Interface to connect Aquarea Manager to Heat pump Aquarea Mono-bloc and Bi-bloc F type (HPM can control all parameters from HP).

PAW-HPMSOL1
Buffer tank sensor solar (with higher temperature range).

PAW-HPMR4
Room sensor + set point adaptation.

PAW-DEWPOINTSENSOR
Dew point sensor.

Heating & Cooling capacity tables

Based on outlet temperature and outside temperature.

Aquarea High Performance Bi-bloc J Generation Single Phase. Heating and Cooling • R32 refrigerant

WH-UD03JE5															
Tamb	**HC**	**IP**	**COP**	**HC**	**IP**	**COP**	**HC**	**IP**	**COP**	**HC**	**IP**	**COP**	**HC**	**IP**	**COP**
LWC	**25**	**25**	**25**	**35**	**35**	**35**	**45**	**45**	**45**	**55**	**55**	**55**	**60**	**60**	**60**
-20	2,50	1,11	2,25	2,52	1,31	1,92	2,24	1,59	1,41	2,12	1,80	1,18	—	—	—
-15	3,00	1,14	2,63	3,20	1,37	2,34	3,00	1,62	1,85	2,75	1,92	1,43	—	—	—
-7	2,99	0,91	3,29	3,30	1,18	2,80	3,25	1,47	2,21	3,20	1,79	1,79	3,00	1,88	1,60
2	2,92	0,69	4,23	3,20	0,88	3,64	3,20	1,13	2,83	3,20	1,46	2,19	3,15	1,67	1,89
7	3,09	0,49	6,31	3,20	0,60	5,33	3,20	0,84	3,81	3,20	1,14	2,81	2,95	1,22	2,42
25	3,27	0,23	14,22	3,27	0,38	8,61	3,61	0,63	5,73	4,06	1,11	3,66	4,03	1,14	3,54
WH-UD05JE5															
Tamb	**HC**	**IP**	**COP**	**HC**	**IP**	**COP**	**HC**	**IP**	**COP**	**HC**	**IP**	**COP**	**HC**	**IP**	**COP**
LWC	**25**	**25**	**25**	**35**	**35**	**35**	**45**	**45**	**45**	**55**	**55**	**55**	**60**	**60**	**60**
-20	3,60	1,57	2,29	3,51	1,81	1,94	3,16	1,99	1,59	2,46	2,11	1,17	—	—	—
-15	4,46	1,72	2,59	4,20	1,93	2,18	3,75	2,18	1,72	3,00	2,12	1,42	—	—	—
-7	4,18	1,33	3,14	4,20	1,62	2,59	3,80	1,82	2,09	3,55	2,08	1,71	3,25	2,15	1,51
2	4,07	1,01	4,03	4,20	1,32	3,18	4,20	1,64	2,56	4,10	2,06	1,99	4,10	2,21	1,86
7	5,20	0,83	6,27	5,00	1,00	5,00	5,00	1,41	3,55	5,00	1,84	2,72	4,25	2,10	2,02
25	5,00	0,52	9,62	5,00	0,72	6,94	5,30	0,98	5,41	5,60	1,27	4,41	4,80	1,27	3,78
WH-UD07JE5															
Tamb	**HC**	**IP**	**COP**	**HC**	**IP**	**COP**	**HC**	**IP**	**COP**	**HC**	**IP**	**COP**	**HC**	**IP**	**COP**
LWC	**25**	**25**	**25**	**35**	**35**	**35**	**45**	**45**	**45**	**55**	**55**	**55**	**60**	**60**	**60**
-20	4,33	1,64	2,64	3,98	1,88	2,12	3,83	2,26	1,69	3,30	2,77	1,19	—	—	—
-15	5,16	1,69	3,05	4,75	2,00	2,38	4,65	2,40	1,94	4,50	2,96	1,52	—	—	—
-7	5,64	1,56	3,62	5,60	1,95	2,87	5,50	2,30	2,39	5,25	2,70	1,94	4,98	2,90	1,72
2	6,80	1,57	4,33	6,85	2,01	3,41	6,75	2,40	2,81	6,20	2,80	2,21	6,18	2,91	2,12
7	7,55	1,15	6,57	7,00	1,47	4,76	7,00	1,96	3,57	7,00	2,48	2,82	6,86	2,75	2,49
25	7,00	0,62	11,29	6,88	0,90	7,64	7,00	1,33	5,26	6,92	1,75	3,95	6,83	1,90	3,59
WH-UD09JE5-1															
Tamb	**HC**	**IP**	**COP**	**HC**	**IP**	**COP**	**HC**	**IP**	**COP**	**HC**	**IP**	**COP**	**HC**	**IP**	**COP**
LWC	**25**	**25**	**25**	**35**	**35**	**35**	**45**	**45**	**45**	**55**	**55**	**55**	**60**	**60**	**60**
-20	4,95	1,93	2,56	6,20	3,00	2,07	5,28	3,09	1,71	4,23	3,33	1,27	—	—	—
-15	7,58	2,70	2,81	7,40	3,20	2,31	6,29	3,26	1,93	5,20	3,42	1,52	—	—	—
-7	6,39	1,81	3,53	6,12	2,20	2,78	5,88	2,61	2,25	5,90	3,06	1,93	5,65	3,24	1,74
2	6,96	1,61	4,32	7,00	2,06	3,40	6,85	2,50	2,74	6,30	2,92	2,16	7,26	3,33	2,18
7	9,44	1,55	6,09	9,00	2,01	4,48	9,00	2,61	3,45	8,95	3,22	2,78	8,62	3,47	2,48
25	8,27	0,95	8,71	8,12	1,29	6,29	8,71	1,80	4,84	7,83	1,97	3,97	6,08	1,72	3,53

Tamb: Ambient Temperature (°C). LWC: Leaving Water Condenser Temperature (°C). HC: Heating Capacity (kW). CC: Cooling Capacity (kW). IP: Power Input (kW)
This data is measured by Panasonic in accordance with EN14511-2 standard. This data is for reference purpose only, and does not guarantee the performance.

Aquarea High Performance Bi-bloc J Generation Single Phase. Heating and Cooling • R32 refrigerant

WH-UD03JE5									
Tamb	**CC**	**IP**	**EER**	**CC**	**IP**	**EER**	**CC**	**IP**	**EER**
LWC	**7**	**7**	**7**	**14**	**14**	**14**	**18**	**18**	**18**
16	3,56	0,57	6,25	4,32	0,55	7,85	3,47	0,41	8,46
25	3,29	0,73	4,51	4,06	0,72	5,64	3,27	0,52	6,29
35	3,20	0,91	3,52	3,56	0,93	3,83	3,20	0,68	4,71
43	2,68	1,06	2,53	3,34	1,09	3,06	2,79	0,82	3,40
WH-UD05JE5									
Tamb	**CC**	**IP**	**EER**	**CC**	**IP**	**EER**	**CC**	**IP**	**EER**
LWC	**7**	**7**	**7**	**14**	**14**	**14**	**18**	**18**	**18**
16	3,59	0,56	6,41	4,23	0,54	7,83	4,79	0,52	9,21
25	4,61	1,18	3,91	5,54	1,21	4,58	5,23	0,90	5,81
35	4,50	1,50	3,00	5,08	1,51	3,36	4,80	1,12	4,29
43	3,77	1,71	2,20	4,94	1,80	2,74	4,30	1,35	3,19
WH-UD07JE5									
Tamb	**CC**	**IP**	**EER**	**CC**	**IP**	**EER**	**CC**	**IP**	**EER**
LWC	**7**	**7**	**7**	**14**	**14**	**14**	**18**	**18**	**18**
16	5,20	0,81	6,42	6,62	0,73	9,07	7,04	0,72	9,78
25	7,40	1,73	4,28	9,30	1,78	5,22	7,65	1,10	6,95
35	6,70	2,21	3,03	8,10	2,23	3,63	6,70	1,42	4,72
43	4,50	1,99	2,26	5,44	2,00	2,72	5,10	1,71	2,98
WH-UD09JE5-1									
Tamb	**CC**	**IP**	**EER**	**CC**	**IP**	**EER**	**CC**	**IP**	**EER**
LWC	**7**	**7**	**7**	**14**	**14**	**14**	**18**	**18**	**18**
16	6,85	1,18	5,81	8,80	1,15	7,65	9,11	1,15	7,92
25	9,00	2,35	3,83	10,40	2,48	4,19	9,10	1,58	5,76
35	8,20	3,02	2,72	9,90	3,02	3,28	9,00	2,15	4,19
43	3,80	1,99	1,91	4,70	1,97	2,39	5,35	1,99	2,69

Tamb: Ambient Temperature (°C). LWC: Leaving Water Condenser Temperature (°C). HC: Heating Capacity (kW). CC: Cooling Capacity (kW). IP: Power Input (kW)
This data is measured by Panasonic in accordance with EN14511-2 standard. This data is for reference purpose only, and does not guarantee the performance.

Heating & Cooling capacity tables

Based on outlet temperature and outside temperature.

Aquarea High Performance Bi-bloc H Generation Single Phase. Heating and Cooling • R410A refrigerant

WH-UD03HE5-1

Tamb	HC	IP	COP	HC	IP	COP	HC	IP	COP	HC	IP	COP	HC	IP	COP	HC	IP	COP
LWC	30	30	30	35	35	35	40	40	40	45	45	45	50	50	50	55	55	55
-15	3,20	1,26	2,54	3,20	1,39	2,30	3,10	1,52	2,04	3,00	1,64	1,83	2,80	1,78	1,57	2,75	1,92	1,43
-7	3,20	1,08	2,96	3,20	1,19	2,69	3,20	1,34	2,39	3,20	1,48	2,16	3,20	1,67	1,92	3,20	1,86	1,72
2	3,20	0,82	3,90	3,20	0,90	3,56	3,20	1,03	3,11	3,20	1,16	2,76	3,20	1,33	2,41	3,20	1,49	2,15
7	3,20	0,58	5,52	3,20	0,64	5,00	3,20	0,77	4,16	3,20	0,89	3,60	3,20	1,05	3,05	3,20	1,20	2,67
16	3,20	0,50	6,40	3,20	0,55	5,82	3,20	0,64	5,00	3,20	0,72	4,44	3,20	0,86	3,72	3,20	0,99	3,23
25	3,20	0,42	7,62	3,20	0,46	6,96	3,20	0,55	5,82	3,20	0,63	5,08	3,20	0,73	4,38	3,20	0,82	3,90

WH-UD05HE5-1

Tamb	HC	IP	COP	HC	IP	COP	HC	IP	COP	HC	IP	COP	HC	IP	COP	HC	IP	COP
LWC	30	30	30	35	35	35	40	40	40	45	45	45	50	50	50	55	55	55
-15	4,20	1,75	2,40	4,20	1,94	2,16	3,80	1,96	1,94	3,40	1,98	1,72	3,20	2,05	1,56	3,00	2,12	1,42
-7	4,20	1,46	2,88	4,20	1,62	2,59	4,00	1,72	2,33	3,80	1,82	2,09	3,70	1,95	1,90	3,55	2,08	1,71
2	4,20	1,22	3,44	4,20	1,35	3,11	4,20	1,50	2,80	4,20	1,65	2,55	4,15	1,86	2,23	4,10	2,07	1,98
7	5,00	0,97	5,15	5,00	1,08	4,63	5,00	1,28	3,91	5,00	1,48	3,38	5,00	1,68	2,98	5,00	1,89	2,65
16	5,00	0,83	6,02	5,00	0,92	5,43	5,00	1,15	4,35	5,00	1,38	3,62	5,00	1,53	3,27	5,00	1,68	2,98
25	5,00	0,74	6,76	5,00	0,82	6,10	5,00	1,02	4,90	5,00	1,22	4,10	5,00	1,35	3,70	5,00	1,49	3,36

WH-UD07HE5-1

Tamb	HC	IP	COP	HC	IP	COP	HC	IP	COP	HC	IP	COP	HC	IP	COP	HC	IP	COP
LWC	30	30	30	35	35	35	40	40	40	45	45	45	50	50	50	55	55	55
-15	—	—	—	4,60	1,98	2,32	4,60	2,19	2,10	4,60	2,40	1,92	4,55	2,63	1,73	4,50	2,86	1,57
-7	—	—	—	5,15	1,92	2,68	5,08	2,14	2,37	5,00	2,36	2,12	4,90	2,45	2,00	4,80	2,54	1,89
2	—	—	—	6,55	1,96	3,34	6,58	2,29	2,87	6,60	2,62	2,52	6,30	2,82	2,23	6,00	3,01	1,99
7	—	—	—	7,00	1,57	4,46	7,00	1,84	3,80	7,00	2,10	3,33	6,90	2,35	2,94	6,80	2,59	2,63
25	—	—	—	7,00	0,97	7,22	6,74	1,14	5,91	6,48	1,31	4,95	6,24	1,43	4,36	6,00	1,55	3,87

WH-UD09HE5-1

Tamb	HC	IP	COP	HC	IP	COP	HC	IP	COP	HC	IP	COP	HC	IP	COP	HC	IP	COP
LWC	30	30	30	35	35	35	40	40	40	45	45	45	50	50	50	55	55	55
-15	—	—	—	5,90	2,66	2,22	5,65	2,82	2,00	5,40	2,98	1,81	5,20	3,08	1,69	5,00	3,18	1,57
-7	—	—	—	5,90	2,34	2,52	5,85	2,61	2,24	5,80	2,88	2,01	5,80	2,98	1,95	5,80	3,08	1,88
2	—	—	—	6,70	2,14	3,13	6,65	2,38	2,79	6,60	2,62	2,52	6,30	2,82	2,23	6,00	3,01	1,99
7	—	—	—	9,00	2,18	4,13	9,00	2,49	3,61	9,00	2,79	3,23	8,95	3,25	2,75	8,90	3,70	2,41
25	—	—	—	9,00	1,26	7,14	8,66	1,48	5,85	8,32	1,69	4,92	8,03	1,85	4,34	7,74	2,01	3,85

WH-UD12HE5

Tamb	HC	IP	COP	HC	IP	COP	HC	IP	COP	HC	IP	COP	HC	IP	COP	HC	IP	COP
LWC	30	30	30	35	35	35	40	40	40	45	45	45	50	50	50	55	55	55
-15	9,30	3,46	2,69	8,90	3,62	2,46	8,50	3,79	2,24	8,10	3,95	2,05	7,50	4,05	1,85	7,00	4,16	1,68
-7	10,40	3,37	3,09	10,00	3,66	2,73	9,60	3,95	2,43	9,20	4,24	2,17	8,70	4,26	2,04	8,20	4,27	1,92
2	11,80	3,10	3,81	11,40	3,31	3,44	11,00	3,53	3,12	10,60	3,74	2,83	9,80	3,94	2,49	9,10	4,14	2,20
7	12,00	2,10	5,71	12,00	2,53	4,74	12,00	2,96	4,05	12,00	3,39	3,54	12,00	3,78	3,17	12,00	4,16	2,88
25	12,00	1,38	8,70	12,00	1,66	7,23	11,80	1,94	6,08	11,70	2,23	5,25	11,50	2,49	4,62	11,40	2,74	4,16

WH-UD16HE5

Tamb	HC	IP	COP	HC	IP	COP	HC	IP	COP	HC	IP	COP	HC	IP	COP	HC	IP	COP
LWC	30	30	30	35	35	35	40	40	40	45	45	45	50	50	50	55	55	55
-15	10,60	4,09	2,59	10,30	4,38	2,35	10,00	4,67	2,14	9,70	4,96	1,96	8,80	4,94	1,78	7,90	4,91	1,61
-7	11,90	4,03	2,95	11,40	4,43	2,57	10,80	4,83	2,24	10,30	5,22	1,97	9,60	5,09	1,89	9,00	4,95	1,82
2	13,50	3,74	3,61	13,00	3,96	3,28	12,40	4,18	2,97	11,90	4,40	2,70	10,80	4,46	2,42	9,80	4,51	2,17
7	16,00	3,21	4,98	16,00	3,74	4,28	16,00	4,27	3,75	16,00	4,80	3,33	15,20	5,11	2,97	14,50	5,41	2,68
25	16,00	2,31	6,93	16,00	2,69	5,95	16,00	3,07	5,21	16,00	3,45	4,64	16,00	3,67	4,36	15,90	3,89	4,09

Tamb: Ambient Temperature (°C). LWC: Leaving Water Condenser Temperature (°C). HC: Heating Capacity (kW). CC: Cooling Capacity (kW). IP: Power Input (kW).
This data is measured by Panasonic in accordance with EN14511-2 standard. This data is for reference purpose only, and does not guarantee the performance.

Aquarea High Performance Bi-bloc H Generation Single Phase. Heating and Cooling • R410A refrigerant

WH-UD03HE5-1									
Tamb	**CC**	**IP**	**EER**	**CC**	**IP**	**EER**	**CC**	**IP**	**EER**
LWC	**7**	**7**	**7**	**14**	**14**	**14**	**18**	**18**	**18**
18	2,40	0,42	5,71	4,40	0,73	6,03	3,70	0,49	7,55
25	3,20	0,73	4,38	4,10	0,86	4,77	3,50	0,59	5,93
35	3,20	1,04	3,08	3,90	1,07	3,64	3,30	0,74	4,46
43	2,90	1,20	2,42	3,50	1,20	2,92	3,00	0,88	3,41
WH-UD05HE5-1									
Tamb	**CC**	**IP**	**EER**	**CC**	**IP**	**EER**	**CC**	**IP**	**EER**
LWC	**7**	**7**	**7**	**14**	**14**	**14**	**18**	**18**	**18**
18	4,50	0,89	5,06	5,00	0,90	5,56	5,70	0,90	6,33
25	5,00	1,43	3,50	6,30	1,50	4,20	5,40	1,06	5,09
35	4,50	1,67	2,69	5,50	1,68	3,27	5,00	1,33	3,76
43	3,30	1,53	2,16	4,10	1,52	2,70	4,40	1,53	2,88
WH-UD07HE5-1									
Tamb	**CC**	**IP**	**EER**	**CC**	**IP**	**EER**	**CC**	**IP**	**EER**
LWC	**7**	**7**	**7**	**14**	**14**	**14**	**18**	**18**	**18**
18	4,80	0,80	6,00	7,20	1,16	6,21	6,00	1,13	5,31
25	7,00	1,90	3,68	8,47	1,78	4,76	6,00	1,27	4,72
35	6,00	2,28	2,63	6,60	2,48	2,66	6,00	1,68	3,57
43	4,85	2,65	1,83	6,00	2,82	2,13	4,80	1,98	2,42
WH-UD09HE5-1									
Tamb	**CC**	**IP**	**EER**	**CC**	**IP**	**EER**	**CC**	**IP**	**EER**
LWC	**7**	**7**	**7**	**14**	**14**	**14**	**18**	**18**	**18**
18	5,40	1,00	5,40	8,40	1,62	5,19	7,00	1,61	4,35
25	7,85	2,40	3,27	10,20	2,46	4,15	7,00	1,77	3,95
35	7,00	2,88	2,43	7,60	3,20	2,38	7,00	2,15	3,26
43	5,20	2,85	1,82	6,99	3,84	1,82	5,60	2,55	2,20
WH-UD12HE5									
Tamb	**CC**	**IP**	**EER**	**CC**	**IP**	**EER**	**CC**	**IP**	**EER**
LWC	**7**	**7**	**7**	**14**	**14**	**14**	**18**	**18**	**18**
16	7,86	1,18	6,66	13,15	1,40	9,39	10,00	1,73	5,78
25	12,08	2,90	4,17	15,70	2,05	7,66	10,00	1,97	5,08
35	10,00	2,56	3,91	12,00	2,67	4,49	10,00	2,40	4,17
43	7,80	3,80	2,05	11,10	3,19	3,48	8,00	2,85	2,81
WH-UD16HE5									
Tamb	**CC**	**IP**	**EER**	**CC**	**IP**	**EER**	**CC**	**IP**	**EER**
LWC	**7**	**7**	**7**	**14**	**14**	**14**	**18**	**18**	**18**
16	9,20	1,62	5,68	16,40	2,58	6,36	12,20	2,45	4,98
25	14,40	3,92	3,67	19,20	3,83	5,01	12,20	2,79	4,37
35	12,20	4,76	2,56	15,00	4,98	3,01	12,20	2,96	4,12
43	7,75	3,40	2,28	13,80	5,95	2,32	9,70	4,00	2,43

Tamb: Ambient Temperature (°C). LWC: Leaving Water Condenser Temperature (°C). HC: Heating Capacity (kW). CC: Cooling Capacity (kW). IP: Power Input (kW).
This data is measured by Panasonic in accordance with EN14511-2 standard. This data is for reference purpose only, and does not guarantee the performance.

Heating & Cooling capacity tables

Based on outlet temperature and outside temperature.

Aquarea High Performance Bi-bloc H Generation Three Phase. Heating and Cooling • R410A refrigerant

WH-UD09HE8																		
Tamb	**HC**	**IP**	**COP**	**HC**	**IP**	**COP**	**HC**	**IP**	**COP**	**HC**	**IP**	**COP**	**HC**	**IP**	**COP**	**HC**	**IP**	**COP**
LWC	**30**	**30**	**30**	**35**	**35**	**35**	**40**	**40**	**40**	**45**	**45**	**45**	**50**	**50**	**50**	**55**	**55**	**55**
-15	8,65	3,06	2,83	8,30	3,21	2,59	7,95	3,41	2,33	7,60	3,61	2,11	7,15	3,71	1,93	6,70	3,81	1,76
-7	9,35	2,91	3,21	9,00	3,16	2,85	8,85	3,54	2,50	8,70	3,92	2,22	8,30	3,89	2,13	7,90	3,86	2,05
2	9,31	2,35	3,96	9,00	2,51	3,59	9,00	2,78	3,24	9,00	3,05	2,95	8,90	3,49	2,55	8,80	3,94	2,23
7	9,00	1,54	5,84	9,00	1,86	4,84	9,00	2,16	4,17	9,00	2,46	3,66	9,00	2,76	3,26	9,00	3,06	2,94
25	9,00	1,05	8,57	9,00	1,24	7,26	8,73	1,44	6,06	8,46	1,64	5,16	8,28	1,82	4,55	8,10	2,00	4,05
WH-UD12HE8																		
Tamb	**HC**	**IP**	**COP**	**HC**	**IP**	**COP**	**HC**	**IP**	**COP**	**HC**	**IP**	**COP**	**HC**	**IP**	**COP**	**HC**	**IP**	**COP**
LWC	**30**	**30**	**30**	**35**	**35**	**35**	**40**	**40**	**40**	**45**	**45**	**45**	**50**	**50**	**50**	**55**	**55**	**55**
-15	9,30	3,46	2,69	8,90	3,62	2,46	8,50	3,79	2,24	8,10	3,95	2,05	7,50	4,05	1,85	7,00	4,16	1,68
-7	10,40	3,37	3,09	10,00	3,66	2,73	9,60	3,95	2,43	9,20	4,24	2,17	8,70	4,26	2,04	8,20	4,27	1,92
2	11,80	3,10	3,81	11,40	3,31	3,44	11,00	3,53	3,12	10,60	3,74	2,83	9,80	3,94	2,49	9,10	4,14	2,20
7	12,00	2,10	5,71	12,00	2,53	4,74	12,00	2,96	4,05	12,00	3,39	3,54	12,00	3,78	3,17	12,00	4,16	2,88
25	12,00	1,38	8,70	12,00	1,66	7,23	11,80	1,94	6,08	11,70	2,23	5,25	11,50	2,49	4,62	11,40	2,74	4,16
WH-UD16HE8																		
Tamb	**HC**	**IP**	**COP**	**HC**	**IP**	**COP**	**HC**	**IP**	**COP**	**HC**	**IP**	**COP**	**HC**	**IP**	**COP**	**HC**	**IP**	**COP**
LWC	**30**	**30**	**30**	**35**	**35**	**35**	**40**	**40**	**40**	**45**	**45**	**45**	**50**	**50**	**50**	**55**	**55**	**55**
-15	10,60	4,09	2,59	10,30	4,38	2,35	10,00	4,67	2,14	9,70	4,96	1,96	8,80	4,94	1,78	7,90	4,91	1,61
-7	11,90	4,03	2,95	11,40	4,43	2,57	10,80	4,83	2,24	10,30	5,22	1,97	9,60	5,09	1,89	9,00	4,95	1,82
2	13,50	3,74	3,61	13,00	3,96	3,28	12,40	4,18	2,97	11,90	4,40	2,70	10,80	4,46	2,42	9,80	4,51	2,17
7	16,00	3,21	4,98	16,00	3,74	4,28	16,00	4,27	3,75	16,00	4,80	3,33	15,20	5,11	2,97	14,50	5,41	2,68
25	16,00	2,31	6,93	16,00	2,69	5,95	16,00	3,07	5,21	16,00	3,45	4,64	16,00	3,67	4,36	15,90	3,89	4,09

Aquarea High Performance Bi-bloc H Generation Three Phase. Heating and Cooling • R410A refrigerant

WH-UD09HE8									
Tamb	**CC**	**IP**	**EER**	**CC**	**IP**	**EER**	**CC**	**IP**	**EER**
LWC	**7**	**7**	**7**	**14**	**14**	**14**	**18**	**18**	**18**
16	7,50	1,15	6,52	9,10	1,20	7,58	7,00	1,13	6,19
25	8,35	1,77	4,72	10,90	1,78	6,12	7,00	1,24	5,65
35	7,00	2,23	3,14	8,30	2,32	3,58	7,00	1,52	4,61
43	5,52	2,54	2,17	7,69	2,77	2,78	5,60	1,80	3,11
WH-UD12HE8									
Tamb	**CC**	**IP**	**EER**	**CC**	**IP**	**EER**	**CC**	**IP**	**EER**
LWC	**7**	**7**	**7**	**14**	**14**	**14**	**18**	**18**	**18**
16	7,86	1,18	6,66	13,15	1,40	9,39	10,00	1,73	5,78
25	12,08	2,90	4,17	15,70	2,05	7,66	10,00	1,97	5,08
35	10,00	2,56	3,91	12,00	2,67	4,49	10,00	2,40	4,17
43	7,80	3,80	2,05	11,10	3,19	3,48	8,00	2,85	2,81
WH-UD16HE8									
Tamb	**CC**	**IP**	**EER**	**CC**	**IP**	**EER**	**CC**	**IP**	**EER**
LWC	**7**	**7**	**7**	**14**	**14**	**14**	**18**	**18**	**18**
16	9,20	1,62	5,68	16,40	2,58	6,36	12,20	2,45	4,98
25	14,40	3,92	3,67	19,20	3,83	5,01	12,20	2,79	4,37
35	12,20	4,76	2,56	15,00	4,98	3,01	12,20	2,96	4,12
43	7,75	3,40	2,28	13,80	5,95	2,32	9,70	4,00	2,43

Tamb: Ambient Temperature (°C). LWC: Leaving Water Condenser Temperature (°C). HC: Heating Capacity (kW). CC: Cooling Capacity (kW). IP: Power Input (kW).
This data is measured by Panasonic in accordance with EN14511-2 standard. This data is for reference purpose only, and does not guarantee the performance.

Aquarea T-CAP Bi-bloc H Generation Single Phase / Three Phase. Heating and Cooling • R410A refrigerant

WH-UX09HE5																		
Tamb	HC	IP	COP	HC	IP	COP	HC	IP	COP	HC	IP	COP	HC	IP	COP	HC	IP	COP
LWC	30	30	30	35	35	35	40	40	40	45	45	45	50	50	50	55	55	55
-15	9,00	3,24	2,78	9,00	3,51	2,56	9,00	3,91	2,30	9,00	4,30	2,09	9,00	4,73	1,90	9,00	5,16	1,74
-7	9,00	2,71	3,32	9,00	3,16	2,85	9,00	3,62	2,49	9,00	4,07	2,21	9,00	4,27	2,11	9,00	4,46	2,02
2	9,00	2,36	3,81	9,00	2,51	3,59	9,00	2,78	3,24	9,00	3,05	2,95	9,00	3,56	2,53	9,00	4,07	2,21
7	9,00	1,64	5,49	9,00	1,86	4,84	9,00	2,16	4,17	9,00	2,46	3,66	9,00	2,76	3,26	9,00	3,06	2,94
25	13,60	1,50	9,07	13,60	1,71	7,95	13,20	1,93	6,84	12,80	2,14	5,98	12,00	2,41	4,98	11,20	2,67	4,19
WH-UX12HE5																		
Tamb	HC	IP	COP	HC	IP	COP	HC	IP	COP	HC	IP	COP	HC	IP	COP	HC	IP	COP
LWC	30	30	30	35	35	35	40	40	40	45	45	45	50	50	50	55	55	55
-15	12,00	4,75	2,53	12,00	4,96	2,42	12,00	5,41	2,22	11,00	5,38	2,04	10,80	5,82	1,86	10,50	6,26	1,68
-7	12,00	3,85	3,12	12,00	4,41	2,72	12,00	4,98	2,41	12,00	5,54	2,17	12,00	5,90	2,03	12,00	6,26	1,92
2	12,00	3,19	3,76	12,00	3,49	3,44	12,00	3,87	3,10	12,00	4,25	2,82	12,00	4,86	2,47	12,00	5,47	2,19
7	12,00	2,18	5,50	12,00	2,53	4,74	12,00	2,96	4,05	12,00	3,39	3,54	12,00	3,78	3,17	12,00	4,16	2,88
25	13,60	1,55	8,77	13,60	1,76	7,73	13,40	2,10	6,38	13,20	2,43	5,43	12,60	2,66	4,74	12,00	2,89	4,15
WH-UX09HE8																		
Tamb	HC	IP	COP	HC	IP	COP	HC	IP	COP	HC	IP	COP	HC	IP	COP	HC	IP	COP
LWC	30	30	30	35	35	35	40	40	40	45	45	45	50	50	50	55	55	55
-15	9,00	3,24	2,78	9,00	3,51	2,56	9,00	3,91	2,30	9,00	4,30	2,09	9,00	4,73	1,90	9,00	5,16	1,74
-7	9,00	2,71	3,32	9,00	3,16	2,85	9,00	3,62	2,49	9,00	4,07	2,21	9,00	4,27	2,11	9,00	4,46	2,02
2	9,00	2,36	3,81	9,00	2,51	3,59	9,00	2,78	3,24	9,00	3,05	2,95	9,00	3,56	2,53	9,00	4,07	2,21
7	9,00	1,64	5,49	9,00	1,86	4,84	9,00	2,16	4,17	9,00	2,46	3,66	9,00	2,76	3,26	9,00	3,06	2,94
25	13,60	1,50	9,07	13,60	1,71	7,95	13,20	1,93	6,84	12,80	2,14	5,98	12,00	2,41	4,98	11,20	2,67	4,19
WH-UX12HE8																		
Tamb	HC	IP	COP	HC	IP	COP	HC	IP	COP	HC	IP	COP	HC	IP	COP	HC	IP	COP
LWC	30	30	30	35	35	35	40	40	40	45	45	45	50	50	50	55	55	55
-15	12,00	4,75	2,53	12,00	4,96	2,42	12,00	5,41	2,22	12,00	5,86	2,05	11,80	6,24	1,89	11,60	6,62	1,75
-7	12,00	3,85	3,12	12,00	4,41	2,72	12,00	4,98	2,41	12,00	5,54	2,17	12,00	5,90	2,03	12,00	6,26	1,92
2	12,00	3,19	3,76	12,00	3,49	3,44	12,00	3,87	3,10	12,00	4,25	2,82	12,00	4,86	2,47	12,00	5,47	2,19
7	12,00	2,18	5,50	12,00	2,53	4,74	12,00	2,96	4,05	12,00	3,39	3,54	12,00	3,78	3,17	12,00	4,16	2,88
25	13,60	1,55	8,77	13,60	1,76	7,73	13,40	2,10	6,38	13,20	2,43	5,43	12,60	2,66	4,74	12,00	2,89	4,15
WH-UX16HE8																		
Tamb	HC	IP	COP	HC	IP	COP	HC	IP	COP	HC	IP	COP	HC	IP	COP	HC	IP	COP
LWC	30	30	30	35	35	35	40	40	40	45	45	45	50	50	50	55	55	55
-15	16,00	6,30	2,54	16,00	6,89	2,32	16,00	7,45	2,15	16,00	8,10	1,98	16,00	8,48	1,89	15,20	8,96	1,70
-7	16,00	5,85	2,74	16,00	6,42	2,49	16,00	7,00	2,29	16,00	7,57	2,11	16,00	8,10	1,98	16,00	8,62	1,86
2	16,00	4,67	3,43	16,00	5,21	3,07	16,00	5,74	2,79	16,00	6,31	2,54	16,00	6,90	2,32	16,00	7,50	2,13
7	16,00	3,35	4,78	16,00	3,74	4,28	16,00	4,30	3,72	16,00	4,80	3,33	16,00	5,43	2,95	16,00	5,91	2,71
16	16,00	2,59	6,18	16,00	3,18	5,03	16,00	3,71	4,31	16,00	4,27	3,75	16,00	4,86	3,29	16,00	5,22	3,07
25	16,00	2,02	7,92	16,00	2,58	6,20	16,00	2,91	5,50	16,00	3,36	4,76	16,00	3,74	4,28	16,00	4,00	4,00

Aquarea T-CAP Bi-bloc H Generation Single Phase / Three Phase. Heating and Cooling • R410A refrigerant

Models				WH-UX09HE5									WH-UX12HE5					
Tamb	CC	IP	EER	CC	IP	EER	CC	IP	EER	CC	IP	EER	CC	IP	EER	CC	IP	EER
LWC	7	7	7	14	14	14	18	18	18	7	7	7	14	14	14	18	18	18
18	7,00	1,36	5,15	8,55	1,41	6,06	7,00	1,00	7,00	10,00	1,75	5,71	13,20	1,96	6,73	10,00	1,40	7,14
25	7,65	1,91	4,01	11,10	1,98	5,61	7,00	1,10	6,36	11,20	2,67	4,19	16,50	3,01	5,48	10,00	1,60	6,25
35	7,00	2,21	3,17	9,23	2,37	3,89	7,00	1,35	5,19	10,00	3,56	2,81	12,55	3,63	3,46	10,00	1,95	5,13
43	6,25	2,66	2,35	8,55	2,71	3,15	5,60	1,60	3,50	8,00	3,35	2,39	10,00	3,46	2,89	8,00	2,30	3,48

Models				WH-UX09HE8					WH-UX12HE8						WH-UX16HE8				
Tamb	CC	IP	EER	CC	IP	EER	CC	IP	EER	CC	IP	EER	CC	IP	EER	CC	IP	EER
LWC	7	7	7	18	18	18	7	7	7	18	18	18	7	7	7	18	18	18
18	7,00	1,36	5,15	—	—	—	7,50	1,41	5,32	—	—	—	8,50	1,70	5,00	10,00	1,70	5,88
25	7,65	1,91	4,01	—	—	—	8,90	2,16	4,12	—	—	—	14,00	4,00	3,50	14,00	2,94	4,76
35	7,00	2,21	3,17	—	—	—	10,00	3,56	2,81	—	—	—	12,20	4,76	2,56	12,20	3,50	3,49
43	6,25	2,66	2,35	—	—	—	8,00	3,01	2,66	—	—	—	7,10	3,31	2,15	9,80	3,31	2,96

Tamb: Ambient Temperature (°C). LWC: Leaving Water Condenser Temperature (°C). HC: Heating Capacity (kW). CC: Cooling Capacity (kW). IP: Power Input (kW).
This data is measured by Panasonic in accordance with EN14511-2 standard. This data is for reference purpose only, and does not guarantee the performance.

Heating & Cooling capacity tables

Based on outlet temperature and outside temperature.

Aquarea T-CAP Bi-bloc H Generation Three Phase. Super Quiet outdoor unit. Heating and Cooling - SQC • R410A refrigerant

WH-UQ09HE8																		
Tamb	**HC**	**IP**	**COP**	**HC**	**IP**	**COP**	**HC**	**IP**	**COP**	**HC**	**IP**	**COP**	**HC**	**IP**	**COP**	**HC**	**IP**	**COP**
LWC	**30**	**30**	**30**	**35**	**35**	**35**	**40**	**40**	**40**	**45**	**45**	**45**	**50**	**50**	**50**	**55**	**55**	**55**
-15	9,00	3,24	2,78	9,00	3,51	2,56	9,00	3,91	2,30	9,00	4,30	2,09	9,00	4,73	1,90	9,00	5,16	1,74
-7	9,00	2,71	3,32	9,00	3,16	2,85	9,00	3,62	2,49	9,00	4,07	2,21	9,00	4,27	2,11	9,00	4,46	2,02
2	9,00	2,36	3,81	9,00	2,51	3,59	9,00	2,78	3,24	9,00	3,05	2,95	9,00	3,56	2,53	9,00	4,07	2,21
7	9,00	1,64	5,49	9,00	1,86	4,84	9,00	2,16	4,17	9,00	2,46	3,66	9,00	2,76	3,26	9,00	3,06	2,94
25	13,60	1,50	9,07	13,60	1,71	7,95	13,20	1,93	6,84	12,80	2,14	5,98	12,00	2,41	4,98	11,20	2,67	4,19
WH-UQ12HE8																		
Tamb	**HC**	**IP**	**COP**	**HC**	**IP**	**COP**	**HC**	**IP**	**COP**	**HC**	**IP**	**COP**	**HC**	**IP**	**COP**	**HC**	**IP**	**COP**
LWC	**30**	**30**	**30**	**35**	**35**	**35**	**40**	**40**	**40**	**45**	**45**	**45**	**50**	**50**	**50**	**55**	**55**	**55**
-15	12,00	4,75	2,53	12,00	4,96	2,42	12,00	5,41	2,22	12,00	5,86	2,05	11,80	6,24	1,89	11,60	6,62	1,75
-7	12,00	3,85	3,12	12,00	4,41	2,72	12,00	4,98	2,41	12,00	5,54	2,17	12,00	5,90	2,03	12,00	6,26	1,92
2	12,00	3,19	3,76	12,00	3,49	3,44	12,00	3,87	3,10	12,00	4,25	2,82	12,00	4,86	2,47	12,00	5,47	2,19
7	12,00	2,18	5,50	12,00	2,53	4,74	12,00	2,96	4,05	12,00	3,39	3,54	12,00	3,78	3,17	12,00	4,16	2,88
25	13,60	1,55	8,77	13,60	1,76	7,73	13,40	2,10	6,38	13,20	2,43	5,43	12,60	2,66	4,74	12,00	2,89	4,15
WH-UQ16HE8																		
Tamb	**HC**	**IP**	**COP**	**HC**	**IP**	**COP**	**HC**	**IP**	**COP**	**HC**	**IP**	**COP**	**HC**	**IP**	**COP**	**HC**	**IP**	**COP**
LWC	**30**	**30**	**30**	**35**	**35**	**35**	**40**	**40**	**40**	**45**	**45**	**45**	**50**	**50**	**50**	**55**	**55**	**55**
-15	16,00	6,30	2,54	16,00	6,89	2,32	16,00	7,45	2,15	16,00	8,10	1,98	16,00	8,48	1,89	15,20	8,96	1,70
-7	16,00	5,85	2,74	16,00	6,42	2,49	16,00	7,00	2,29	16,00	7,57	2,11	16,00	8,10	1,98	16,00	8,62	1,86
2	16,00	4,67	3,43	16,00	5,21	3,07	16,00	5,74	2,79	16,00	6,31	2,54	16,00	6,90	2,32	16,00	7,50	2,13
7	16,00	3,35	4,78	16,00	3,74	4,28	16,00	4,30	3,72	16,00	4,80	3,33	16,00	5,43	2,95	16,00	5,91	2,71
16	16,00	2,59	6,18	16,00	3,18	5,03	16,00	3,71	4,31	16,00	4,27	3,75	16,00	4,86	3,29	16,00	5,22	3,07
25	16,00	2,02	7,92	16,00	2,58	6,20	16,00	2,91	5,50	16,00	3,36	4,76	16,00	3,74	4,28	16,00	4,00	4,00

Aquarea T-CAP Bi-bloc H Generation Three Phase. Super Quiet outdoor unit. Heating and Cooling - SQC • R410A refrigerant

WH-UQ09HE8						
Tamb	**CC**	**IP**	**EER**	**CC**	**IP**	**EER**
LWC	**7**	**7**	**7**	**18**	**18**	**18**
18	7,00	1,36	5,15	—	—	—
25	7,65	1,91	4,01	—	—	—
35	7,00	2,21	3,17	—	—	—
43	6,25	2,66	2,35	—	—	—
WH-UQ12HE8						
Tamb	**CC**	**IP**	**EER**	**CC**	**IP**	**EER**
LWC	**7**	**7**	**7**	**18**	**18**	**18**
18	7,50	1,41	5,32	—	—	—
25	8,90	2,16	4,12	—	—	—
35	10,00	3,56	2,81	—	—	—
43	8,00	3,01	2,66	—	—	—
WH-UQ16HE8						
Tamb	**CC**	**IP**	**EER**	**CC**	**IP**	**EER**
LWC	**7**	**7**	**7**	**18**	**18**	**18**
18	8,50	1,70	5,00	10,00	1,70	5,88
25	14,00	4,00	3,50	14,00	2,94	4,76
35	12,20	4,76	2,56	12,20	3,50	3,49
43	7,10	3,31	2,15	9,80	3,31	2,96

Tamb: Ambient Temperature (°C). LWC: Leaving Water Condenser Temperature (°C). HC: Heating Capacity (kW). CC: Cooling Capacity (kW). IP: Power Input (kW).
This data is measured by Panasonic in accordance with EN14511-2 standard. This data is for reference purpose only, and does not guarantee the performance.

Aquarea High Performance Mono-bloc H Generation Single Phase. Heating and Cooling - MDC • R410A refrigerant

WH-MDC05H3E5																		
Tamb	HC	IP	COP	HC	IP	COP	HC	IP	COP	HC	IP	COP	HC	IP	COP	HC	IP	COP
LWC	30	30	30	35	35	35	40	40	40	45	45	45	50	50	50	55	55	55
-15	5,13	2,02	2,54	5,00	2,20	2,27	4,88	2,39	2,04	4,75	2,57	1,85	4,08	2,29	1,78	3,40	2,00	1,70
-7	4,80	1,49	3,23	4,70	1,65	2,85	4,60	1,82	2,53	4,50	1,98	2,27	4,40	2,13	2,07	4,30	2,28	1,89
2	5,10	1,34	3,81	4,80	1,43	3,36	4,50	1,52	2,96	4,20	1,61	2,61	4,10	1,67	2,46	4,00	1,72	2,33
7	5,00	0,79	6,33	5,00	0,99	5,08	5,00	1,18	4,24	5,00	1,37	3,65	5,00	1,57	3,19	5,00	1,76	2,84
12	4,85	0,77	6,29	4,83	0,89	5,46	4,82	1,00	4,82	4,80	1,12	4,29	4,74	1,25	3,81	4,68	1,37	3,42
WH-MDC07H3E5																		
Tamb	HC	IP	COP	HC	IP	COP	HC	IP	COP	HC	IP	COP	HC	IP	COP	HC	IP	COP
LWC	30	30	30	35	35	35	40	40	40	45	45	45	50	50	50	55	55	55
-15	4,60	1,68	2,75	4,60	1,89	2,43	4,60	2,11	2,19	4,60	2,32	1,98	4,55	2,56	1,78	4,50	2,79	1,61
-7	5,60	1,88	2,99	5,50	2,04	2,70	5,40	2,21	2,45	5,30	2,37	2,24	5,15	2,56	2,01	5,00	2,75	1,82
2	6,65	1,79	3,73	6,60	2,00	3,30	6,55	2,22	2,96	6,50	2,43	2,67	6,40	2,64	2,43	6,30	2,84	2,22
7	7,00	1,33	5,28	7,00	1,55	4,52	7,00	1,78	3,94	7,00	2,00	3,50	7,00	2,24	3,13	7,00	2,47	2,83
12	7,00	1,30	5,38	7,00	1,45	4,83	7,05	1,65	4,27	7,10	1,90	3,74	7,15	2,10	3,40	7,20	2,30	3,13
WH-MDC09H3E5																		
Tamb	HC	IP	COP	HC	IP	COP	HC	IP	COP	HC	IP	COP	HC	IP	COP	HC	IP	COP
LWC	30	30	30	35	35	35	40	40	40	45	45	45	50	50	50	55	55	55
-15	6,10	2,34	2,61	5,90	2,50	2,36	5,70	2,67	2,14	5,50	2,83	1,94	5,25	2,99	1,76	5,00	3,14	1,59
-7	6,55	2,26	2,90	6,40	2,46	2,60	6,25	2,66	2,35	6,10	2,86	2,13	5,95	3,06	1,95	5,80	3,25	1,78
2	6,85	1,92	3,58	6,80	2,14	3,18	6,75	2,37	2,85	6,70	2,59	2,59	6,50	2,78	2,34	6,30	2,96	2,13
7	9,00	1,80	5,01	9,00	2,10	4,29	9,00	2,41	3,74	9,00	2,71	3,32	9,00	3,01	2,99	9,00	3,31	2,72
12	9,10	1,61	5,65	9,00	1,79	5,03	9,00	2,09	4,31	9,10	2,40	3,79	9,20	2,80	3,29	9,30	3,00	3,10
WH-MDC12H6E5																		
Tamb	HC	IP	COP	HC	IP	COP	HC	IP	COP	HC	IP	COP	HC	IP	COP	HC	IP	COP
LWC	30	30	30	35	35	35	40	40	40	45	45	45	50	50	50	55	55	55
-15	9,30	3,46	2,69	8,90	3,62	2,46	8,50	3,79	2,24	8,10	3,95	2,05	—	—	—	7,00	4,10	1,71
-7	10,40	3,37	3,09	10,00	3,66	2,73	9,60	3,95	2,43	9,20	4,24	2,17	—	—	—	8,20	4,21	1,95
2	11,80	3,10	3,81	11,40	3,31	3,44	11,00	3,53	3,12	10,60	3,74	2,83	—	—	—	9,10	4,08	2,23
7	12,00	2,10	5,71	12,00	2,53	4,74	12,00	2,96	4,05	12,00	3,39	3,54	—	—	—	12,00	4,10	2,93
12	12,00	1,38	8,70	12,00	1,66	7,23	11,80	1,94	6,08	11,70	2,23	5,25	—	—	—	11,40	2,74	4,16
WH-MDC16H6E5																		
Tamb	HC	IP	COP	HC	IP	COP	HC	IP	COP	HC	IP	COP	HC	IP	COP	HC	IP	COP
LWC	30	30	30	35	35	35	40	40	40	45	45	45	50	50	50	55	55	55
-15	10,60	4,09	2,59	10,30	4,38	2,35	10,00	4,67	2,14	9,70	4,96	1,96	7,90	4,84	1,63	—	—	—
-7	11,90	4,03	2,95	11,40	4,43	2,57	10,80	4,83	2,24	10,30	5,22	1,97	9,00	4,88	1,84	—	—	—
2	13,50	13,74	0,98	13,00	3,96	3,28	12,40	4,18	2,97	11,90	4,40	2,70	9,80	4,44	2,21	—	—	—
7	16,00	3,21	4,98	16,00	3,74	4,28	16,00	4,27	3,75	16,00	4,80	3,33	14,50	5,33	2,72	—	—	—
12	16,00	2,31	6,93	16,00	2,69	5,95	16,00	3,07	5,21	16,00	3,45	4,64	15,90	3,89	4,09	—	—	—

Tamb: Ambient Temperature (°C). LWC: Leaving Water Condenser Temperature (°C). HC: Heating Capacity (kW). CC: Cooling Capacity (kW). IP: Power Input (kW).
This data is measured by Panasonic in accordance with EN14511-2 standard. This data is for reference purpose only, and does not guarantee the performance.

Heating & Cooling capacity tables

Based on outlet temperature and outside temperature.

Aquarea High Performance Mono-bloc H Generation Single Phase. Heating and Cooling - MDC • R410A refrigerant

WH-MDC05H3E5									
Tamb	CC	IP	EER	CC	IP	EER	CC	IP	EER
LWC	7	7	7	14	14	14	18	18	18
24	5,15	1,06	4,86	6,45	1,05	6,14	5,90	0,73	8,08
35	4,50	1,37	3,28	5,52	1,36	4,06	5,10	1,00	5,10
43	3,74	1,55	2,41	4,65	1,60	2,91	4,25	1,20	3,54
WH-MDC07H3E5									
Tamb	CC	IP	EER	CC	IP	EER	CC	IP	EER
LWC	7	7	7	14	14	14	18	18	18
24	6,85	1,78	3,85	8,15	1,80	4,53	7,10	1,20	5,92
35	6,00	2,16	2,78	5,35	1,53	3,51	6,00	1,55	3,87
43	4,90	2,48	1,98	4,45	1,80	2,47	5,10	1,85	2,76
WH-MDC09H3E5									
Tamb	CC	IP	EER	CC	IP	EER	CC	IP	EER
LWC	7	7	7	14	14	14	18	18	18
24	7,30	1,92	3,80	8,60	1,98	4,34	8,20	1,55	5,29
35	7,00	2,69	2,60	6,40	1,93	3,32	7,00	1,95	3,59
43	5,25	2,84	1,85	5,40	2,25	2,40	6,00	2,30	2,61
WH-MDC12H6E5									
Tamb	CC	IP	EER	CC	IP	EER	CC	IP	EER
LWC	7	7	7	14	14	14	18	18	18
16	7,86	1,18	6,66	13,15	2,05	6,41	10,00	1,73	5,78
25	12,08	2,90	4,17	15,70	3,05	5,15	10,00	1,97	5,08
35	10,00	3,56	2,81	12,00	3,67	3,27	10,00	2,15	4,65
43	7,80	3,80	2,05	11,10	3,19	3,48	8,00	2,85	2,81
WH-MDC16H6E5									
Tamb	CC	IP	EER	CC	IP	EER	CC	IP	EER
LWC	7	7	7	14	14	14	18	18	18
16	9,20	1,62	5,68	16,40	2,58	6,36	12,20	2,45	4,98
25	14,40	3,92	3,67	19,20	3,83	5,01	12,20	2,79	4,37
35	12,20	4,76	2,56	15,00	4,98	3,01	12,20	2,96	4,12
43	7,75	3,40	2,28	13,80	5,95	2,32	9,70	4,00	2,43

Tamb: Ambient Temperature (°C). LWC: Leaving Water Condenser Temperature (°C). HC: Heating Capacity (kW). CC: Cooling Capacity (kW). IP: Power Input (kW).
This data is measured by Panasonic in accordance with EN14511-2 standard. This data is for reference purpose only, and does not guarantee the performance.

Aquarea T-CAP Mono-bloc H Generation Single Phase / Three Phase. Heating and Cooling - MXC • R410A refrigerant

WH-MXC09H3E5 / WH-MXC09H3E8																		
Tamb	HC	IP	COP	HC	IP	COP	HC	IP	COP	HC	IP	COP	HC	IP	COP	HC	IP	COP
LWC	30	30	30	35	35	35	40	40	40	45	45	45	50	50	50	55	55	55
-15	9,00	3,24	2,78	9,00	3,51	2,56	9,00	3,91	2,30	9,00	4,30	2,09	9,00	4,73	1,90	9,00	5,16	1,74
-7	9,00	2,71	3,32	9,00	3,16	2,85	9,00	3,62	2,49	9,00	4,07	2,21	9,00	4,27	2,11	9,00	4,46	2,02
2	9,00	2,36	3,81	9,00	2,51	3,59	9,00	2,78	3,24	9,00	3,05	2,95	9,00	3,56	2,53	9,00	4,07	2,21
7	9,00	1,64	5,49	9,00	1,86	4,84	9,00	2,16	4,17	9,00	2,46	3,66	9,00	2,76	3,26	9,00	3,06	2,94
25	13,60	1,50	9,07	13,60	1,71	7,95	13,20	1,93	6,84	12,80	2,14	5,98	12,00	2,41	4,98	11,20	2,67	4,19
WH-MXC12H6E5																		
Tamb	HC	IP	COP	HC	IP	COP	HC	IP	COP	HC	IP	COP	HC	IP	COP	HC	IP	COP
LWC	30	30	30	35	35	35	40	40	40	45	45	45	50	50	50	55	55	55
-15	12,00	4,75	2,53	12,00	4,96	2,42	12,00	5,41	2,22	11,00	5,38	2,04	10,80	5,82	1,86	10,50	6,26	1,68
-7	12,00	3,85	3,12	12,00	4,41	2,72	12,00	4,98	2,41	12,00	5,54	2,17	12,00	5,90	2,03	12,00	6,26	1,92
2	12,00	3,19	3,76	12,00	3,49	3,44	12,00	3,87	3,10	12,00	4,25	2,82	12,00	4,86	2,47	12,00	5,47	2,19
7	12,00	2,18	5,50	12,00	2,53	4,74	12,00	2,96	4,05	12,00	3,39	3,54	12,00	3,78	3,17	12,00	4,16	2,88
25	13,60	1,55	8,77	13,60	1,76	7,73	13,40	2,10	6,38	13,20	2,43	5,43	12,60	2,66	4,74	12,00	2,89	4,15
WH-MXC12H9E8																		
Tamb	HC	IP	COP	HC	IP	COP	HC	IP	COP	HC	IP	COP	HC	IP	COP	HC	IP	COP
LWC	30	30	30	35	35	35	40	40	40	45	45	45	50	50	50	55	55	55
-15	12,00	4,75	2,53	12,00	4,96	2,42	12,00	5,41	2,22	12,00	5,86	2,05	11,80	6,24	1,89	11,60	6,62	1,75
-7	12,00	3,85	3,12	12,00	4,41	2,72	12,00	4,98	2,41	12,00	5,54	2,17	12,00	5,90	2,03	12,00	6,26	1,92
2	12,00	3,19	3,76	12,00	3,49	3,44	12,00	3,87	3,10	12,00	4,25	2,82	12,00	4,86	2,47	12,00	5,47	2,19
7	12,00	2,18	5,50	12,00	2,53	4,74	12,00	2,96	4,05	12,00	3,39	3,54	12,00	3,78	3,17	12,00	4,16	2,88
25	13,60	1,55	8,77	13,60	1,76	7,73	13,40	2,10	6,38	13,20	2,43	5,43	12,60	2,66	4,74	12,00	2,89	4,15
WH-MXC16H9E8																		
Tamb	HC	IP	COP	HC	IP	COP	HC	IP	COP	HC	IP	COP	HC	IP	COP	HC	IP	COP
LWC	30	30	30	35	35	35	40	40	40	45	45	45	50	50	50	55	55	55
-15	16,00	6,30	2,54	16,00	6,89	2,32	16,00	7,45	2,15	16,00	8,10	1,98	16,00	8,48	1,89	15,20	8,96	1,70
-7	16,00	5,85	2,74	16,00	6,42	2,49	16,00	7,00	2,29	16,00	7,57	2,11	16,00	8,10	1,98	16,00	8,62	1,86
2	16,00	4,67	3,43	16,00	5,21	3,07	16,00	5,74	2,79	16,00	6,31	2,54	16,00	6,90	2,32	16,00	7,50	2,13
7	16,00	3,35	4,78	16,00	3,74	4,28	16,00	4,30	3,72	16,00	4,80	3,33	16,00	5,43	2,95	16,00	5,91	2,71
16	16,00	2,59	6,18	16,00	3,18	5,03	16,00	3,71	4,31	16,00	4,27	3,75	16,00	4,86	3,29	16,00	5,22	3,07
25	16,00	2,02	7,92	16,00	2,58	6,20	16,00	2,91	5,50	16,00	3,36	4,76	16,00	3,74	4,28	16,00	4,00	4,00

Aquarea T-CAP Mono-bloc H Generation Single Phase / Three Phase. Heating and Cooling - MXC • R410A refrigerant

Models	WH-MXC09H3E5									WH-MXC12H6E5								
Tamb	CC	IP	EER	CC	IP	EER	CC	IP	EER	CC	IP	EER	CC	IP	EER	CC	IP	EER
LWC	7	7	7	14	14	14	18	18	18	7	7	7	14	14	14	18	18	18
18	7,00	1,36	5,15	8,55	1,41	6,06	7,00	1,00	7,00	10,00	1,75	5,71	13,20	1,96	6,73	10,00	1,40	7,14
25	7,65	1,91	4,01	11,10	1,98	5,61	7,00	1,10	6,36	11,20	2,67	4,19	16,50	3,01	5,48	10,00	1,60	6,25
35	7,00	2,21	3,17	9,23	2,37	3,89	7,00	1,35	5,19	10,00	3,56	2,81	12,55	3,63	3,46	10,00	1,95	5,13
43	6,25	2,66	2,35	8,55	2,71	3,15	5,60	1,60	3,50	8,00	3,35	2,39	10,00	3,46	2,89	8,00	2,30	3,48
Models	WH-MXC09H3E8						WH-MXC12H9E8						WH-MXC16H9E8					
Tamb	CC	IP	EER	CC	IP	EER	CC	IP	EER	CC	IP	EER	CC	IP	EER	CC	IP	EER
LWC	7	7	7	18	18	18	7	7	7	18	18	18	7	7	7	18	18	18
18	7,00	1,36	5,15	—	—	—	7,50	1,41	5,32	—	—	—	8,50	1,70	5,00	10,00	1,70	5,88
25	7,65	1,91	4,01	—	—	—	8,90	2,16	4,12	—	—	—	14,00	4,00	3,50	14,00	2,94	4,76
35	7,00	2,21	3,17	—	—	—	10,00	3,56	2,81	—	—	—	12,20	4,76	2,56	12,20	3,50	3,49
43	6,25	2,66	2,35	—	—	—	8,00	3,01	2,66	—	—	—	7,10	3,31	2,15	9,80	3,31	2,96

Tamb: Ambient Temperature (°C). LWC: Leaving Water Condenser Temperature (°C). HC: Heating Capacity (kW). CC: Cooling Capacity (kW). IP: Power Input (kW).
This data is measured by Panasonic in accordance with EN14511-2 standard. This data is for reference purpose only, and does not guarantee the performance.

Heating & Cooling capacity tables

Based on outlet temperature and outside temperature.

Aquarea HT Bi-bloc F Generation Single Phase / Three Phase. Heating Only • R407C refrigerant

WH-UH09FE5																								
Tamb	HC	IP	COP	HC	IP	COP	HC	IP	COP	HC	IP	COP	HC	IP	COP	HC	IP	COP	HC	IP	COP	HC	IP	COP
LWC	30	30	30	35	35	35	40	40	40	45	45	45	50	50	50	55	55	55	60	60	60	65	65	65
-15	9,00	3,46	2,60	9,00	3,71	2,43	9,00	4,01	2,24	8,80	4,26	2,07	8,60	4,61	1,87	8,50	4,91	1,73	8,00	5,06	1,58	7,80	5,86	1,33
-7	9,00	3,06	2,94	9,00	3,29	2,74	9,00	3,56	2,53	8,90	3,83	2,32	8,90	4,11	2,17	8,90	4,46	2,00	8,90	4,96	1,79	8,90	5,46	1,63
2	9,00	2,43	3,70	9,00	2,61	3,45	9,00	2,91	3,09	9,00	3,21	2,80	9,00	3,55	2,54	9,00	3,88	2,32	9,00	4,35	2,07	9,00	4,76	1,89
7	9,00	1,82	4,95	9,00	1,94	4,64	9,00	2,21	4,07	9,00	2,46	3,66	9,00	2,76	3,26	9,00	3,06	2,94	9,00	3,46	2,60	9,00	3,96	2,27
16	9,00	1,46	6,16	9,00	1,56	5,77	9,00	1,81	4,97	8,90	2,02	4,41	8,80	2,31	3,81	8,60	2,52	3,41	8,20	2,77	2,96	8,20	3,18	2,58
25	12,00	1,66	7,23	12,00	1,76	6,82	12,00	2,01	5,97	10,80	2,14	5,05	10,60	2,46	4,31	10,20	2,66	3,83	9,80	2,89	3,39	9,60	3,31	2,90
WH-UH12FE5																								
Tamb	HC	IP	COP	HC	IP	COP	HC	IP	COP	HC	IP	COP	HC	IP	COP	HC	IP	COP	HC	IP	COP	HC	IP	COP
LWC	30	30	30	35	35	35	40	40	40	45	45	45	50	50	50	55	55	55	60	60	60	65	65	65
-15	12,00	5,16	2,33	12,00	5,53	2,17	11,00	5,51	2,00	10,60	5,53	1,92	10,30	5,63	1,83	9,70	5,76	1,68	9,00	6,01	1,50	8,00	6,11	1,31
-7	12,00	4,43	2,71	12,00	4,76	2,52	11,50	4,91	2,34	11,20	5,06	2,21	10,80	5,16	2,09	10,10	5,28	1,91	10,00	5,66	1,77	9,60	5,91	1,62
2	12,00	3,42	3,51	12,00	3,68	3,26	11,50	3,86	2,98	11,30	4,14	2,73	11,00	4,51	2,44	10,80	4,86	2,22	10,65	5,31	2,01	10,30	5,59	1,84
7	12,00	2,52	4,76	12,00	2,69	4,46	12,00	3,06	3,92	12,00	3,44	3,49	12,00	3,81	3,15	12,00	4,28	2,80	12,00	4,76	2,52	12,00	5,41	2,22
16	12,00	2,03	5,91	12,00	2,17	5,53	12,00	2,52	4,76	12,00	2,86	4,20	11,50	3,19	3,61	11,50	3,48	3,30	11,00	3,82	2,88	11,00	4,37	2,52
25	12,00	1,66	7,23	12,00	1,76	6,82	12,00	2,01	5,97	11,80	2,41	4,90	11,20	2,64	4,24	10,80	2,86	3,78	10,50	3,11	3,38	10,30	3,62	2,85
WH-UH09FE8																								
Tamb	HC	IP	COP	HC	IP	COP	HC	IP	COP	HC	IP	COP	HC	IP	COP	HC	IP	COP	HC	IP	COP	HC	IP	COP
LWC	30	30	30	35	35	35	40	40	40	45	45	45	50	50	50	55	55	55	60	60	60	65	65	65
-15	9,00	3,46	2,60	9,00	3,71	2,43	9,00	4,01	2,24	8,80	4,26	2,07	8,60	4,61	1,87	8,50	4,91	1,73	8,00	5,06	1,58	7,80	5,86	1,33
-7	9,00	3,06	2,94	9,00	3,29	2,74	9,00	3,56	2,53	8,90	3,83	2,32	8,90	4,11	2,17	8,90	4,46	2,00	8,90	4,96	1,79	8,90	5,46	1,63
2	9,00	2,43	3,70	9,00	2,61	3,45	9,00	2,91	3,09	9,00	3,21	2,80	9,00	3,55	2,54	9,00	3,88	2,32	9,00	4,35	2,07	9,00	4,76	1,89
7	9,00	1,82	4,95	9,00	1,94	4,64	9,00	2,21	4,07	9,00	2,46	3,66	9,00	2,76	3,26	9,00	3,06	2,94	9,00	3,46	2,60	9,00	3,96	2,27
16	9,00	1,46	6,16	9,00	1,56	5,77	9,00	1,81	4,97	8,90	2,02	4,41	8,80	2,31	3,81	8,60	2,52	3,41	8,20	2,77	2,96	8,20	3,18	2,58
25	12,00	1,66	7,23	12,00	1,76	6,82	12,00	2,01	5,97	10,80	2,14	5,05	10,60	2,46	4,31	10,20	2,66	3,83	9,80	2,89	3,39	9,60	3,31	2,90
WH-UH12FE8																								
Tamb	HC	IP	COP	HC	IP	COP	HC	IP	COP	HC	IP	COP	HC	IP	COP	HC	IP	COP	HC	IP	COP	HC	IP	COP
LWC	30	30	30	35	35	35	40	40	40	45	45	45	50	50	50	55	55	55	60	60	60	65	65	65
-15	12,00	5,16	2,33	12,00	5,53	2,17	11,00	5,51	2,00	10,60	5,53	1,92	10,30	5,63	1,83	9,70	5,76	1,68	9,00	6,01	1,50	8,00	6,11	1,31
-7	12,00	4,43	2,71	12,00	4,76	2,52	11,50	4,91	2,34	11,20	5,06	2,21	10,80	5,16	2,09	10,10	5,28	1,91	10,00	5,66	1,77	9,60	5,91	1,62
2	12,00	3,42	3,51	12,00	3,68	3,26	11,50	3,86	2,98	11,30	4,14	2,73	11,00	4,51	2,44	10,80	4,86	2,22	10,65	5,31	2,01	10,30	5,59	1,84
7	12,00	2,52	4,76	12,00	2,69	4,46	12,00	3,06	3,92	12,00	3,44	3,49	12,00	3,81	3,15	12,00	4,28	2,80	12,00	4,76	2,52	12,00	5,41	2,22
16	12,00	2,03	5,91	12,00	2,17	5,53	12,00	2,52	4,76	12,00	2,86	4,20	11,50	3,19	3,61	11,50	3,48	3,30	11,00	3,82	2,88	11,00	4,37	2,52
25	12,00	1,66	7,23	12,00	1,76	6,82	12,00	2,01	5,97	11,80	2,41	4,90	11,20	2,64	4,24	10,80	2,86	3,78	10,50	3,11	3,38	10,30	3,62	2,85

Aquarea HT Mono-bloc G Generation Single Phase. Heating Only - MHF • R407C refrigerant

WH-MHF09G3E5																		
Tamb	HC	IP	COP	HC	IP	COP	HC	IP	COP	HC	IP	COP	HC	IP	COP	HC	IP	COP
LWC	30	30	30	35	35	35	40	40	40	45	45	45	50	50	50	55	55	55
-15	9,00	3,46	2,60	9,00	3,71	2,43	9,00	4,01	2,24	8,80	4,26	2,07	8,50	4,71	1,80	7,80	5,38	1,45
-7	9,00	3,06	2,94	9,00	3,29	2,74	9,00	3,56	2,53	8,90	3,83	2,32	8,90	4,28	2,08	9,00	5,02	1,79
2	9,00	2,43	3,70	9,00	2,61	3,45	9,00	2,91	3,09	9,00	3,21	2,80	9,00	3,72	2,42	9,00	4,37	2,06
7	9,00	1,82	4,95	9,00	1,94	4,64	9,00	2,21	4,07	9,00	2,46	3,66	9,00	2,99	3,01	9,00	3,64	2,47
25	9,00	1,52	5,92	9,00	1,70	5,29	9,00	1,88	4,79	9,00	2,16	4,17	9,00	2,63	3,42	9,00	3,20	2,81
WH-MHF12G6E5																		
Tamb	HC	IP	COP	HC	IP	COP	HC	IP	COP	HC	IP	COP	HC	IP	COP	HC	IP	COP
LWC	30	30	30	35	35	35	40	40	40	45	45	45	50	50	50	55	55	55
-15	12,00	5,16	2,33	12,00	5,53	2,17	11,00	5,51	2,00	10,80	5,49	1,97	9,70	5,52	1,76	8,00	5,61	1,43
-7	12,00	4,43	2,71	12,00	4,76	2,52	11,50	4,91	2,34	11,20	5,06	2,21	10,10	5,06	2,00	9,60	5,43	1,77
2	12,00	3,42	3,51	12,00	3,68	3,26	11,50	3,86	2,98	11,30	4,14	2,73	10,80	4,66	2,32	10,30	5,13	2,01
7	12,00	2,52	4,76	12,00	2,69	4,46	12,00	3,06	3,92	12,00	3,44	3,49	12,00	4,10	2,93	12,00	4,97	2,41
25	12,00	2,03	5,91	12,00	2,36	5,08	12,00	2,69	4,46	12,00	3,02	3,97	12,00	3,61	3,32	12,00	4,37	2,75

Tamb: Ambient Temperature (°C). LWC: Leaving Water Condenser Temperature (°C). HC: Heating Capacity (kW). CC: Cooling Capacity (kW). IP: Power Input (kW).
This data is measured by Panasonic in accordance with EN14511-2 standard. This data is for reference purpose only, and does not guarantee the performance.

Examples of installations

Aquarea J and H Generation:
Bivalent with buffer tank and mixing valve

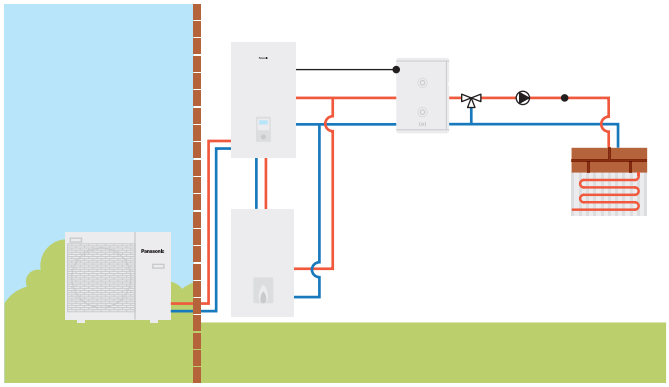

Aquarea J and H Generation:
Buffer tank with solar and mixing valve

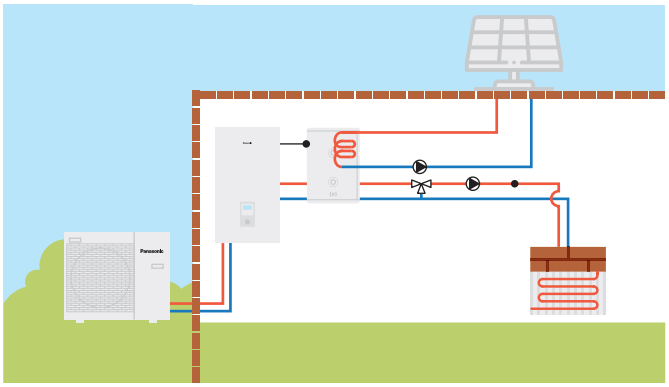

Aquarea J and H Generation:
2 zones with external kit without buffer tank

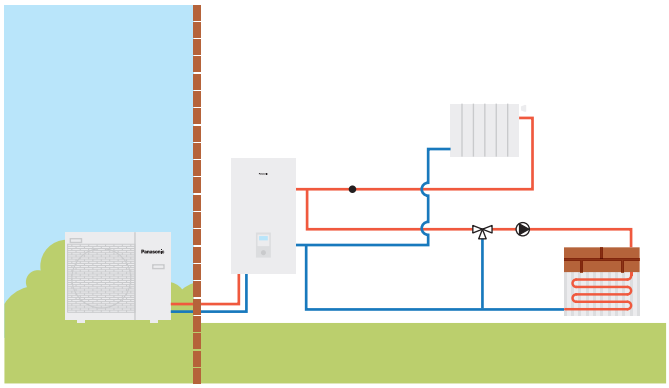

Aquarea J and H Generation:
2 zones with external kit, buffer tank and swimming pool

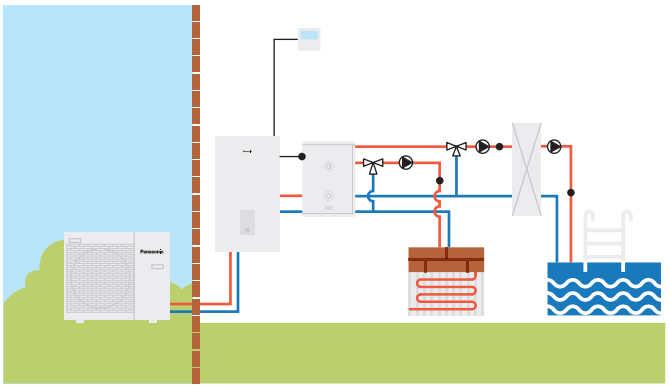

Aquarea All in One J and H Generation:
2 zones with external kit, without buffer tank

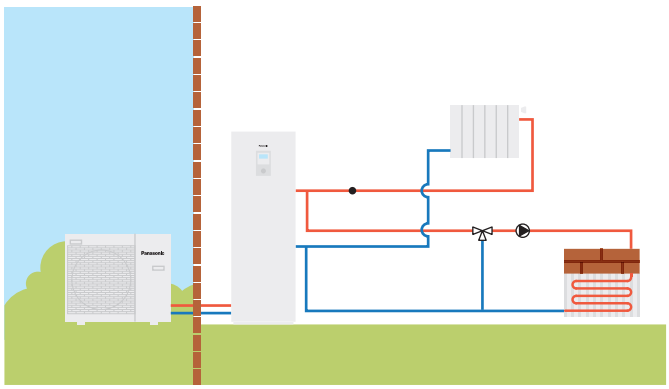

Aquarea All in One 2 zones J and H Generation:
2 zones built-in, without buffer tank

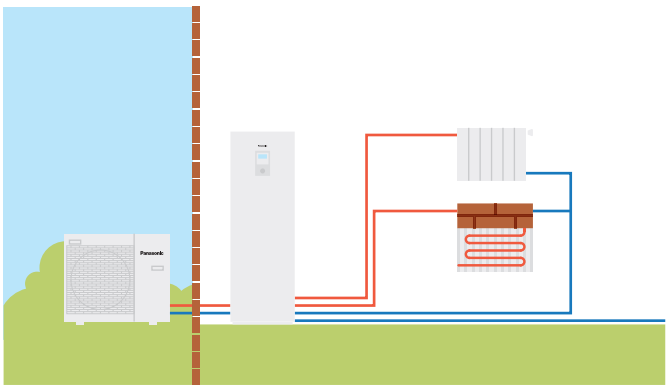

Welcome to the Domestic range

Go green. Go clean. Go your way.
Panasonic Air Conditioners are designed to provide more than just comfort cooling to homes. They save energy. They improve the air quality of your surroundings. They adjust cooling power to suit your living spaces and styles. Living an eco-lifestyle your way is now easier than ever.

Highlighted Features

Panasonic has developed a range of products designed for you, better than ever before.
With its innovative design, high efficiency and advanced nanoe™ X technology for indoor air quality improvement, the Etherea range has been designed with your clients in mind.

Panasonic air conditioners provide more savings and more comfort

We believe that going green shouldn't compromise on comfort.
Our super silent air conditioners guarantee clean indoor air to take care of you and your family. For a cleaner living environment, the nanoe™ X helps improve the quality of the indoor air as well as your surroundings. Together, these breakthrough technologies embody Panasonic's Eco Clean Life Innovation - innovations that improve our environment whilst making life as comfortable as possible.

Energy saving

Refrigerant gas R32.
Our heat pumps containing the refrigerant R32 show a drastic reduction in the value of Global Warming Potential (GWP). An important step to reduce greenhouse gases. R32 is also a component refrigerant, making it easy to recycle.

Exceptional seasonal cooling efficiency based on the ErP regulation.
Higher SEER ratings mean greater efficiency - year-round cooling savings!

Exceptional seasonal heating efficiency based on the ErP regulation.
Higher SCOP ratings mean greater efficiency - year-round heating savings!

Econavi.
Sunlight Sensor technology can detect and reduce the waste of energy by optimising air conditioner operation according to room conditions. With just one touch of a button, you can save energy.

Inverter Plus.
Inverter Plus System classification highlights Panasonic's highest performing systems.

Panasonic R2 rotary compressor.
Designed to withstand extreme conditions, it delivers high performance and efficiency.

High performance and healthy air

nanoe™ X. Quality air for life.
Panasonic's latest innovation nanoe™ X promotes well-being by inhibiting growth of certain harmful viruses and bacteria, as well as deodorising your home.

PM2,5 filter.
Particulate matter (PM2,5) can be found suspended in the air, including dust, dirt, smoke and liquid droplets. This filter can catch PM2,5 particles including hazardous pollutants as well as house dust and pollen.

Dust Collection Filter.
This filter collects and retains particles suspended in the air, resulting in cleaner air in the room.

Super Quiet.
With Super Quiet technology our devices are quieter than a library (30 dB(A)).

Mild dry.
The humidity controls level the air to prevent over-dryness.

More comfort with Aerowings.
Direct airflow to the ceiling, creating a shower cooling effect with built-in twin flap.

Down to -10 °C in cooling mode.
The air conditioner works in cooling mode when the outdoor temperature of -10 °C.

Down to -15 °C in heating mode.
The air conditioner works in heat pump mode when the outdoor temperature is as low as -15 °C.

Summer House.
This innovative function keeps the house at 8/10 or 8/15 °C to avoid freezing pipes during the winter. This function is beneficial for summer or weekend homes.

R410A/R22 renewal.
The Panasonic renewal system allows good quality existing R410A or R22 pipe work to be re-used whilst installing new high efficiency R32 systems.

5 Years compressor warranty.
We guarantee the outdoor unit compressors in the entire range for five years.

High connectivity

Domestic integration to P-Link - CZ-CAPRA1.
Can connect RAC range to P-Link. Full control is now possible.

Internet control.
A next generation system providing user-friendly remote control of air conditioning or heat pump units from everywhere, using a simple Android™ or iOS smartphone, tablet or PC via the internet.

BMS connectivity.
The communication port can be integrated into the indoor unit and provides easy connection to, and control of, your Panasonic heat pump to your home or building management system.

nanoe™ X. Quality air for life

Let Panasonic take care of indoor air quality

nanoe™ X inhibits a wide variety of bacteria, viruses and pollutants, and deodorises the environment. This unique technology is equipped to provide better air quality whether residential or commercial.

7 effects of nanoe™ X – Panasonic unique technology.

Deodorises

Odours

Inhibits 5 types of pollutants

Bacteria and viruses

Mould

Allergens

Pollen

Hazardous substances

Moisturises

Skin and hair

nanoe™ X deodorises and inhibits certain bacteria and viruses

nanoe™ X contains 10 times more OH radicals [1].
nanoe X Generator Mark 1 produces 4,8 trillion OH radicals per second. That is 10 times more OH radicals than the nanoe™.
Greater amounts of OH radicals contained in nanoe™ X lead to outstanding effects in the inhibition of pollutants such as bacteria, viruses and allergens as well as deodorisation. A fresher and cleaner home awaits you.

1) Based on Panasonic Survey.

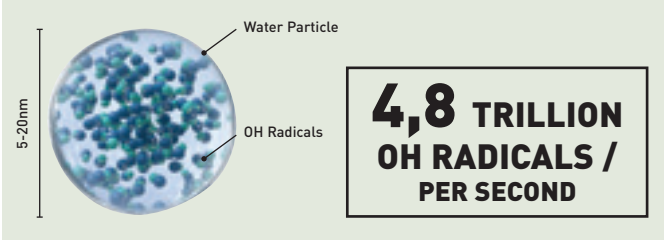

How nanoe™ X keeps air fresh and clean

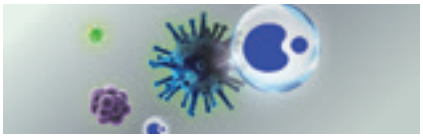

nanoe™ X reaches bacteria.

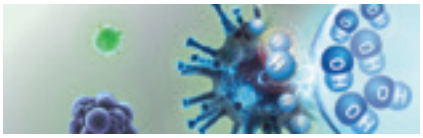

OH radicals take away hydrogen from bacteria, denatured it.

OH radicals transform hydrogen taken away bacteria to water and inhibit bacterial activity.

No matter where you are, air is an essential part in your life. We're working to help every person enjoy better health and comfort with nanoe™ X technologies.

Characteristics of nanoe™ X technology

1. Long Life. 6 times longer lifespan than relative life of negative ions. nanoe™ X contains moisture, around 1000 times more than general negative ion. As it is contained in water particles, it has a longer lifespan and is able to spread over a long distance.

Comparison of distribution in the room.

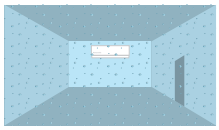

nanoe™ X.
nanoe™ X spreads to every corner of a space.

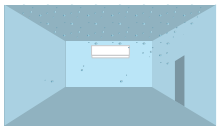

General negative ion.
Ions decay before spreading throughout a room.

2. Water-originated. nanoe™ X comes from condensed moisture in the air so that water replenishment for generation is not required.

nanoe™ X is small enough to penetrate clothing, inhibiting mould and deodorising.

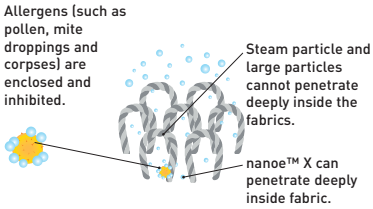

3. Microscopic Scale. With the size of one-billionth of a meter, nanoe™ X is much smaller than steam and can deeply penetrate cloth fabrics to deodorise.

* 1 nm (nanometer) = one billionth of meter.

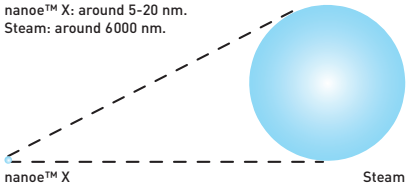

How does nanoe™ X technology help you?

1. Virus / bacteria / pollen INHIBITION. Inhibits certain viruses, with the Influenza virus being 99,9 % inhibited.

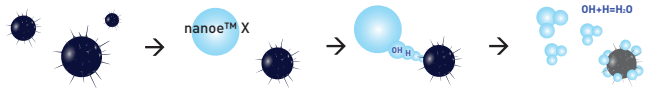

Virus / bacteria / pollen is suspended in indoor air.

nanoe™ X approach and capture those objects.

nanoe™ X denature of virus / bacteria / pollen (remove hydrogen).

Completion inhibition.

The effectiveness of nanoe™ X.

Tested contents			Result	Capacity	Time	Testing organisation	Report No.
Airborne	Virus	Bacteriophage ΦX174	99,7 % inhibited	Approx. 25 m³	6 Hr	Kitasato Research Center for Environmental Science	24_0300_1
	Bacteria	Staphylococcus aureus	99,9 % inhibited	Approx. 25 m³	4 Hr	Kitasato Research Center for Environmental Science	2016_0279
Adhesive	Bacteria	Staphylococcus aureus	99,9 % inhibited	20 m³	8 Hr	Danish Technological Institute	868988
	Pollen	Ambrosia pollen	99,4 % inhibited	20 m³	8 Hr	Danish Technological Institute	868988
	Virus	Bacteriophage ΦX174	99,8 % inhibited	Approx. 25 m³	8 Hr	Japan Food Research Laboratories	13001265005-01
		Influenza (H1N1 subtype)	99,9 % inhibited	1 m³	2 Hr	Kitasato Research Center for Environmental Science	21_0084_1
	Odours	Cigarette smoke odour	Odour intensity reduced by 2,4 levels	Approx. 23 m³	0,2 Hr	Panasonic Product Analysis Center	4AA33-160615-N04
	Pollen	Cedar	97 % inhibited	Approx. 23 m³	8 Hr	Panasonic Product Analysis Center	4AA33-151001-F01

2. Deodorisation. The deodorisation effect helps eliminate any lingering odours, including ones clung to household objects such as sofas and curtains. nanoe™ X can reduce cigarette smoke odour intensity by 2,4 levels in 12 minutes.

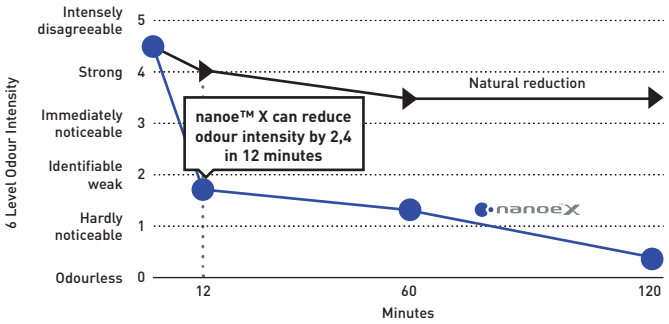

Deodorisation effect for adhering odour (cigarette smoke).
Odour is reduced by 2,4 in only 12 minutes, and almost disappears after 2 hours.
The deodorisation effect will vary subject to the surrounding environment (temperature / humidity), operation time, types of smell and clothes.

Testing organisation: Panasonic Product Analysis Center. Testing method: Verified using the six-level odour intensity scale method in an approximately 23 m³ sized test room. Deodorisation method: nanoe™ released. Test substance: Surface-attached cigarette smoke odour. Test result: Odour intensity reduced by 2,4 levels in 12 minutes. (4AA33-160615-N04).

3. Moisturing Skin. Helps retain the moisture of the skin.

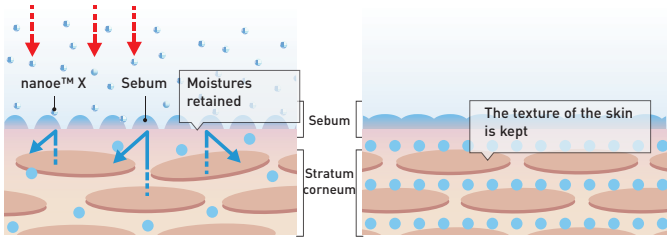

With nanoe™ X.
nanoe™ X hydrates the sebum on the skin to prevent the loss of moisture.

After 28 days
Skin is hydrated and nanoe™ X keeps the texture of the skin.

Test Laboratory: FCG Research Institute Inc. Report no. 19104.

Reliable technology chosen by the world.
The cutting edge technology of Panasonic's nanoe™ technology has been chosen by Lexus to equip its vehicles for clean indoor air.

LEXUS

Etherea stylish and outstanding features

Etherea with nanoe™ X technology: outstanding efficiency A+++, comfort (Super Quiet technology only 19 dB(A)) and healthy air combined in a breakthrough design.

ETHEREA

1 Cleaner air with nanoe™ X

nanoe™ X is an outstanding technology with much higher performance for better indoor air quality.

2 Built-in WLAN and compatible with Voice Assistant

The unit is ready to connect to the internet and to be controlled by smartphone with Panasonic Comfort Cloud App. Control, monitor, and schedule with easy interface.
By connecting Panasonic Comfort Cloud the unit can be managed by the Google Assistant or Amazon Alexa*.

* Amazon, Alexa and all related logos are trademarks of Amazon.com, Inc. or its affiliates Google, Android, Google Play and Google Home are trademarks of Google LLC.

3 Simple yet elegant design

To suit European interiors, the style is simple and clean with an elegant white matt or silver color finish.

4 Stylish infrared control

Enjoy innovative design at your fingertips with the new stylish and sleek Backlit Sky Controller. Bigger screen and easier to use.

Etherea. The ideal solution inside and out

The Etherea has an astonishingly slim design.
A breakthrough design that integrates perfectly with the most modern environments. We have selected the finest materials and processes for a refined design. Available in an elegant metallic or matt silver and matt or gloss white.

Get the best for your health with Etherea and nanoe™ X.
Using nanoe™ X with nano-technology, nano-sized electrostatic atomised water particles clean the air in the room. It works effectively on airborne and adhesive micro-organisms such as certain types of bacteria, viruses and mould thus ensuring a cleaner living environment.

Etherea performance: highest energy class

Economical, environment-friendly operation high SCOP (Seasonal Coefficiency of Performance).
Original Panasonic Inverter technology and a high performance compressor provide top-class operating efficiency. This lets you enjoy lower electricity bills while contributing to environmental protection.

Enjoy innovative design at your fingertips with the new stylish and sleek Backlit Sky Controller

With fast access to key operations and a smooth gliding cover revealing more options, controlling your settings has become simple and intuitive.
With a width of 58,9 mm and a length of 164,7 mm, the Sky Controller fits comfortably in your hand.

Backlit led screen.
The Sky Controller reveals its settings in a better light thanks to the new backlit screen. Now you can adjust your settings without having to switch on the lights.

Distinctive sliding cover.
A smooth sliding cover does not only enhance the remote's clean lines, but also keeps the buttons free from dirt and smudges.

Precise temperature control.
With the Sky Controller's 0,5 °C temperature control, enjoy more precise temperature regulation and experience greater comfort.

Heatcharge. Energy Charge System

Energy class A +++ and offers maximum comfort and energy savings. This powerful air heat pump is designed for commercial and residential climate that places extremely high demands on the heating system.

heatcharge

Heating power and efficiency

- Energy Charge System. Heat storage unit which features non-stop heating and fast heating function
- Higher efficiency and comfort with Econavi sunlight detection and human activity detection
- nanoe™
- More powerful airflow to quickly reach the desired temperature

Panasonic's full line-up of A+++ heat pumps.

In response to the Kyoto Protocol, the European Union set some challenging targets for the reduction in greenhouse-gas emissions. By the year 2020, across the member states, the EU wants to have achieved the following objectives:

- A 20 % cut in greenhouse gas emissions (from 1990 base levels)
- The share of renewables in the energy mix to increase by 20 %
- An overall reduction of 20 % in energy consumption

Powerful, reliable heating even at low ambient winter temperatures

When the air conditioner is operating, the compressor, which is the power source of the unit, generates heat. Until now, this heat was released into the atmosphere. Panasonic has utilised this waste heat!
Heatcharge is a unique, innovative Panasonic technology that stores this waste heat in the compressor and effectively uses it as heating energy. This lets you enjoy a new level of air conditioner heating power and efficiency.

Constant heating.

Using stored heat provides stable heating with less drop in temperature.
Even when heating operation stops during defrost operation, stored heat continues to constantly warm the room. This eliminates the previous discomfort due to the temperature dropping when heating temporarily stops to ensure stable air conditioner heating.

Conventional. The room gradually becomes cold.
Defrost operation: About 11 to 15 min. Fall in room temperature: About 5 to 6 °C.

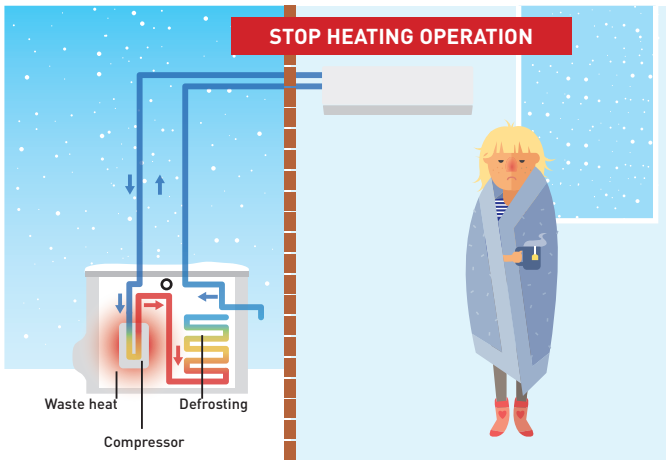

Heatcharge. The room is thoroughly warmed.
Defrost operation: About 5 to 6 min. Fall in room temperature: About 1 to 2 °C.

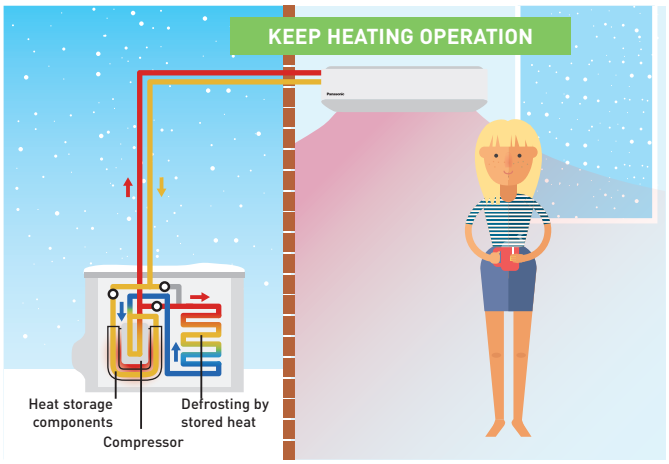

* Defrost operation time and how low room temperature falls differ depending on the environment in which the unit is being used (how insulated and airtight the room is), operation conditions, and temperature conditions.
* Output air temperature falls during defrost operation. How low room temperature falls differs depending on the environment in which the unit is being used (how insulated and airtight the room is), operation conditions, and temperature conditions.
* In environments where a lot of frost accumulates, heating may stop during defrost operation.

Conventional.
During operation, heat is generated inside the compressor.

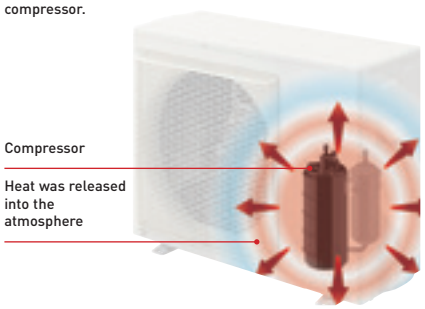

Heatcharge.
Heat generated by the compressor is stored inside and used to warm the refrigerant to efficiently increase heating power.

Heatcharge.
The compressor is wrapped and exhaust heat is used for charging.

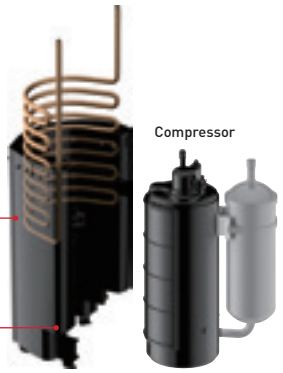

New Wall-mounted TZ super-compact

The perfect air conditioner for the smallest spaces in your home. New TZ with R32 refrigerant powerful and efficient.

1 New super-compact design

The new compact design of the indoor units have a width of just 779 mm. This allows for more installation possibilities, including the limited space above a door. Meticulously designed for both installer and user benefit, installation time of the new TZ has been dramatically decreased.
The inner workings of the unit have also been redesigned to make maintenance quicker and easier. Electronics and wiring components are now on just one side of the unit to simplify maintenance.

2 Built-in WLAN and compatible with Voice Assistant

The unit is ready to connect to the internet and to be controlled by smartphone with Panasonic Comfort Cloud App. Control, monitor, and schedule with easy interface. By connecting Panasonic Comfort Cloud the unit can be managed by the Google Assistant or Amazon Alexa*.

* Amazon, Alexa and all related logos are trademarks of Amazon.com, Inc. or its affiliates Google, Android, Google Play and Google Home are trademarks of Google LLC.

3 PM2,5

Particulate matter (PM2,5) can be found suspended in the air, including dust, dirt, smoke and liquid droplets. The filter can catch PM2,5 particles including hazardous pollutants as well as house dust and pollen and is able to maintain the air quality of the room.

4 Stylish infrared control

Enjoy innovative design at your fingertips with the new stylish and sleek Backlit Sky Controller. Bigger screen and easier to use.

Silent ambient and relaxing atmosphere 20 dB(A)

We have succeeded in making one of the most silent air conditioners on the market. Panasonic Inverter air conditioner's indoor operating noise has been reduced as the Inverter constantly varies its output power to enable more precise temperature control.

* 2,5 and 3,5 kW models: In the Quiet Mode during cooling operation with low fan speed.

Aerowings

Panasonic's Aerowings feature incorporates two independent blades that concentrate airflow to cool you down in the shortest time possible. This also helps distribute cool air evenly throughout the room.

Superior airflow control.
Aerowings features two independent blades that give you more control over the direction of the airflow. Without Aerowings, with direct airflow, the target never changes, so you can easily begin to feel too cold as you are subjected to the continuous icy blast.

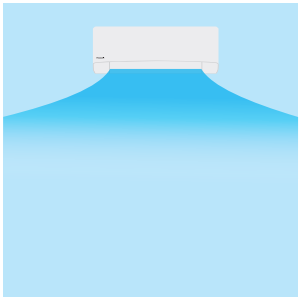

Comfort that goes on and on with Shower Cooling.
When the Aerowings twin blades direct air towards the ceiling they create the Shower Cooling effect.

Panasonic Air Conditioners with Aerowings feature an indoor design with wider intake grille and super-high fan speed to produce bigger air volume.

For Shower Cooling.
This ensures cool air is evenly distributed throughout the room and you can stay comfortable without experiencing continuous direct cooling.

New, super-compact units, redesigned for simple installation and maintenance

TZ and FZ's chassis have been carefully re-designed for simple, stress-free installation and ongoing maintenance.

1 Simple installation

Thanks to advanced improvements, installation time has been dramatically decreased. The new models have been designed to provide more stability and strength for neat installation, with newly built-in support and convenient access to the drain hose, cabling inserts and larger space for secure installation.

2 Easy maintenance

Meticulously designed for both installer and user benefit, the unit features an easy to remove front grille for convenient access to the interior.
The inner workings of the unit have also been redesigned to make maintenance quicker and easier. Electronics and wiring components are now on just one side of the unit to simplify maintenance.

1. Stronger installation plate.
The new models feature a stronger, solid installation plate that provides more stability and strength. For uneven surfaces, there are 2 additional screws to ensure a neat and secure installation .

Installation plate: Strong and solid.

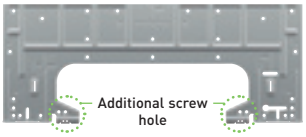

Screw holder for uneven surface (screws not provided).

2. One-piece front grille.
The new model comes with a one-piece front grille design to make servicing easier. First, open the intake grille and remove the screws. Next, slide the three slider locks and remove the front grille.

One-piece front grille: Easy removal.

3. Built-in support holder.
The new model features a built-in support holder, making installation easier and providing convenience and workspace improvements.

Convenient installation and serviceability.

4. Easy access to drain hose & piping connection.
With larger piping space, pipes and insulations are securely and neatly hidden.
With the new visible piping storage, pipes can easily be inspected for leaks without lifting the unit.

Piping storage: 15 % larger.

Bigger working space.

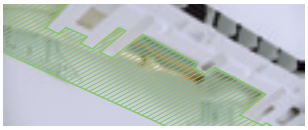

5. Easy wire insertion & tightening.
The new models have combined 2 wire inserts into 1, ensuring front visibility and convenience while inserting wires from the back.

Single tunnel: easy wire insert.

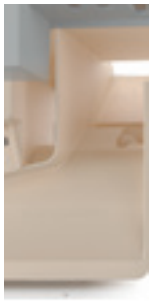

Bigger working space for wiring connection.

6. Easy removal of PCB.
PCB removal is achieved in just 4 easy steps. Simply remove the control board cover, disconnect all connectors from the indicator, disconnect all connectors and pull out the main PCB.

Simple steps for PCB removal.

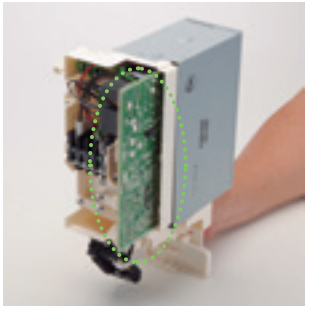

7. Easy / hidden installation of the WLAN adapter.
The latest model features a dedicated space for a network adapter. Easy to plug in, the guided wire slots allow for clear, easy installation and can be neatly tucked away - simple and out of sight!

* Only for models without built-in network adapter.

8. Cross flow fan removal.
The new models are carefully designed to make removal of cross flow fans easier compared to the previous models, saving valuable time.

Bigger diameter Ø100.

Floor Console. Efficient comfort and clean air all year round

The iF Product Design Awards are among the most prestigious awards for product design excellence. Winning the award thanks to its highly intelligent functionality, the Panasonic Floor Console is the ideal air-conditioning system for domestic and commercial applications.

Floor Console with new nanoe™ X technology: outstanding efficiency A++, comfort (Super Quiet technology only 20 dB(A)) and healthy air combined in a breakthrough design.

1 Cleaner air with nanoe™ X

nanoe™ X is an outstanding technology with much higher performance for better indoor air quality.

2 Superquiet operation

When the system reaches its set temperature, the unit will operate at only 20 dB(A). Creating a comfortable home is not only by temperature - a quiet atmosphere is also important.

3 Designed to follow the high European demands

Superquiet operation, highly efficient and technology to help clean the air.

4 Stylish infrared control

Enjoy innovative design at your fingertips with the new stylish and sleek Backlit Sky Controller. Bigger screen and easier to use.

Easy to integrate into your home

A breakthrough design that integrates perfectly with any style. We have carefully selected materials and processes to create an elegant design. Compact in size and with a stylish design, the new Floor Console will easily integrate into your home's interior decoration. There are four options available:

Floor Installation | Wall Installation | Half Concealed | Concealed

The perfect solution for the replacement of old boiler heating systems

Double airflow for improved comfort and temperature dispersion: through the top for an efficient operation

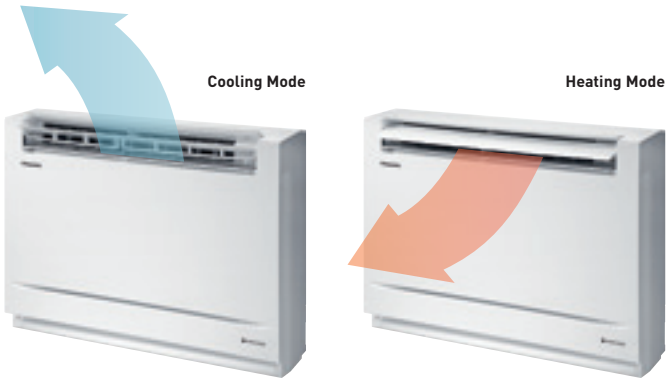

High Energy efficiency class A++

Heat pump brings the outdoor heat energy inside. The new floor console can provide heat inside even when it is -15 °C outside.

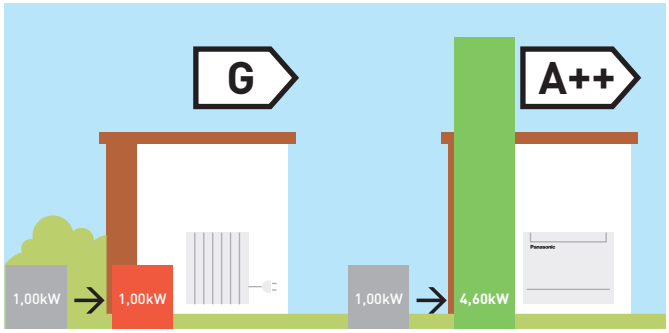

* SCOP on heating mode for Floor Console Type KIT-Z25-UFE and KIT-Z35-UFE compared with electrical heaters at +7 °C.

New design and new infrared control

Panasonic R2 Rotary Compressor

R2 rotary compressors utilize rolling piston technology.
The R2 compressor has been tested in extreme conditions: higher efficiency, single and dual piston, R32 / R410A refrigerant, compact size.

The secret is flexibility. Panasonic Inverter air conditioners have the flexibility to vary the rotation speed of the compressor. This allows it to use less energy to maintain the set temperature while also being able to cool the room quicker at start up.
So you can enjoy better savings on your electricity bills while maintaining cooling comfort.

Making the world a cooler place since 1978

Panasonic Rotary Compressors for Room Air Conditioners have been installed in the most demanding environments around the world. Designed to withstand extreme conditions, Panasonic Rotary delivers high performance, efficiency and reliable service, no matter where you are. Panasonic, the world's largest manufacturer of rotary compressors.

Why is the Panasonic R2 Rotary Compressor so efficient?

1. High efficiency motor. The premium silicon steel motor meets industry efficiency requirements.
2. Improved lubrication of high volume oil pump. The extended, high volume oil pump in conjunction with a larger capacity oil reservoir provides superior lubrication.
3. Accumulator has larger refrigerant capacity. The larger accumulator accomodates generous refrigerant amounts needed in longer line length installations.

R2 Compressor Value

About R2 Compressor.

Built upon 36 years of compressor design and production experience, R2 is the next generation of Rotary Compressors for residential central air conditioning. The technology improvements, enhanced materials and simple design ensure R2 compressors are reliable, efficient and quiet. The R2 Compressor delivers quality, comfort and peace of mind in homes around the world. Panasonic's Rotary Compressors have been life tested in some of the world's most demanding environments and the R2 design is the compressor of choice by contractors and homeowners in these challenging climates. For the high performance that home-owners demand, R2 Rotary Compressors are considered by the industry experts.

Leading Technology.

Used in over 80 % of cooling solutions globally, rotary is the world's dominant residential air conditioning compression technology. Panasonic is the leading rotary and residential AC compressor manufacturer in the world, with over 200 million compressors produced.

Benefits.

Central air conditioning delivered with a Panasonic R2 Rotary Compressor ensures a superior level of comfort at an economical cost.

Inverter technology

Great energy-saving performance. Reduces electricity consumption.

Panasonic Inverter air conditioners are designed to give you exceptional energy savings and performance. At the start up of an air conditioner's operation, a boost in power is required to reach the set temperature. After the set temperature is reached, less power is required to maintain it. The Panasonic Inverter air conditioner varies the rotation speed of the compressor. This provides a highly precise method of maintaining the set temperature.

Constant Comfort.

Precise temperature control with a wide power output range enables an inverter air conditioner to meet different room occupancy levels – thus ensuring constant comfort.

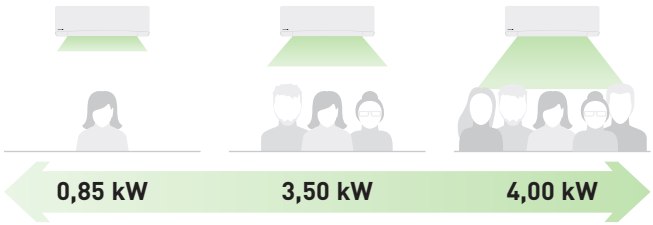

Graph shows the 3,5 kW Inverter model's wide power output range during cooling.

Quick Comfort.

Panasonic Inverter air conditioners can operate with higher power during the start up period to cool the room 1,5 times faster and heat the room 4 times faster than non-Inverter models.

Comparison of cooling speed.

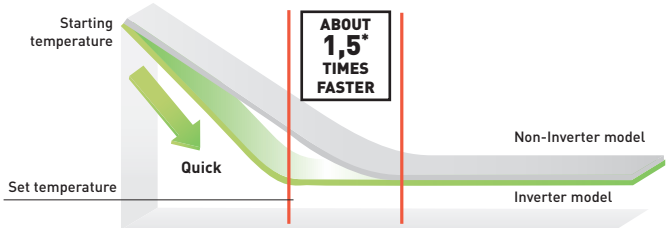

* 3,5 kW Inverter vs. non-Inverter. Outside room temperature: 35 °C; setting temperature: 25 °C.

Comparison of heating speed.

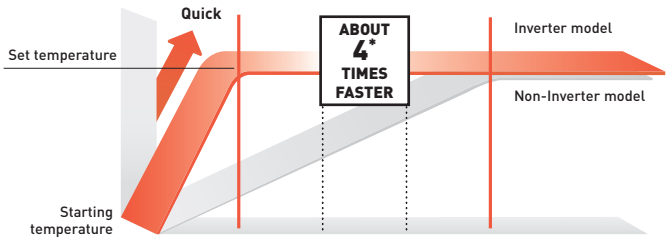

* Comparison of 2,5 kW Inverter and Non-Inverter. Outside room temperature: 2 °C ; Setting temperature: 25 °C.

R22 Renewal. Panasonic standard units can be installed on existing R22 pipings

An important drive to further reduce the potential damage to our ozone

· All Panasonic standard SKE, TKE and UKE units can be installed on existing R22 pipings
· No need for additional accessories (only pipe reductions)
· Approximately 30 % energy savings compared to R22 units

Panasonic is doing its part

We at Panasonic are also doing our part – recognising that all finances are under pressure at the moment. Panasonic has developed a clean and cost effective solution to enable this latest legislation to be introduced with as minimum an effect on businesses and cash reserves as possible.
The Panasonic renewal system allows good quality existing R22 pipe work to be re-used whilst installing new high efficiency R410A / R32 systems.
By bringing a simple solution to the problem Panasonic can renew all Split Systems and PACi systems; and depending upon certain restrictions we don't even limit the manufacturer's equipment we are replacing.
By installing a new high efficiency Panasonic R410A / R32 system you can benefit from around 30 % running cost saving compared to the R22 system.

Yes...
1. Check the capacity of the system you wish to replace
2. Select from the Panasonic range the best system to replace it with
3. Follow the procedure detailed in the brochure and technical data
Simple...

R22 - The reduction of Chlorine critical for a cleaner future.

Guidance on re-using existing R22 piping for a new R410A / R32 installation

1. Precaution.
The existing R22 piping can be re-used for a R410A / R32 system installation if the following conditions are met and the piping are finally verified to be:
· Dry (no moisture remaining in the piping)
· Clean (no dust remaining in the piping)
· Tight (no refrigerant leak at the joining and piping)

2. Conditions.
· Recover the refrigerant and oil.
Operate "force cooling" according to the recommended operation time, regardless of the piping length. Single split: 10 min. Multi Split: 30 min. After that, carry out "pump down" to recover the refrigerant and oil from the existing R22 system

* Note: If pump down operation is not possible due to the malfunction of the system, flush and wash the existing piping to collect back the oil and dirt inside the system.

· Check the oil condition. If the oil contains dirt, wash the existing pipes
· Check the oil colour. After pump down, use a cotton bud to wipe the oil from the existing pipe. If the oil colour is higher than ASTM3, use a new pipe as re-use of old piping is not allowed
· Check pipe thickness. Make sure that the pipe thickness is more than 0,8 mm. If the thickness is less than 0,8 mm, use a new pipe
· Rework the flare for R410A / R32 connection. Do not reuse the old flare nuts
Make sure to use the new flare nuts attached to the R410A / R32 system.

Deterioration Criteria for Refrigerant Oil

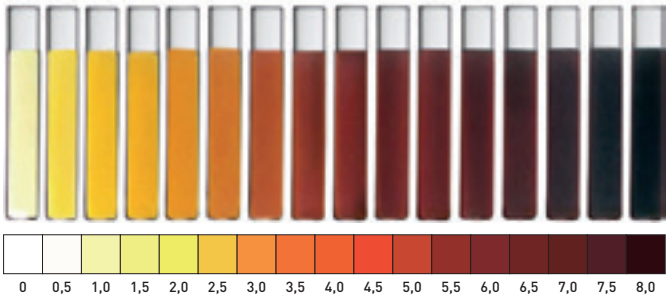

* Note: If the existing piping size is 1/4" (6,35 mm) and 1/2" (12,7 mm), and the new R410A / R32 system is 1/4" (6,35 mm) and 3/8" (9,52 mm), use a pipe reducer connected at indoor and outdoor unit.

3. Applicable Model.
Panasonic single split room air conditioner from CS/CU-RE/UE/YE/XE/CE/NE/E*NKE and PKE series onwards.
Panasonic multi split room air conditioner from CU-2E/3E/4E/5PBE series onwards.

		Liquid	1/4 (6,35)		
		Gas	3/8 (9,52)	1/2 (12,70)	5/8 (15,88)
Split	16 / 20 / 25 / 35	1,6 - 3,5 kW	✔	▲	✖
	42 / 50 / 60	4,2 - 6,0 kW	✖	✔	▲
	71	6,8 - 7,5 kW	✖	✖	✔

✔ Standard piping connection with current piping length and refrigerant charge rules.
▲ This combinations is allowed respecting maximum piping length and refrigerant charged declared in model installed as new.
✖ This combinations is not allowed as it is out of piping diameter.

Panasonic Comfort Cloud App. Convenient centralised control

Advanced smartphone control for domestic range.

Control air to air heat pump operation with Panasonic Comfort Cloud plus additional functions only available through the Cloud from wherever and whenever. One user can manage up to 200 units and also set up different user rights. Also, energy monitoring is possible allowing opportunity to learn how to reduce the operating cost even more.

1 Smart Control

In control of cooling comfort anytime, anywhere.

Connect & control operation.
- 20 units per location and up to 10 different locations
- Transform multiple remote controls into one device

Manage multiple units at once.
- Turn on all AC units at the same time or by group settings
- Set weekly timers for multiple units to cater to your daily routines

2 Smart Comfort

Easily manage your comfort and air quality.

Adjust set temperature.
Set temperature by monitoring real time indoor and outdoor temperatures.

Pre-heat or cool.
Control your house or office comfort before you arrive!

nanoe™ X [1].
Activate nanoe™ X, the advanced technology to deodorise and create healthier environment.

3 Smart Efficiency

More comfort with less wasted energy.

Energy usage analysis [2].
Monitor energy consumption based on different temperature settings.

Energy usage comparison (day/week/month/year).
Compare energy usage history of AC units for better budget planning.

4 Smart Assist

Be informed of breakdowns.

Error codes notification and identification [3].
Launch the App to check error codes for effortless troubleshooting. Help technicians to easily identify the issues.

User's control right.
Register multiple users. Set administrator rights and assign users access.

1) nanoe™ X is available in certain series. 2) Estimated energy consumption data accuracy depends on power supply quantity. 3) Contact trained technicians to perform any repairing/service.

Easily control and access all features of remote control anytime, anywhere.

New possibilities, new applications

Families: Different users can be set up, such as each child can manage their own room. In second homes, rooms can be remotely pre-cooled or pre-warmed, or turned off if needed.

Multi tenant owner: The ability to manage up to 200 units with just one smartphone. It allows for quick and efficient maintenance through remote error codes and the knowledge of consumption.

Small and medium sized offices: Owner can control different rooms of the office easily and give unit by unit access to their staff. Also provides information to know where energy might be wasted for heating and cooling and promoting best comfort practices.

Smart control at your fingertips

With Panasonic Comfort Cloud, the user can manage all functions of the heat pump such as nanoe™ X, air flow direction, speed, temperature setting, mode, plus more.

Scalability and users management

Easy to include additional units and locations, as well as the ability to include several users with different access rights. This creates more possibilities to manage the family home, a second house and also provides opportunities for small/medium sized offices or multi-tenant properties.

Energy monitor and statistics

Knowing the energy each unit uses when operating is key to see opportunities to reduce the energy bill. Panasonic Comfort Cloud stores the energy consumption* of each unit, which can then be shown in easy and powerful statistics graphs. This function is available from WKE, VKE, TKE and UKE generation.
With the weekly timer the operation can be adjusted to optimize the usage of the energy.

*Estimated energy consumption data accuracy depends on power supply quality.

Connection Diagram to Panasonic Comfort Cloud

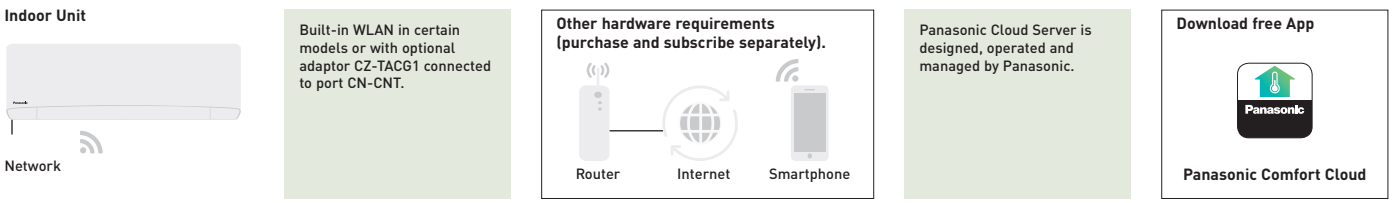

Compatibility: Most Panasonic Domestic range are compatible with CZ-TACG1 WLAN accessory: CS-VZ**SKE, CS-XZ**VKEW, CS-Z**VKEW, CS-TZ**TKEW, CS-RZ**VKEW, CS-FZ**UKE, CS-FZ**WKE, CS-DZ**VKE, CS-Z**TKEA, CS-Z**UFEAW, CS-Z**UB4EAW, CS-Z**UD3EAW, CS-XE**SKEW, CS-E**SKEM-M, CS-TE**TKEW, CS-FE**UKE, CS-BE**TKE, CS-DE**TKE, CS-E**PKEA, CS-E**PB4EA, CS-E**PD3EA. For built-in WLAN such as CS-Z**VKEW, CS-MZ16VKE, CS-XZ**VKEW and CS-TZ***WKEW it is not required the accessory CZ-TACG1.
Remark: indoor temperature display and some special functions are not available through the App for all models. Languages: Available in 19 European languages: Bulgarian, Croatian, Czech, Danish, Deutsch, English, Estonian, Finnish, French, Greek, Hungarian, Italian, Norwegian, Polish, Portuguese, Slovenian, Spanish, Swedish and Turkish.

New Voice Control.
Words do more than actions

Operate the air with your voice

Enjoy the convenience of accessing these four basic operations with just your voice.

1 Turn on/off air conditioner

Convenient control for blissful rest.
Turn on/off AC with ease when preparing a comfortable space for your little ones.

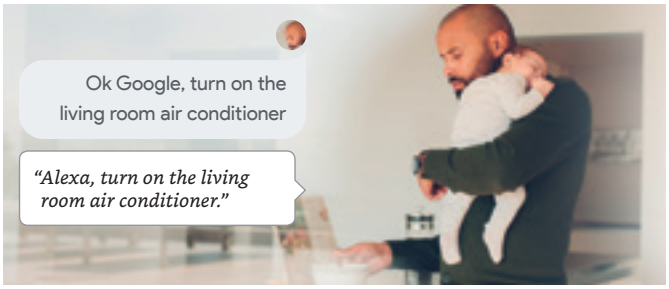

2 Change mode

Extra help when you have a hectic day.
Conveniently change your AC operation mode to cool / heat / auto when your hands are full.

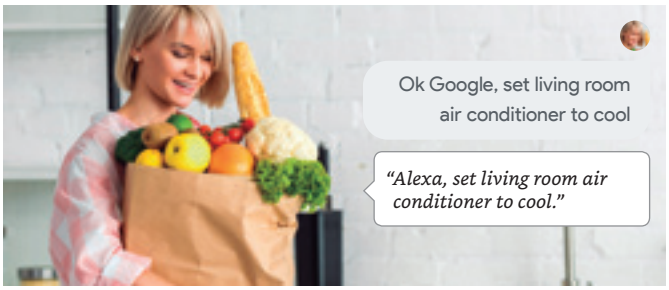

3 Adjust temperature

Easy control for uninterrupted quality time.
Adjust AC temperature to your comfort with a simple voice command.

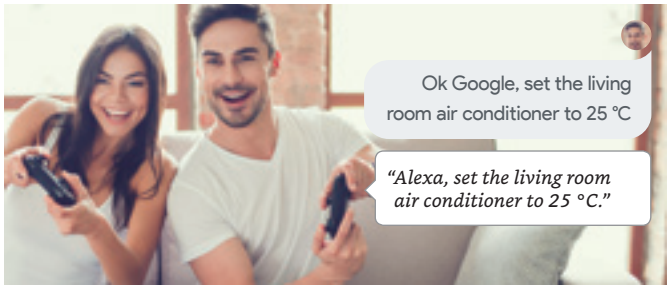

4 Check current status

Hands-free comfort for the whole family.
Easy access for the elderly to check current AC operation status and adjust AC settings.

Control without boundaries and get hands-free help to fully access the features of your air conditioners. Maximising your cooling comfort is now a breeze with our Network-Enabled air conditioners with Panasonic Comfort Cloud and Voice Control.

Get multiple things done with your voice

Simplify your day with your personalised routine by grouping individual actions.

Schedule your routine with your voice.

With the routine function, you can customise voice commands and control multiple voice-controlled devices including our network-enabled air conditioners to help you with your personalised routine.

"Ok Google, Good morning"

"Ok Google, Good night"

Find out more: [Google] https://support.google.com/googlehome/answer/7029585?co=GENIE.Platform%3DAndroid&hl=en&oco=0
[Amazon] https://www.techhive.com/article/3327501/how-to-use-alexa-routines.html

Voice Control with Network-Enabled air conditioners

Functions		When you are home		When away from home
		Remote Control	Voice Control	Comfort Cloud App
Smart control	Power ON/OFF	✔	✔	✔
	Control multiple AC units in 1 location	–	–	✔
	Control multiple units in multiple locations	–	–	✔
	Set up and manage routines	–	✔	–
Smart comfort	Cooling mode	✔	✔	✔
	Heating mode	✔	✔	✔
	Auto mode	✔	✔	✔
	nanoe™ X mode	✔	–	✔
	Pre-cool	–	–	✔
	Change temperature	✔	✔	✔
Smart efficiency	Analyse energy usage patterns	–	–	✔
	Compare historical usage	–	–	✔
Smart assist	Receive error notifications	–	–	✔
	Assign multiple users		✔	✔
	Check power ON/OFF	✔	✔	✔
	Check current mode	✔	✔	✔
	Check temperature settings	✔	✔	✔
	Check room temperature	✔	✔	✔

How to setup

To sync with your Voice Assistant, first the AC unit has to be registered in Panasonic Comfort Cloud.

How to sync Comfort Cloud with the Google Home.

1. Open the Google Home App.
2. Tap "Account".
3. Choose "Set up or add".
4. Choose "Set up device".
5. Choose "Works with Google; Have something already set up?
6. Search for "Comfort Cloud".
7. Insert your "Comfort Cloud" username and password.

How to sync Comfort Cloud with the Amazon Alexa.

1. Open the Amazon Alexa App.
2. Tap "Devices".
3. Choose "Your Smart Home Skills".
4. Choose "Enable Smart Home Skills".
5. Search for "Comfort Cloud".
6. Insert your "Comfort Cloud" username and password.

Compatible device and browsers as of March 2020

1. Android™ 4.4 KitKat® or above
2. iOS 9.0 or above

Please note:
- This is not a definitive list of all compatible devices, other similar devices which use supported Operating Systems should also work either via dedicated Apps. Please note that user experience may vary slightly depending on hardware and software combination
- Google, Android, Google Play and Google Home are trademarks of Google LLC. KitKat is a registered trademark from Nestlé S.A.
- Amazon, Alexa and all related logos are trademarks of Amazon.com, Inc. or its affiliates
- Availability of Voice Assistant services varies depending on country and language
- More information about set up procedures: https://aircon.panasonic.com/connectivity/application.html
- Google Home and Alexa are compatible with the models shown in pages 112, 113.

Control and Connectivity

You can properly manage the air conditioning and perform comprehensive monitoring and control, with all of the features the remote controller provides at home, from anywhere in the world thanks to the internet applications Panasonic has created for you.

CZ-TACG1 Network Adaptor (optional)*

- Optional RAC Network Adaptor
- Compact size for easy installation
- Available for built-in or exposed installation depending on model type.

* Functionality varies depending on models. Please contact your local dealers for compatible models.

Specifications

Input Voltage	DC 12V
Power Consumption	Max. 660 mW
Size (H x W x D)	66 x 36 x 12 mm
Mass	Approx. 85g
Interface	1 x Wireless LAN
Wireless LAN Standard	IEEE 802,11 b/g/n
Frequency Range	2,4GHz band
Encryption	WPA2-PSK (TKIP/AES)

Domestic integration to P-Link - CZ-CAPRA1

Can connect RAC range to P-Link. Full control is now possible.

Integrates any unit in big system control.

- TKEA / PKEA server room integration
- Small offices with domestic indoors
- Tender for refurbishment (old system Domestic and VRF in one installation)

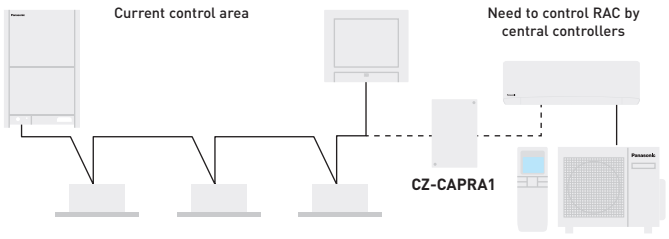

Current system for PACi / VRF. Central controller can connect to P-Link line to control units directly.

RAC units cannot connect directly to P-Link to be managed by Central Controllers.

It's necessary to have interface between P-Link and RAC protocol to cover basic operating items.

Basic operation items: ON/OFF, Mode select, Temperature setting, Fan speed, Flap setting, Remote control prohibit.
External input: ON/OFF control signal, Abnormal stop signal.
External output for Relay [1]**:** Operation status (ON/OFF), Alarm status output.

1) Because current CN-CNT connector can not provide the power for external output relay, additional Input power for external relay is necessary.

Panasonic offers its customers cutting-edge technology, specially designed to ensure our air conditioning systems deliver even higher performance.

Connectivity. Control by BMS

Great flexibility for integration into your KNX, Modbus and BACnet projects allows fully bi-directional monitoring and control of all the functioning parameters.

Reference	KNX PAW-AC-KNX-1i	Modbus® PAW-AC-MBS-1	BACnet™ PAW-AC-BAC-1 [1]
Quick installation and possibility of hidden installation	✔	✔	✔
External power not required	✔	✔	✔
Direct connection to the AC indoor unit	✔ (Split or Multi Split)	✔ (Split or Multi Split)	✔
Control and monitoring of the internal variables of the indoor unit and error codes and indication	✔ Fully compatible	✔ Fully compatible	
Use the AC ambient temperature or the one measured by external sensor	✔	✔	
AC unit can be controlled simultaneously by the remote controller of the AC unit and interface devices	✔	✔	
Advanced control functions	✔	✔	
4 binary inputs. They work as standard interface binary inputs as well as being used to control the AC directly	✔	✔	
Total Control and Supervision. Real states of the AC unit's internal variables			✔

1) This interface allows a complete and natural integration of Panasonic air conditioners into either BACnet IP or MS/TP networks. Is a BTL certified device.

PAW-AC-DIO

Dry contact ON/OFF Interface. Panasonic has developed for hotels applications a dry contact PCB which works with Etherea, RE, UE and YE indoor units in order to control simply the unit centrally.
· ON/OFF signal by 3rd party BMS
· PCB connected to CN-RMT port on indoor unit PCB

Easy connectivity

CN-CNT port easy to access in all new indoor units, without dismanteling the unit to reach the connector. Can easier connect: Wireless accessory / KNX / Modbus / CZ-TACG1 / CZ-CAPRA1 to integrate to PACi control.

Model name	Interface
CZ-TACG1	Panasonic Comfort Cloud for internet control
CZ-CAPRA1	RAC interface adapter for integration into P-Link, plus external input and alarm/status output
PAW-AC-KNX-1i	This interface can be used with all models which have a CN-CNT connector
PAW-AC-MBS-1	This interface can be used with all models which have a CN-CNT connector
PAW-AC-BAC-1	This interface can be used with all models which have a CN-CNT connector

Model name	Interface
PAW-AC-HEAT-1	Heating only PCB for Etherea, 4-Way 60x60 Cassette and Low static pressure hide away
PAW-AC-DIO	This interface can be used with all models which have a CN-RMT connector
PAW-SMSCONTROL	Control of the Etherea, Flagship and Heatcharge by SMS (need additional SIM card)

Domestic Air Conditioner Range R32

Page	Indoor units	2,0 kW	2,5 kW	3,5 kW	4,2 kW	5,0 kW	6,0 kW	7,1 kW
P. 114	Wall-mounted Heatcharge VZ Inverter+ • R32 refrigerant		CS-VZ9SKE CU-VZ9SKE	CS-VZ12SKE CU-VZ12SKE				
P. 115	Wall-mounted Etherea Inverter+ • R32 refrigerant	CS-XZ20VKEW CU-Z20VKE CS-Z20VKEW CU-Z20VKE	CS-XZ25VKEW CU-Z25VKE CS-Z25VKEW CU-Z25VKE	CS-XZ35VKEW CU-Z35VKE CS-Z35VKEW CU-Z35VKE	 CS-Z42VKEW CU-Z42VKE	CS-XZ50VKEW CU-Z50VKE CS-Z50VKEW CU-Z50VKE		 CS-Z71VKEW CU-Z71VKE
P. 116	NEW Wall-mounted TZ super-compact Inverter • R32 refrigerant	CS-TZ20WKEW CU-TZ20WKE	CS-TZ25WKEW CU-TZ25WKE	CS-TZ35WKEW CU-TZ35WKE	CS-TZ42WKEW CU-TZ42WKE	CS-TZ50WKEW CU-TZ50WKE	CS-TZ60WKEW CU-TZ60WKE	CS-TZ71WKEW CU-TZ71WKE
P. 117	NEW Wall-mounted FZ super-compact Inverter • R32 refrigerant		CS-FZ25WKE CU-FZ25WKE	CS-FZ35WKE CU-FZ35WKE		CS-FZ50WKE CU-FZ50WKE	CS-FZ60WKE CU-FZ60WKE	
P. 118	Wall-mounted Professional Inverter -20 °C • R32 refrigerant		CS-Z25TKEA CU-Z25TKEA	CS-Z35TKEA CU-Z35TKEA	CS-Z42TKEA CU-Z42TKEA	CS-Z50TKEA CU-Z50TKEA		CS-Z71TKEA CU-Z71TKEA
P. 119	Floor Console Inverter+ • R32 refrigerant		CS-Z25UFEAW CU-Z25UBEA	CS-Z35UFEAW CU-Z35UBEA		CS-Z50UFEAW CU-Z50UBEA		
P. 120	4 Way 60x60 Cassette Inverter • R32 refrigerant		CS-Z25UB4EAW CU-Z25UBEA	CS-Z35UB4EAW CU-Z35UBEA		CS-Z50UB4EAW CU-Z50UBEA	CS-Z60UB4EAW CU-Z60UBEA	
P. 121	Low Static Pressure Hide Away Inverter • R32 refrigerant 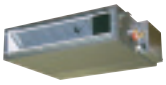		CS-Z25UD3EAW CU-Z25UBEA	CS-Z35UD3EAW CU-Z35UBEA		CS-Z50UD3EAW CU-Z50UBEA	CS-Z60UD3EAW CU-Z60UBEA	

Page	Free Multi Indoors	1,6 kW	2,0 kW	2,5 kW	3,5 kW	4,2 kW	5,0 kW	6,0 kW	7,1 kW
P. 124	Wall-mounted Etherea Inverter+		CS-XZ20VKEW	CS-XZ25VKEW	CS-XZ35VKEW		CS-XZ50VKEW		
		CS-MZ16VKE	CS-Z20VKEW	CS-Z25VKEW	CS-Z35VKEW	CS-Z42VKEW	CS-Z50VKEW		CS-Z71VKEW
P. 124	NEW Wall-mounted TZ super-compact Inverter	CS-MTZ16WKE	CS-TZ20WKEW	CS-TZ25WKEW	CS-TZ35WKEW	CS-TZ42WKEW	CS-TZ50WKEW	CS-TZ60WKEW	CS-TZ71WKEW
P. 124	Floor Console Inverter+	CS-MZ20UFEA		CS-Z25UFEAW	CS-Z35UFEAW		CS-Z50UFEAW		
P. 124	4 Way 60x60 Cassette Inverter	CS-MZ20UB4EA		CS-Z25UB4EAW	CS-Z35UB4EAW		CS-Z50UB4EAW	CS-Z60UB4EAW	
P. 124	Low Static Pressure Hide Away Inverter 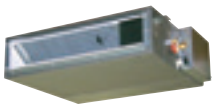	CS-MZ20UD3EA		CS-Z25UD3EAW	CS-Z35UD3EAW		CS-Z50UD3EAW	CS-Z60UD3EAW	

Page	Free Multi Outdoors	3,2 ~ 6,0 kW	3,2 ~ 6,0 kW	3,2 ~ 7,7 kW	4,5 ~ 9,5 kW	4,5 ~ 11,2 kW	4,5 ~ 11,5 kW	4,5 ~ 14,7 kW	4,5 ~ 18,3 kW
P. 124	Outdoor unit Free Multi System Z • R32 refrigerant	CU-2Z35TBE	CU-2Z41TBE	CU-2Z50TBE	CU-3Z52TBE	CU-3Z68TBE	CU-4Z68TBE	CU-4Z80TBE	CU-5Z90TBE

Wall-mounted Heatcharge VZ Inverter+ • R32 refrigerant

heatcharge

Technical focus

- Energy Charge System. Heat storage unit which utilizes non-stop heating and fast heating function
- Econavi Sunlight Detection sensor: Even higher efficiency and great comfort
- nanoe™ with nano-technology, nano-sized electrostatic atomised water particles clean the air in the room
- Super Quiet! Only 18 dB(A), equivalent to night-time in the countryside
- Performance tested at -35 °C Outdoor temperature
- More powerful airflow to quickly reach the desired temperature

CZ-TACG1
Optional WLAN Panasonic Comfort Cloud for internet control.

Kit			KIT-VZ9-SKE	KIT-VZ12-SKE
Cooling capacity	Nominal (Min - Max)	kW	2,50 (0,60 - 3,00)	3,50 (0,60 - 4,00)
SEER [1]			**10,50 A+++**	**10,00 A+++**
Pdesign (cooling)		kW	2,50	3,50
Input power cooling	Nominal (Min - Max)	kW	0,43 (0,14 - 0,61)	0,80 (0,14 - 0,98)
Annual energy consumption [3]		kWh/a	83	122
Heating capacity	Nominal (Min - Max)	kW	3,60 (0,60 - 7,80)	4,20 (0,60 - 9,20)
COP [2]		W/W	5,63	5,04
Heating capacity at -7 °C		kW	5,00	5,60
COP at -7 °C [2]		W/W	2,07	2,00
SCOP [1]			**6,20 A+++**	**5,90 A+++**
Pdesign at -10 °C		kW	3,60	4,20
Input power heating	Nominal (Min - Max)	kW	0,64 (0,14 - 2,72)	0,83 (0,14 - 3,16)
Annual energy consumption [3]		kWh/a	812	995
Indoor unit			**CS-VZ9SKE**	**CS-VZ12SKE**
Power source		V	230	230
Recommended fuse		A	16	16
Connection indoor / outdoor		mm²	4 x 1,5	4 x 1,5
Air volume	Cool / Heat (Hi)	m³/min	12,5 / 15,5	12,9 / 15,9
Sound pressure [4]	Cool (Hi / Lo / Q-Lo)	dB(A)	44 / 27 / 18	45 / 33 / 18
	Heat (Hi / Lo / Q-Lo)	dB(A)	44 / 26 / 18	45 / 29 / 18
Dimension	H x W x D	mm	295 x 798 x 375	295 x 798 x 375
Net weight		kg	14,5	14,5
Outdoor unit			**CU-VZ9SKE**	**CU-VZ12SKE**
Air volume	Cool / Heat (Hi)	m³/min	33,1 / 33,1	35,4 / 33,9
Sound pressure [4]	Cool / Heat (Hi)	dB(A)	49 / 49	50 / 50
Dimension [5]	H x W x D	mm	630 x 799 x 299	630 x 799 x 299
Net weight		kg	39,5	39,5
Piping connections	Liquid pipe	Inch (mm)	1/4 (6,35)	1/4 (6,35)
	Gas pipe	Inch (mm)	3/8 (9,52)	3/8 (9,52)
Pipe length range		m	3 ~ 15	3 ~ 15
Elevation difference (in/out) [6]		m	12	12
Pipe length for additional gas		m	7,5	7,5
Additional gas amount		g/m	20	20
Refrigerant (R32) / CO_2 Eq.		kg / T	1,05 / 0,70875	1,10 / 0,7425
Operating range	Cool Min ~ Max	°C	-10 ~ +43	-10 ~ +43
	Heat Min ~ Max	°C	-30 ~ +24	-30 ~ +24
Lowest outdoor temperature tested by 3rd party laboratory [7]		°C	-35	-35

Accessories	
CZ-TACG1	Panasonic Comfort Cloud for internet control
CZ-CAPRA1	RAC interface adapter for integration into P-Link

Accessories	
PAW-SMSCONTROL	Control by SMS (need additional SIM card)

1) Energy Label Scale from A+++ to D. 2) EER and COP calculation is based in accordance to EN14511. 3) The annual energy consumption is calculated in accordance to EU/626/2011. 4) The sound pressure of the indoor unit shows the value measured of a position 1 m in front of the main body and 0,8 m below the unit. For outdoor unit 1 m in front and 1 m in rear side of main body. The sound pressure is measured in accordance with JIS C 9612. Q-Lo: Quiet mode. Lo: The lowest set fan speed. 5) Add 70 mm for piping port. 6) When installing the outdoor unit at a higher position than the indoor unit. 7) Tested by 3rd party laboratory, SP, according to EN14511:2013 and SP Method 1721, this temperature is not guaranteed by Factory.

SEER and SCOP: For KIT-VZ9-SKE. -35 °C HEATING MODE: Heating performance tested at -35 °C by SP, European third party laboratory. INTERNET CONTROL: Optional.

Wall-mounted Etherea Inverter+ Silver / Pure White Matt • R32 refrigerant

ETHEREA

Silver

Technical focus

- nanoe™ X with nano-technology, nano-sized electrostatic atomised water particles clean the air in the room
- Built-in WLAN Panasonic Comfort Cloud for internet control
- Super Quiet! Only 19 dB(A), equivalent to night-time in the countryside
- Infrared control Sky Controller
- Mild Dry Cooling: prevent a rapid decrease in room humidity
- Aerowings to control air draft direction
- More powerful airflow to quickly reach the desired temperature
- Wired control (Optional)

Built-in WLAN Panasonic Comfort Cloud for internet control.

Kit Silver			**KIT-XZ20-VKE**	**KIT-XZ25-VKE**	**KIT-XZ35-VKE**	—	**KIT-XZ50-VKE**	—
Kit Pure White Matt			**KIT-Z20-VKE**	**KIT-Z25-VKE**	**KIT-Z35-VKE**	**KIT-Z42-VKE**	**KIT-Z50-VKE**	**KIT-Z71-VKE**
Cooling capacity	Nominal (Min - Max)	kW	2,05 (0,75 - 2,40)	2,50 (0,85 - 3,20)	3,50 (0,85 - 4,00)	4,20 (0,85 - 5,00)	5,00 (0,98 - 6,00)	7,10 (0,98 - 8,50)
EER [1]	Nominal (Min - Max)	W/W	4,56 (3,13 - 4,32)	4,81 (3,54 - 4,05)	4,07 (3,54 - 3,70)	3,39 (3,27 - 3,18)	3,55 (3,50 - 3,08)	3,27 (2,33 - 2,93)
SEER [2]			**7,50 A++**	**8,50 A+++**	**8,50 A+++**	**6,90 A++**	**7,90 A++**	**6,50 A++**
Pdesign (cooling)		kW	2,10	2,50	3,50	4,20	5,00	7,10
Input power cooling	Nominal (Min - Max)	kW	0,45 (0,24 - 0,56)	0,52 (0,24 - 0,79)	0,86 (0,24 - 1,08)	1,24 (0,26 - 1,57)	1,41 (0,28 - 1,95)	2,17 (0,42 - 2,90)
Annual energy consumption [3]		kWh/a	98	103	144	213	222	382
Heating capacity	Nominal (Min - Max)	kW	2,80 (0,70 - 4,00)	3,40 (0,80 - 5,00)	4,00 (0,80 - 5,50)	5,30 (0,80 - 6,80)	5,80 (0,98 - 8,00)	8,60 (0,98 - 10,20)
Heating capacity at -7 °C		kW	2,38	2,95	3,20	4,11	4,80	6,31
COP [1]	Nominal (Min - Max)	W/W	4,52 (3,89 - 4,04)	4,79 (4,44 - 3,97)	4,35 (4,44 - 3,72)	3,68 (4,21 - 3,51)	4,03 (2,88 - 3,16)	3,66 (2,45 - 3,46)
SCOP [2]			**4,70 A++**	**5,10 A+++**	**5,10 A+++**	**4,00 A+**	**4,70 A++**	**4,20 A+**
Pdesign at -10 °C		kW	2,10	2,70	2,80	3,60	4,20	5,50
Input power heating	Nominal (Min - Max)	kW	0,62 (0,18 - 0,99)	0,71 (0,18 - 1,26)	0,92 (0,18 - 1,48)	1,44 (0,19 - 1,94)	1,44 (0,34 - 2,53)	2,35 (0,40 - 2,95)
Annual energy consumption [3]		kWh/a	626	741	769	1260	1251	1833
Indoor unit Silver			**CS-XZ20VKEW**	**CS-XZ25VKEW**	**CS-XZ35VKEW**	—	**CS-XZ50VKEW**	—
Indoor unit Pure White Matt			**CS-Z20VKEW**	**CS-Z25VKEW**	**CS-Z35VKEW**	**CS-Z42VKEW**	**CS-Z50VKEW**	**CS-Z71VKEW**
Power source		V	230	230	230	230	230	230
Recommended fuse		A	16	16	16	16	16	20
Connection indoor / outdoor		mm²	4 x 1,5	4 x 1,5	4 x 1,5	4 x 1,5	4 x 2,5	4 x 2,5
Air volume	Cool / Heat	m³/min	9,9 / 10,7	10,2 / 11,2	11,0 / 12,0	11,2 / 12,0	19,1 / 20,5	19,8 / 21,5
Moisture removal volume		L/h	1,3	1,5	2,0	2,4	2,8	4,1
Sound pressure [4]	Cool (Hi / Lo / Q-Lo)	dB(A)	37 / 24 / 19	39 / 25 / 19	42 / 28 / 19	43 / 31 / 25	44 / 37 / 30	47 / 38 / 30
	Heat (Hi / Lo / Q-Lo)	dB(A)	38 / 25 / 19	41 / 27 / 19	43 / 33 / 19	43 / 35 / 29	44 / 37 / 30	47 / 38 / 30
Dimension	H x W x D	mm	295 x 919 x 194	295 x 919 x 194	295 x 919 x 194	295 x 919 x 194	302 x 1120 x 236	302 x 1120 x 236
Net weight		kg	9	10	10	10	12	13
Outdoor unit			**CU-Z20VKE**	**CU-Z25VKE**	**CU-Z35VKE**	**CU-Z42VKE**	**CU-Z50VKE**	**CU-Z71VKE**
Air volume	Cool / Heat	m³/min	26,9 / 24,1	28,7 / 27,2	30,6 / 30,6	31,3 / 30,9	39,8 / 36,9	44,7 / 45,8
Sound pressure [4]	Cool / Heat (Hi)	dB(A)	45 / 46	46 / 47	48 / 50	49 / 51	47 / 47	52 / 54
Dimension [5]	H x W x D	mm	542 x 780 x 289	542 x 780 x 289	542 x 780 x 289	619 x 824 x 299	695 x 875 x 320	695 x 875 x 320
Net weight		kg	27	31	31	31	42	50
Piping connections	Liquid pipe	Inch (mm)	1/4 (6,35)	1/4 (6,35)	1/4 (6,35)	1/4 (6,35)	1/4 (6,35)	1/4 (6,35)
	Gas pipe	Inch (mm)	3/8 (9,52)	3/8 (9,52)	3/8 (9,52)	1/2 (12,70)	1/2 (12,70)	5/8 (15,88)
Pipe length range		m	3 ~ 15	3 ~ 15	3 ~ 15	3 ~ 15	3 ~ 30	3 ~ 30
Elevation difference (in/out) [6]		m	15	15	15	15	15	20
Pipe length for additional gas		m	7,5	7,5	7,5	7,5	7,5	10
Additional gas amount		g/m	10	10	10	10	15	25
Refrigerant (R32) / CO_2 Eq.		kg / T	0,70 / 0,473	0,85 / 0,574	0,85 / 0,574	0,89 / 0,601	1,15 / 0,776	1,37 / 0,925
Operating range	Cool Min ~ Max	°C	-10 ~ +43	-10 ~ +43	-10 ~ +43	-10 ~ +43	-10 ~ +43	-10 ~ +43
	Heat Min ~ Max	°C	-15 ~ +24	-15 ~ +24	-15 ~ +24	-15 ~ +24	-15 ~ +24	-15 ~ +24

Accessories	
CZ-CAPRA1	RAC interface adapter for integration into P-Link

Accessories	
CZ-RD514C	Wired remote controller for Wall-mounted and Floor Console

1) EER and COP calculation is based in accordance to EN14511. 2) Energy Label Scale from A+++ to D. 3) The annual energy consumption is calculated in accordance to EU/626/2011. 4) The sound pressure of the indoor unit shows the value measured of a position 1 m in front of the main body and 0,8 m below the unit. For outdoor unit 1 m in front and 1 m in rear side of main body. The sound pressure is measured in accordance with JIS C 9612. Q-Lo: Quiet mode. Lo: The lowest set fan speed. 5) Add 70 mm for piping port. 6) When installing the outdoor unit at a higher position than the indoor unit.

SEER and SCOP: For KIT-XZ25-VKE, KIT-XZ35-VKE, KIT-Z25-VKE and KIT-Z35-VKE. SUPER QUIET: For KIT-XZ20-VKE, KIT-XZ25-VKE, KIT-XZ35-VKE, KIT-Z20-VKE, KIT-Z25-VKE and KIT-Z35-VKE. INTERNET CONTROL: Built-in WLAN.

Rating Conditions: Cooling Indoor 27°C DB / 19°C WB. Cooling Outdoor 35°C DB / 24°C WB. Heating Indoor 20°C DB. Heating Outdoor 7°C DB / 6°C WB. (DB: Dry Bulb; WB: Wet Bulb).
Specifications subject to change without notice. For detailed information about ErP / Energy Labelling, please visit our websites www.aircon.panasonic.eu or www.ptc.panasonic.eu.

New Wall-mounted TZ Super-compact Inverter • R32 refrigerant

Technical focus

- **NEW** Compact design with 779 mm
- **NEW** Built-in WLAN Panasonic Comfort Cloud for internet control
- **NEW** Infrared control Sky Controller
- PM2,5 Filter to create clean and comfortable indoor air quality
- Super Quiet! Only 20 dB(A)
- Aerowings to control air draft direction
- High energy savings
- This units can be installed on R410A and R22 pipings
- Long connection distance (from 15 m up to 30 m)
- Wired control (Optional)

Built-in WLAN Panasonic Comfort Cloud for internet control.

Kit			KIT-TZ20-WKE	KIT-TZ25-WKE	KIT-TZ35-WKE	KIT-TZ42-WKE	KIT-TZ50-WKE	KIT-TZ60-WKE	KIT-TZ71-WKE
Cooling capacity	Nominal (Min - Max)	kW	2,00 (0,75 - 2,40)	2,50 (0,85 - 3,00)	3,50 (0,85 - 3,90)	4,20 (0,85 - 4,60)	5,00 (0,98 - 5,60)	6,00 (0,98 - 6,60)	7,10 (0,98 - 8,20)
EER [1]	Nominal (Min - Max)	W/W	4,08 (4,17 - 4,00)	3,85 (4,05 - 3,41)	3,57 (3,62 - 3,36)	3,36 (3,62 - 2,80)	3,13 (3,92 - 2,95)	3,24 (3,92 - 2,87)	3,17 (2,33 - 2,98)
SEER [2]			**7,00 A++**	**7,00 A++**	**6,80 A++**	**6,40 A++**	**6,90 A++**	**6,80 A++**	**6,20 A++**
Pdesign (cooling)		kW	2,00	2,50	3,50	4,20	5,00	6,00	7,10
Input power cooling	Nominal (Min - Max)	kW	0,49 (0,18 - 0,60)	0,65 (0,21 - 0,88)	0,98 (0,24 - 1,16)	1,25 (0,24 - 1,64)	1,60 (0,25 - 1,90)	1,85 (0,25 - 2,30)	2,24 (0,42 - 2,75)
Annual energy consumption [3]		kWh/a	100	125	180	230	254	309	401
Heating capacity	Nominal (Min - Max)	kW	2,70 (0,70 - 3,60)	3,30 (0,80 - 4,10)	4,00 (0,80 - 5,10)	5,00 (0,80 - 6,80)	5,80 (0,98 - 7,50)	7,00 (0,98 - 8,20)	8,60 (0,98 - 9,90)
Heating capacity at -7 °C		kW	2,14	2,70	3,30	3,90	4,62	4,90	6,13
COP [1]	Nominal (Min - Max)	W/W	4,15 (4,24 - 3,53)	4,18 (4,21 - 3,66)	4,04 (4,10 - 3,70)	3,73 (4,10 - 3,33)	3,41 (4,67 - 3,26)	3,68 (4,67 - 3,57)	3,51 (2,45 - 3,47)
SCOP [2]			**4,60 A++**	**4,60 A++**	**4,60 A++**	**4,00 A+**	**4,50 A+**	**4,30 A+**	**4,00 A+**
Pdesign at -10 °C		kW	1,90	2,40	2,80	3,60	4,00	4,40	5,50
Input power heating	Nominal (Min - Max)	kW	0,65 (0,17 - 1,02)	0,79 (0,19 - 1,12)	0,99 (0,20 - 1,38)	1,34 (0,20 - 2,04)	1,70 (0,21 - 2,30)	1,90 (0,21 - 2,30)	2,45 (0,40 - 2,85)
Annual energy consumption [3]		kWh/a	578	730	852	1260	1244	1433	1925
Indoor unit			**CS-TZ20WKEW**	**CS-TZ25WKEW**	**CS-TZ35WKEW**	**CS-TZ42WKEW**	**CS-TZ50WKEW**	**CS-TZ60WKEW**	**CS-TZ71WKEW**
Power source		V	230	230	230	230	230	230	230
Recommended fuse		A	16	16	16	16	16	20	20
Connection indoor / outdoor		mm²	4 x 1,5	4 x 1,5	4 x 1,5	4 x 1,5	4 x 2,5	4 x 2,5	4 x 2,5
Air volume	Cool / Heat	m³/min	10,3 / 10,8	11,0 / 11,5	11,8 / 12,3	12,5 / 13,2	12,5 / 13,2	20,9 / 21,9	22,1 / 22,9
Moisture removal volume		L/h	1,3	1,5	2,0	2,4	2,8	3,3	4,1
Sound pressure [4]	Cool (Hi / Lo / Q-Lo)	dB(A)	37 / 25 / 20	40 / 26 / 20	42 / 30 / 20	44 / 31 / 29	44 / 37 / 33	45 / 37 / 34	47 / 38 / 35
	Heat (Hi / Lo / Q-Lo)	dB(A)	38 / 26 / 22	40 / 27 / 22	42 / 33 / 22	44 / 35 / 28	44 / 37 / 33	45 / 37 / 34	47 / 38 / 35
Dimension	H x W x D	mm	290 x 779 x 209	290 x 779 x 209	290 x 779 x 209	290 x 779 x 209	290 x 779 x 209	302 x 1102 x 244	302 x 1102 x 244
Net weight		kg	8	8	8	8	8	13	13
Outdoor unit			**CU-TZ20WKE**	**CU-TZ25WKE**	**CU-TZ35WKE**	**CU-TZ42WKE**	**CU-TZ50WKE**	**CU-TZ60WKE**	**CU-TZ71WKE**
Air volume	Cool / Heat	m³/min	29,7 / 29,7	30,0 / 28,9	28,7 / 29,7	30,4 / 30,8	32,7 / 32,7	34,0 / 34,0	44,7 / 45,9
Sound pressure [4]	Cool / Heat (Hi)	dB(A)	46 / 47	47 / 48	48 / 50	49 / 51	48 / 49	49 / 51	52 / 54
Dimension [5]	H x W x D	mm	542 x 780 x 289	542 x 780 x 289	542 x 780 x 289	542 x 780 x 289	619 x 824 x 299	619 x 824 x 299	695 x 875 x 320
Net weight		kg	24	25	31	31	36	36	50
Piping connections	Liquid pipe	Inch (mm)	1/4 (6,35)	1/4 (6,35)	1/4 (6,35)	1/4 (6,35)	1/4 (6,35)	1/4 (6,35)	1/4 (6,35)
	Gas pipe	Inch (mm)	3/8 (9,52)	3/8 (9,52)	3/8 (9,52)	1/2 (12,7)	1/2 (12,7)	1/2 (12,7)	5/8 (15,88)
Pipe length range		m	3 ~ 15	3 ~ 15	3 ~ 15	3 ~ 15	3 ~ 20	3 ~ 30	3 ~ 30
Elevation difference (in/out) [6]		m	15	15	15	15	15	15	20
Pipe length for additional gas		m	7,5	7,5	7,5	7,5	7,5	10	10
Additional gas amount		g/m	10	10	10	10	15	15	25
Refrigerant (R32) / CO_2 Eq.		kg / T	0,54 / 0,365	0,67 / 0,452	0,77 / 0,520	0,79 / 0,533	1,14 / 0,770	1,22 / 0,824	1,32 / 0,891
Operating range	Cool Min ~ Max	°C	-10 ~ +43	-10 ~ +43	-10 ~ +43	-10 ~ +43	-10 ~ +43	-10 ~ +43	-10 ~ +43
	Heat Min ~ Max	°C	-15 ~ +24	-15 ~ +24	-15 ~ +24	-15 ~ +24	-15 ~ +24	-15 ~ +24	-15 ~ +24

Accessories	
CZ-CAPRA1	RAC interface adapter for integration into P-Link

Accessories	
CZ-RD514C	Wired remote controller for Wall-mounted and Floor Console

1) EER and COP calculation is based in accordance to EN14511. 2) Energy Label Scale from A+++ to D. 3) The annual energy consumption is calculated in accordance to EU/626/2011. 4) The sound pressure of the indoor unit shows the value measured of a position 1 m in front of the main body and 0,8 m below the unit. For outdoor unit 1 m in front and 1 m in rear side of main body. The sound pressure is measured in accordance with JIS C 9612. Q-Lo: Quiet mode. Lo: The lowest set fan speed. 5) Add 70 mm for piping port. 6) When installing the outdoor unit at a higher position than the indoor unit.

SEER and SCOP: For KIT-TZ20-WKE and KIT-TZ25-WKE. SUPER QUIET: For KIT-TZ20-WKE, KIT-TZ25-WKE and KIT-TZ35-WKE. INTERNET CONTROL: Built-in WLAN.

New Wall-mounted FZ super-compact Inverter • R32 refrigerant

NEW 2020

Technical focus

- **NEW** Compact design with 779 mm
- PM2,5 Filter to create clean and comfortable indoor air quality
- Super Quiet! Only 20 dB(A)
- Aerowings to control air draft direction
- High energy savings
- Cooling even at -10 °C
- This units can be installed on R410A and R22 pipings
- Long connection distance
- Wired control (Optional)
- Smartphone control (Optional)

CZ-TACG1
Optional WLAN Panasonic Comfort Cloud for internet control.

Kit			KIT-FZ25-WKE	KIT-FZ35-WKE	KIT-FZ50-WKE	KIT-FZ60-WKE
Cooling capacity	Nominal (Min - Max)	kW	2,50 (0,85 - 3,00)	3,40 (0,85 - 3,90)	5,00 (0,98 - 5,40)	6,00 (0,98 - 6,50)
EER [1]	Nominal (Min - Max)	W/W	3,68 (4,05 - 3,33)	3,18 (3,54 - 3,05)	3,03 (3,92 - 2,90)	3,03 (3,92 - 2,83)
SEER [2]			**6,20 A++**	**6,10 A++**	**6,50 A++**	**6,30 A++**
Pdesign (cooling)		kW	2,50	3,40	5,00	6,00
Input power cooling	Nominal (Min - Max)	kW	0,68 (0,21 - 0,90)	1,07 (0,24 - 1,28)	1,65 (0,25 - 1,86)	1,98 (0,25 - 2,30)
Annual energy consumption [3]		kWh/a	141	195	269	333
Heating capacity	Nominal (Min - Max)	kW	3,15 (0,80 - 3,60)	3,84 (0,80 - 4,40)	5,40 (0,98 - 7,50)	6,80 (0,98 - 8,00)
Heating capacity at -7 °C		kW	2,14	2,60	4,58	5,10
COP [1]	Nominal (Min - Max)	W/W	4,04 (4,21 - 3,46)	3,66 (4,10 - 3,41)	3,42 (4,67 - 3,06)	3,15 (4,26 - 3,02)
SCOP [2]			**4,20 A+**	**4,20 A+**	**4,10 A+**	**4,00 A+**
Pdesign at -10 °C		kW	1,90	2,40	4,00	4,40
Input power heating	Nominal (Min - Max)	kW	0,78 (0,19 - 1,04)	1,05 (0,20 - 1,29)	1,58 (0,21 - 2,45)	2,16 (0,23 - 2,65)
Annual energy consumption [3]		kWh/a	633	800	1366	1540
Indoor unit			**CS-FZ25WKE**	**CS-FZ35WKE**	**CS-FZ50WKE**	**CS-FZ60WKE**
Power source		V	230	230	230	230
Recommended fuse		A	16	16	16	20
Connection indoor / outdoor		mm²	4 x 1,5	4 x 1,5	4 x 2,5	4 x 2,5
Air volume	Cool / Heat	m³/min	10,5 / 11,1	10,8 / 11,3	12,5 / 13,2	12,7 / 13,6
Moisture removal volume		L/h	1,5	2,0	2,8	3,3
Sound pressure [4]	Cool (Hi / Lo / Q-Lo)	dB(A)	37 / 26 / 20	38 / 30 / 20	44 / 37 / 34	45 / 37 / 34
	Heat (Hi / Lo / Q-Lo)	dB(A)	37 / 27 / 24	38 / 33 / 25	44 / 37 / 34	45 / 37 / 34
Dimension	H x W x D	mm	290 x 779 x 209	290 x 779 x 209	290 x 779 x 209	290 x 779 x 209
Net weight		kg	8	8	8	9
Outdoor unit			**CU-FZ25WKE**	**CU-FZ35WKE**	**CU-FZ50WKE**	**CU-FZ60WKE**
Air volume	Cool / Heat	m³/min	30,4 / 30,4	31,1 / 31,1	32,7 / 32,7	42,6 / 41,5
Sound pressure [4]	Cool / Heat (Hi)	dB(A)	48 / 49	48 / 50	48 / 49	50 / 50
Dimension [5]	H x W x D	mm	542 x 780 x 289	542 x 780 x 289	619 x 824 x 299	695 x 875 x 320
Net weight		kg	24	25	36	43
Piping connections	Liquid pipe	Inch (mm)	1/4 (6,35)	1/4 (6,35)	1/4 (6,35)	1/4 (6,35)
	Gas pipe	Inch (mm)	3/8 (9,52)	3/8 (9,52)	1/2 (12,70)	1/2 (12,70)
Pipe length range		m	3 ~ 15	3 ~ 15	3 ~ 15	3 ~ 30
Elevation difference (in/out) [6]		m	15	15	15	15
Pipe length for additional gas		m	7,5	7,5	7,5	7,5
Additional gas amount		g/m	10	10	15	15
Refrigerant (R32) / CO_2 Eq,		kg / T	0,54 / 0,365	0,67 / 0,452	1,14 / 0,770	1,11 / 0,749
Operating range	Cool Min ~ Max	°C	-10 ~ +43	-10 ~ +43	-10 ~ +43	-10 ~ +43
	Heat Min ~ Max	°C	-15 ~ +24	-15 ~ +24	-15 ~ +24	-15 ~ +24

Accessories	
CZ-TACG1	Panasonic Comfort Cloud for internet control
CZ-CAPRA1	RAC interface adapter for integration into P-Link

Accessories	
CZ-RD514C	Wired remote controller for Wall-mounted and Floor Console

1) EER and COP calculation is based in accordance to EN14511. 2) Energy Label Scale from A+++ to D. 3) The annual energy consumption is calculated in accordance to EU/626/2011. 4) The sound pressure of the indoor unit shows the value measured of a position 1 m in front of the main body and 0,8 m below the unit. For outdoor unit 1 m in front and 1 m in rear side of main body. The sound pressure is measured in accordance with JIS C 9612. Q-Lo: Quiet mode. Lo: The lowest set fan speed. 5) Add 70 mm for piping port. 6) When installing the outdoor unit at a higher position than the indoor unit.

SEER and SCOP: For KIT-FZ50-WKE. SUPER QUIET: For KIT-FZ25-WKE and KIT-FZ35-WKE. INTERNET CONTROL: Optional.

Rating Conditions: Cooling Indoor 27°C DB / 19°C WB. Cooling Outdoor 35°C DB / 24°C WB. Heating Indoor 20°C DB. Heating Outdoor 7°C DB / 6°C WB. (DB: Dry Bulb; WB: Wet Bulb).
Specifications subject to change without notice. For detailed information about ErP / Energy Labelling, please visit our websites www.aircon.panasonic.eu or www.ptc.panasonic.eu.

Wall-mounted Professional Inverter -20 °C • R32 refrigerant

Technical focus

- Aerowings to control air draft direction
- Designed for 24h/7d a week operation
- Up to A+++ in cooling
- Highly efficient even at -20 °C
- High durability rolling bearings
- Additional piping sensors to prevent freezing
- Automatic restart

CZ-TACG1
Optional WLAN Panasonic Comfort Cloud for internet control.

KIT			KIT-Z25-TKEA	KIT-Z35-TKEA	KIT-Z42-TKEA	KIT-Z50-TKEA	KIT-Z71-TKEA
Cooling capacity	Nominal (Min - Max)	kW	2,50 (0,85 - 3,00)	3,50 (0,85 - 4,00)	4,20 (0,98 - 5,00)	5,00 (0,98 - 6,00)	7,10 (0,98 - 8,10)
EER [1]	Nominal (Min - Max)	W/W	4,90 (5,00 - 4,29)	4,07 (5,00 - 3,64)	3,82 (4,90 - 3,25)	3,60 (3,50 - 3,09)	3,17 (2,33 - 3,03)
SEER [2]			**8,50 A+++**	**8,50 A+++**	**8,50 A+++**	**8,50 A+++**	**6,10 A++**
Pdesign		kW	2,50	3,50	4,20	5,00	7,10
Input power cooling	Nominal (Min - Max)	kW	0,51 (0,17 - 0,70)	0,86 (0,17 - 1,10)	1,10 (0,20 - 1,54)	1,39 (0,28 - 1,94)	2,24 (0,42 - 2,67)
Annual energy consumption [3]		kWh/a	103	144	173	206	407
Heating capacity	Nominal (Min - Max)	kW	3,40 (0,85 - 5,40)	4,00 (0,85 - 6,60)	5,40 (0,98 - 7,25)	5,80 (0,98 - 8,00)	8,60 (0,98 - 9,90)
Heating capacity at -7 °C		kW	3,33	4,07	4,30	5,00	6,13
COP [1]	Nominal (Min - Max)	W/W	4,86 (5,15 - 4,12)	4,35 (5,15 - 3,63)	4,00 (4,45 - 3,37)	4,03 (2,88 - 3,20)	3,51 (2,45 - 3,47)
SCOP [2]			**4,50 A+**	**4,40 A+**	**4,30 A+**	**4,40 A+**	**4,00 A+**
Pdesign at -10 °C		kW	2,80	3,60	3,80	4,40	5,50
Input power heating	Nominal (Min - Max)	kW	0,70 (0,17 - 1,31)	0,92 (0,17 - 1,82)	1,35 (0,22 - 2,15)	1,44 (0,34 - 2,50)	2,45 (0,40 - 2,85)
Annual energy consumption [3]		kWh/a	871	1145	1237	1400	1925
Indoor unit			**CS-Z25TKEA**	**CS-Z35TKEA**	**CS-Z42TKEA**	**CS-Z50TKEA**	**CS-Z71TKEA**
Power source		V	230	230	230	230	230
Recommended fuse		A	16	16	16	16	20
Connection indoor / outdoor		mm²	4 x 1,5	4 x 1,5	4 x 1,5	4 x 2,5	4 x 2,5
Air Volume	Cool / Heat	m³/min	10,4 / 11,7	10,7 / 12,4	18,2 / 20,2	19,2 / 21,3	20,2 / 21,0
Moisture removal volume		L/h	1,5	2,0	2,4	2,8	4,1
Sound pressure [4]	Cool (Hi / Lo / Q-Lo)	dB(A)	39 / 25 / 21	42 / 28 / 21	43 / 32 / 29	44 / 37 / 30	47 / 38 / 35
	Heat (Hi / Lo / Q-Lo)	dB(A)	41 / 27 / 22	43 / 30 / 22	44 / 35 / 29	44 / 37 / 30	47 / 38 / 35
Dimension	H x W x D	mm	295 x 919 x 194	295 x 919 x 194	302 x 1120 x 236	302 x 1120 x 236	302 x 1120 x 236
Net weight		kg	9	10	12	12	13
Outdoor unit			**CU-Z25TKEA**	**CU-Z35TKEA**	**CU-Z42TKEA**	**CU-Z50TKEA**	**CU-Z71TKEA**
Sound pressure [4]	Cool / Heat (Hi)	dB(A)	46 / 48	48 / 50	48 / 50	48 / 50	52 / 54
Dimension [5]	H x W x D	mm	619 x 824 x 299	619 x 824 x 299	619 x 824 x 299	695 x 875 x 320	695 x 875 x 320
Net weight		kg	37	38	38	43	49
Piping connections	Liquid pipe	Inch (mm)	1/4 (6,35)	1/4 (6,35)	1/4 (6,35)	1/4 (6,35)	1/4 (6,35)
	Gas pipe	Inch (mm)	3/8 (9,52)	3/8 (9,52)	1/2 (12,70)	1/2 (12,70)	5/8 (15,88)
Pipe length range		m	3 ~ 20	3 ~ 20	3 ~ 20	3 ~ 30	3 ~ 30
Elevation difference (in/out) [6]		m	15	15	15	15	20
Pipe length for additional gas		m	7,5	7,5	7,5	7,5	10
Additional gas amount		g/m	10	10	10	15	25
Refrigerant (R32) / CO_2 Eq.		kg / T	0,96 / 0,648	1,00 / 0,675	1,08 / 0,729	1,15 / 0,776	1,32 / 0,891
Operating range	Cool Min ~ Max	°C	-20 ~ +43	-20 ~ +43	-20 ~ +43	-20 ~ +43	-20 ~ +43
	Heat Min ~ Max	°C	-15 ~ +24	-15 ~ +24	-15 ~ +24	-15 ~ +24	-15 ~ +24

Accessories	
CZ-TACG1*	Panasonic Comfort Cloud for internet control
CZ-CAPRA1*	RAC interface adapter for integration into P-Link
PAW-SERVER-PKEA*	PCB for installation in server rooms with security

Accessories	
PAW-WTRAY	Tray for condenser water compatible with outdoor elevation platform
PAW-GRDBSE20	Outdoor base ground support for noise and vibration absorption
PAW-GRDSTD40	Outdoor elevation platform 400 x 900 x 400 mm

1) EER and COP calculation is based in accordance to EN14511. 2) Energy Label Scale from A+++ to D. 3) The annual energy consumption is calculated in accordance to EU/626/2011. 4) The sound pressure of the indoor unit shows the value measured of a position 1 m in front of the main body and 0,8 m below the unit. For outdoor unit 1 m in front and 1 m in rear side of main body. The sound pressure is measured in accordance with JIS C 9612. Q-Lo: Quiet mode. Lo: The lowest set fan speed. 5) Add 70 mm for piping port. 6) When installing the outdoor unit at a higher position than the indoor unit.
* Only one of these can be used at a time.

R32 · A+++ 8,50 SEER · A+ 4,50 SCOP · INVERTER · R2 ROTARY COMPRESSOR · 21dB(A) · AEROWINGS · -20°C COOLING MODE · -15°C HEATING MODE · R22 R410A R32 R22/R410A RENEWAL · INTEGRATION TO P-LINK · OPTIONAL WLAN · BMS CONNECTIVITY · 5 YEARS COMPRESSOR WARRANTY

SEER and SCOP: For KIT-Z25-TKEA. SUPER QUIET: For KIT-Z25-TKEA. INTERNET CONTROL: Optional.

Floor Console Inverter+
• R32 refrigerant

Technical focus

- nanoe™ X with nano-technology, nano-sized electrostatic atomised water particles clean the air in the room
- Infrared control Sky Controller
- A breakthrough design that integrates perfectly with the most modern environments. We have selected the finest materials and processes for a refined design
- High energy efficiency class A++ SEER and A++ SCOP
- Control your comfort and the power consumption with internet control

CZ-TACG1
Optional WLAN Panasonic Comfort Cloud for internet control.

Kit			KIT-Z25-UFE	KIT-Z35-UFE	KIT-Z50-UFE
Cooling capacity	Nominal (Min - Max)	kW	2,50 (0,85 - 3,40)	3,50 (0,85 - 3,80)	5,00 (0,90 - 5,70)
EER [1]	Nominal (Min - Max)	W/W	4,81 (3,54 - 3,78)	4,07 (3,54 - 3,73)	3,60 (3,53 - 3,15)
SEER [2]			**7,90 A++**	**8,10 A++**	**6,70 A++**
Pdesign (cooling)		kW	2,50	3,50	5,00
Input power cooling	Nominal (Min - Max)	kW	0,52 (0,24 - 0,90)	0,86 (0,24 - 1,02)	1,39 (0,26 - 1,81)
Annual energy consumption [3]		kWh/a	111	151	261
Heating capacity	Nominal (Min - Max)	kW	3,40 (0,85 - 5,00)	4,30 (0,85 - 6,00)	5,80 (0,90 - 8,10)
Heating capacity at -7 °C		kW	2,88	3,37	5,03
COP [1]	Nominal (Min - Max)	W/W	4,47 (3,54 - 3,70)	3,98 (3,54 - 3,43)	3,74 (3,46 - 3,12)
SCOP [2]			**4,60 A++**	**4,60 A++**	**4,30 A+**
Pdesign at -10 °C		kW	2,70	3,20	4,40
Input power heating	Nominal (Min - Max)	kW	0,76 (0,24 - 1,35)	1,08 (0,24 - 1,75)	1,55 (0,26 - 2,60)
Annual energy consumption [3]		kWh/a	822	974	1433
Indoor unit			**CS-Z25UFEAW**	**CS-Z35UFEAW**	**CS-Z50UFEAW**
Air volume	Cool / Heat	m³/min	9,6 / 9,9	9,9 / 10,1	11,6 / 13,2
Moisture removal volume		L/h	1,5	2,0	2,8
Sound pressure [4]	Cool (Hi / Lo / Q-Lo)	dB(A)	38 / 25 / 20	39 / 26 / 20	44 / 31 / 27
	Heat (Hi / Lo / Q-Lo)	dB(A)	38 / 25 / 19	39 / 26 / 19	46 / 33 / 29
Dimension	H x W x D	mm	600 x 750 x 207	600 x 750 x 207	600 x 750 x 207
Net weight		kg	13	13	13
Outdoor unit			**CU-Z25UBEA**	**CU-Z35UBEA**	**CU-Z50UBEA**
Power source		V	230	230	230
Recommended fuse		A	16	16	16
Connection indoor / outdoor		mm²	—	—	—
Air volume	Cool / Heat	m³/min	28,7 / 27,2	34,3 / 33,5	39,7 / 38,6
Sound pressure [4]	Cool / Heat (Hi)	dB(A)	46 / 47	48 / 48	48 / 48
Dimension [5]	H x W x D	mm	542 x 780 x 289	619 x 824 x 299	695 x 875 x 320
Net weight		kg	33	35	43
Piping connections	Liquid pipe	Inch (mm)	1/4 (6,35)	1/4 (6,35)	1/4 (6,35)
	Gas pipe	Inch (mm)	3/8 (9,52)	3/8 (9,52)	1/2 (12,70)
Pipe length range		m	3 ~ 20	3 ~ 20	3 ~ 30
Elevation difference (in/out) [6]		m	15	15	20
Pipe length for additional gas		m	7,5	7,5	7,5
Additional gas amount		g/m	10	10	15
Refrigerant (R32) / CO_2 Eq.		kg / T	0,88 / 0,594	0,93 / 0,628	1,13 / 0,763
Operating range	Cool Min ~ Max	°C	-10 ~ +43	-10 ~ +43	-10 ~ +43
	Heat Min ~ Max	°C	-15 ~ +24	-15 ~ +24	-15 ~ +24

Accessories	
CZ-TACG1	Panasonic Comfort Cloud for internet control
CZ-CAPRA1	RAC interface adapter for integration into P-Link

Accessories	
CZ-RD514C	Wired remote controller for Wall-mounted and Floor Console

1) EER and COP calculation is based in accordance to EN14511. 2) Energy Label Scale from A+++ to D. 3) The annual energy consumption is calculated in accordance to EU/626/2011. 4) The sound pressure of the units shows the value measured of a position 1 m in front of the main body and 1 m above floor. The sound pressure is measured in accordance with JIS C 9612. Q-Lo: Quiet mode. Lo: The lowest set fan speed. 5) Add 70 mm for piping port. 6) When installing the outdoor unit at a higher position than the indoor unit.

SEER and SCOP: For KIT-Z35-UFE. SUPER QUIET: For KIT-Z25-UFE and KIT-Z35-UFE. INTERNET CONTROL: Optional. iF DESIGN AWARD 2019: Floor Console awarded with the prestigious IF Design Award 2019.

Rating Conditions: Cooling Indoor 27°C DB / 19°C WB. Cooling Outdoor 35°C DB / 24°C WB. Heating Indoor 20°C DB. Heating Outdoor 7°C DB / 6°C WB. (DB: Dry Bulb; WB: Wet Bulb).
Specifications subject to change without notice. For detailed information about ErP / Energy Labelling, please visit our websites www.aircon.panasonic.eu or www.ptc.panasonic.eu.

4 Way 60x60 Cassette Inverter
• R32 refrigerant

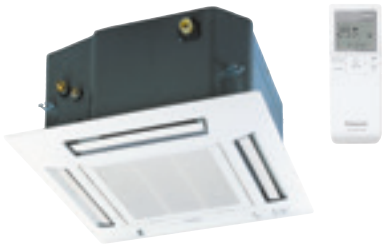

Technical focus

- Cassettes can be controlled by KNX and Modbus
- Designed for easy installation in the standard European 60x60 ceiling grid
- Piping length up to 30 m
- Maximum elevation difference up to 20 m
- Ultra compact outdoor units for easy installation
- High pressure selector in case of high ceilings (higher than 2,7 m)
- Drain pump included (maximum 750 mm high)
- Air fresh entry available on the Cassette

CZ-BT20EW
RAL9010 panel for 4 Way 60x60 Cassette.

CZ-TACG1
Optional WLAN Panasonic Comfort Cloud for internet control.

KIT			KIT-Z25-UB4	KIT-Z35-UB4	KIT-Z50-UB4	KIT-Z60-UB4
Cooling capacity	Nominal (Min - Max)	kW	2,50 (0,85 - 3,20)	3,50 (0,85 - 4,00)	5,00 (0,90 - 5,80)	6,00 (0,90 - 6,35)
EER [1]	Nominal (Min - Max)	W/W	4,55 (3,54 - 3,90)	3,89 (3,54 - 3,39)	3,25 (3,53 - 3,09)	2,93 (3,53 - 2,89)
SEER [2]			**6,30 A++**	**6,50 A++**	**6,40 A++**	**6,20 A++**
Pdesign (cooling)		kW	2,50	3,50	5,00	6,00
Input power cooling	Nominal (Min - Max)	kW	0,55 (0,24 - 0,82)	0,90 (0,24 - 1,18)	1,54 (0,26 - 1,88)	2,05 (0,26 - 2,20)
Annual energy consumption [3]		kWh/a	139	188	273	339
Heating capacity	Nominal (Min - Max)	kW	3,20 (0,85 - 4,80)	4,50 (0,85 - 5,60)	5,60 (0,90 - 7,10)	7,00 (0,90 - 8,00)
Heating capacity at -7 °C		kW	2,88	3,37	4,40	5,10
COP [1]	Nominal (Min - Max)	W/W	4,05 (3,70 - 3,64)	3,31 (3,70 - 3,20)	3,03 (3,46 - 2,95)	2,92 (3,46 - 2,91)
SCOP [2]			**4,30 A+**	**4,20 A+**	**4,30 A+**	**4,20 A+**
Pdesign at -10 °C		kW	2,70	3,00	3,80	4,00
Input power heating	Nominal (Min - Max)	kW	0,79 (0,23 - 1,32)	1,36 (0,23 - 1,75)	1,85 (0,26 - 2,41)	2,40 (0,26 - 2,75)
Annual energy consumption [3]		kWh/a	879	1000	1237	1333
Indoor unit			**CS-Z25UB4EAW**	**CS-Z35UB4EAW**	**CS-Z50UB4EAW**	**CS-Z60UB4EAW**
Panel			**CZ-BT20EW**	**CZ-BT20EW**	**CZ-BT20EW**	**CZ-BT20EW**
Air volume	Cool / Heat	m³/min	10,5 / 10,8	10,5 / 10,8	11,5 / 11,8	12,4 / 13,5
Moisture removal volume		L/h	1,5	2,0	2,8	3,3
Sound pressure [4]	Cool (Hi / Lo / Q-Lo)	dB(A)	34 / 25 / 22	34 / 26 / 23	37 / 28 / 25	42 / 32 / 29
	Heat (Hi / Lo / Q-Lo)	dB(A)	35 / 28 / 25	35 / 28 / 25	38 / 29 / 26	43 / 32 / 29
Dimension (H x W x D)	Indoor	mm	260 x 575 x 575	260 x 575 x 575	260 x 575 x 575	260 x 575 x 575
	Panel	mm	51 x 700 x 700	51 x 700 x 700	51 x 700 x 700	51 x 700 x 700
Net weight	Indoor / Panel	kg	18 / 2,5	18 / 2,5	18 / 2,5	18 / 2,5
Outdoor unit			**CU-Z25UBEA**	**CU-Z35UBEA**	**CU-Z50UBEA**	**CU-Z60UBEA**
Power source		V	230	230	230	230
Recommended fuse		A	—	—	—	—
Connection indoor / outdoor		mm²	—	—	—	—
Air volume	Cool / Heat	m³/min	28,7 / 27,2	34,3 / 33,5	39,7 / 38,6	42,6 / 41,5
Sound pressure [4]	Cool / Heat (Hi)	dB(A)	46 / 47	48 / 48	48 / 48	49 / 50
Dimension [5]	H x W x D	mm	542 x 780 x 289	619 x 824 x 299	695 x 875 x 320	695 x 875 x 320
Net weight		kg	33	35	43	43
Piping connections	Liquid pipe	Inch (mm)	1/4 (6,35)	1/4 (6,35)	1/4 (6,35)	1/4 (6,35)
	Gas pipe	Inch (mm)	3/8 (9,52)	3/8 (9,52)	1/2 (12,70)	1/2 (12,70)
Pipe length range		m	3 ~ 20	3 ~ 20	3 ~ 30	3 ~ 30
Elevation difference (in/out) [6]		m	15	15	20	20
Pipe length for additional gas		m	7,5	7,5	7,5	7,5
Additional gas amount		g/m	10	10	15	15
Refrigerant (R32) / CO_2 Eq.		kg / T	0,88 / 0,594	0,93 / 0,628	1,13 / 0,763	1,13 / 0,763
Operating range	Cool Min ~ Max	°C	-10 ~ +43	-10 ~ +43	-10 ~ +43	-10 ~ +43
	Heat Min ~ Max	°C	-15 ~ +24	-15 ~ +24	-15 ~ +24	-15 ~ +24

Accessories	
CZ-TACG1	Panasonic Comfort Cloud for internet control
CZ-CAPRA1	RAC interface adapter for integration into P-Link

Accessories	
CZ-RD52CP	Wired remote controller for Cassette

1) EER and COP calculation is based in accordance to EN14511. 2) Energy Label Scale from A+++ to D. 3) The annual energy consumption is calculated in accordance to EU/626/2011. 4) The sound pressure of the indoor unit shows the value measured of a position 1,5 m below the unit. For outdoor unit 1 m in front and 1 m in rear side of main body. The sound pressure is measured in accordance with JIS C 9612. Q-Lo: Quiet mode. Lo: The lowest set fan speed. 5) Add 70 mm for piping port. 6) When installing the outdoor unit at a higher position than the indoor unit.

SEER and SCOP: For KIT-Z35-UB4. SUPER QUIET: For KIT-Z25-UB4. INTERNET CONTROL: Optional.

Low Static Pressure Hide Away Inverter • R32 refrigerant

Technical focus

- Duct type can be controlled by KNX and Modbus
- Eco mode for 20 % energy saving
- Extremely compact indoor units without losing static pressure (only 200 mm high)
- Weekly timer, 42 settings per week
- Easy check mode for failure detection
- Drain pump included

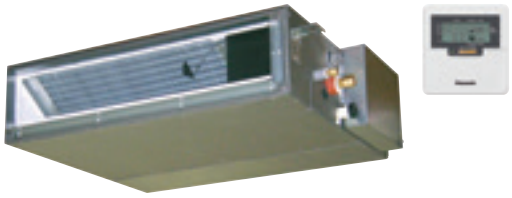

CZ-RL511D
Optional wireless kit.

CZ-TACG1
Optional WLAN Panasonic Comfort Cloud for internet control.

KIT			KIT-Z25-UD3	KIT-Z35-UD3	KIT-Z50-UD3	KIT-Z60-UD3
Cooling capacity	Nominal (Min - Max)	kW	2,50 (0,85 - 3,20)	3,50 (0,85 - 4,00)	5,10 (0,90 - 5,70)	6,00 (0,90 - 6,50)
EER [1]	Nominal (Min - Max)	W/W	4,31 (3,54 - 3,76)	3,85 (3,54 - 3,36)	3,27 (3,53 - 3,20)	2,94 (3,53 - 2,83)
SEER [2]			**5,90 A+**	**5,80 A+**	**5,90 A+**	**5,60 A+**
Pdesign (cooling)		kW	2,50	3,50	5,10	6,00
Input power cooling	Nominal (Min - Max)	kW	0,58 (0,24 - 0,85)	0,91 (0,24 - 1,19)	1,56 (0,26 - 1,78)	2,04 (0,26 - 2,30)
Annual energy consumption [3]		kWh/a	148	211	303	375
Heating capacity	Nominal (Min - Max)	kW	3,20 (0,85 - 4,60)	4,20 (0,85 - 5,10)	6,10 (0,90 - 7,20)	7,00 (0,90 - 8,00)
Heating capacity at -7 °C		kW	2,60	3,00	4,50	5,10
COP [1]	Nominal (Min - Max)	W/W	4,00 (3,70 - 3,68)	3,82 (3,70 - 3,59)	3,35 (3,46 - 3,27)	3,24 (3,46 - 3,08)
SCOP [2]			**4,20 A+**	**4,10 A+**	**4,10 A+**	**4,10 A+**
Pdesign at -10 °C		kW	2,60	2,80	4,00	4,60
Input power heating	Nominal (Min - Max)	kW	0,80 (0,23 - 1,25)	1,10 (0,23 - 1,42)	1,82 (0,26 - 2,20)	2,16 (0,26 - 2,60)
Annual energy consumption [3]		kWh/a	867	956	1366	1571
Indoor unit			**CS-Z25UD3EAW**	**CS-Z35UD3EAW**	**CS-Z50UD3EAW**	**CS-Z60UD3EAW**
External static pressure [4]	Min - Max	Pa	15 - 45	15 - 45	15 - 50	15 - 50
Air volume	Cool / Heat	m³/min	10,5 / 10,5	11,2 / 11,2	15,3 / 15,3	15,7 / 15,7
Moisture removal volume		L/h	1,5	2,0	2,8	3,3
Sound pressure [5]	Cool (Hi / Lo / Q-Lo)	dB(A)	33 / 27 / 24	33 / 27 / 24	39 / 29 / 26	41 / 30 / 27
	Heat (Hi / Lo / Q-Lo)	dB(A)	35 / 27 / 24	35 / 27 / 24	39 / 30 / 27	41 / 32 / 29
Dimension	H x W x D	mm	200 x 750 x 640	200 x 750 x 640	200 x 750 x 640	200 x 750 x 640
Net weight		kg	19	19	19	19
Outdoor unit			**CU-Z25UBEA**	**CU-Z35UBEA**	**CU-Z50UBEA**	**CU-Z60UBEA**
Power source		V	230	230	230	230
Recommended fuse		A	16	16	16	—
Connection indoor / outdoor		mm²	4 x 1,5 ~ 2,5	4 x 1,5 ~ 2,5	4 x 1,5 ~ 2,5	—
Air volume	Cool / Heat	m³/min	28,7 / 27,2	34,3 / 33,5	39,7 / 38,6	42,6 / 41,5
Sound pressure [5]	Cool / Heat (Hi)	dB(A)	46 / 47	48 / 48	48 / 48	49 / 50
Dimension [6]	H x W x D	mm	542 x 780 x 289	619 x 824 x 299	695 x 875 x 320	695 x 875 x 320
Net weight		kg	33	35	43	43
Piping connections	Liquid pipe	Inch (mm)	1/4 (6,35)	1/4 (6,35)	1/4 (6,35)	1/4 (6,35)
	Gas pipe	Inch (mm)	3/8 (9,52)	3/8 (9,52)	1/2 (12,70)	1/2 (12,70)
Pipe length range		m	3 ~ 20	3 ~ 20	3 ~ 30	3 ~ 30
Elevation difference (in/out) [7]		m	15	15	20	20
Pipe length for additional gas		m	7,5	7,5	7,5	7,5
Additional gas amount		g/m	10	10	15	15
Refrigerant (R32) / CO_2 Eq.		kg / T	0,88 / 0,594	0,93 / 0,628	1,13 / 0,763	1,13 / 0,763
Operating range	Cool Min ~ Max	°C	-10 ~ +43	-10 ~ +43	-10 ~ +43	-10 ~ +43
	Heat Min ~ Max	°C	-15 ~ +24	-15 ~ +24	-15 ~ +24	-15 ~ +24

Accessories	
CZ-TACG1	Panasonic Comfort Cloud for internet control
CZ-CAPRA1	RAC interface adapter for integration into P-Link

Accessories	
CZ-RL511D	Infrared remote controller Sky Remote. 2 m cable length of infrared receiver

1) EER and COP calculation is based in accordance to EN14511. 2) Energy Label Scale from A+++ to D. 3) The annual energy consumption is calculated in accordance to EU/626/2011. 4) The specification listed on the table indicates values under the condition of 25Pa (2,5 mmAq) which are applied for factory default setting. Change switch on PCB from Hi to S-Hi to have more than 6,0 mmAq. 5) The sound pressure of the indoor unit shows the value measured of a position of 1,5 m below the unit with 1 m duct on the suction side and 2 m duct on the discharge side. For outdoor unit 1 m in front and 1 m in rear side of main body. The sound pressure is measured in accordance with JIS C 9612. 6) Add 100 mm for indoor unit or 70 mm for outdoor unit for piping port. 7) When installing the outdoor unit at a higher position than the indoor unit.

R32 · A+ 5,90 SEER · A+ 4,20 SCOP · INVERTER · R2 ROTARY COMPRESSOR · STATIC PRESSURE UP TO 7 mmAq · -10°C COOLING MODE · -15°C HEATING MODE · FILTER INCLUDED · R22 R410A R32 R22/R410A RENEWAL · INTEGRATION TO P-LINK · OPTIONAL WLAN · BMS CONNECTIVITY · 5 YEARS COMPRESSOR WARRANTY

SEER and SCOP: For KIT-Z25-UD3. INTERNET CONTROL: Optional.

Rating Conditions: Cooling Indoor 27°C DB / 19°C WB. Cooling Outdoor 35°C DB / 24°C WB. Heating Indoor 20°C DB. Heating Outdoor 7°C DB / 6°C WB. (DB: Dry Bulb; WB: Wet Bulb).
Specifications subject to change without notice. For detailed information about ErP / Energy Labelling, please visit our websites www.aircon.panasonic.eu or www.ptc.panasonic.eu.

Multi Split and Free Multi System

If air conditioning requirements exceed the ambit of a single room, Panasonic offers an extensive range of possibilities with up to 5 indoor units connected to a single outdoor unit.

Panasonic offers widest range in Multi Split systems

Multi Split range from 3,5 to 9,0 kW for 5 indoor units with one outdoor unit.

Free Multi Z
Full flexibility up to 9,0 kW and up to 5 ports with wide range of indoor units including high performance Etherea indoor units, reaching up to A+++ / A++

				Indoor units				
Line up	**Capacities**	**Indoor unit ports**	**Efficiency up to**	**Etherea**	**TZ super-compact**	**Floor Console**	**Cassette**	**Hide Away**
Multi Z	8 units (3,5 ~ 9,0 kW)	2~5	**A+++ / A++**	Yes	Yes	Yes	Yes	Yes

Multi Split systems

Day and Night	Simultaneous
Ideal for 2 day and night areas. Simultaneous use possible.	When indoor units are most time working at same time.

Why a Multi Split is better than several separate split units

Up to 5 indoor units with a single outdoor unit.

- Just one compact outdoor unit
- Increased comfort in the house since every room has its own indoor unit for heating
- Much more powerful than a single split
- More efficient since the units are always operating at full capacity
- You can connect all types of indoor units, such as wall types and consoles, depending on what suits your house best

Solution with single split.
One indoor unit is connected to one outdoor unit. The indoor unit is placed in the main hallway and heats the entire house. Certain rooms may not be perfectly heated, which causes inadequate comfort.

Solution with Multi Split.
With one outdoor unit, you can connect up to five indoor units. There is one indoor unit per room or area. It gives an extreme increase in comfort levels. On the roof, there is only one outdoor unit.

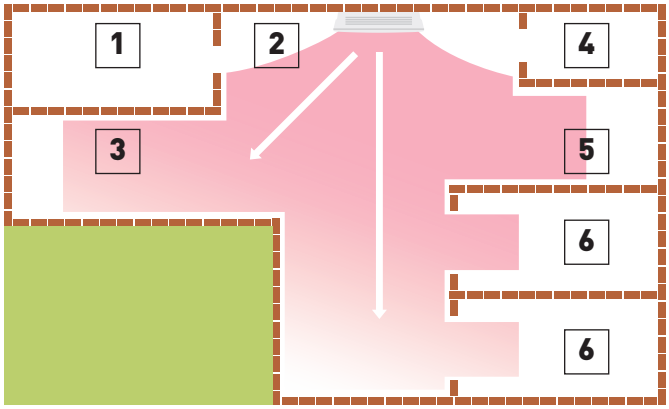

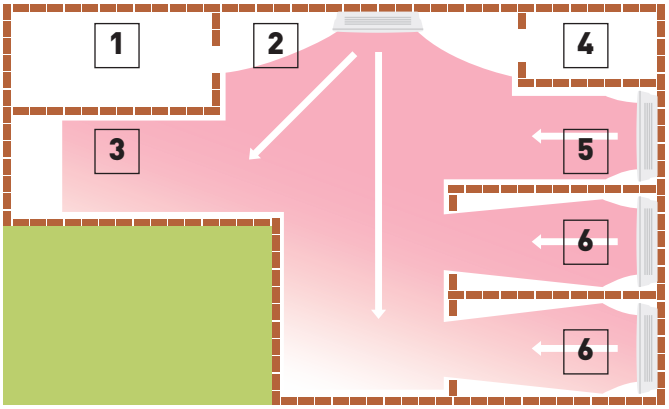

1. Laundry room. 2. Entrance. 3. Kitchen/dining area. 4. Bathroom. 5. Living room. 6. Bedroom.

R32 · INVERTER+ · R2 ROTARY COMPRESSOR · -15°C HEATING MODE · R22 R410A → R32 R22/R410A RENEWAL · 5 YEARS COMPRESSOR WARRANTY

Outdoor unit Free Multi System Z • R32 refrigerant

Indoor nominal capacity (Min - Max)			3,2 ~ 6,0 kW	3,2 ~ 6,0 kW	3,2 ~ 7,7 kW	4,5 ~ 9,5 kW	4,5 ~ 11,2 kW	4,5 ~ 11,5 kW	4,5 ~ 14,7 kW	4,5 ~ 18,3 kW
Unit			**CU-2Z35TBE**	**CU-2Z41TBE**	**CU-2Z50TBE**	**CU-3Z52TBE**	**CU-3Z68TBE**	**CU-4Z68TBE**	**CU-4Z80TBE**	**CU-5Z90TBE**
Cooling capacity	Nominal (Min - Max)	kW	3,50 (1,50 - 4,50)	4,10 (1,50 - 5,20)	5,00 (1,50 - 5,40)	5,20 (1,80 - 7,30)	6,80 (1,90 - 8,00)	6,80 (1,90 - 8,80)	8,00 (3,00 - 9,20)	9,00 (2,90 - 11,50)
EER [1]	Nominal (Min - Max)	W/W	4,86 (6,00 - 4,09)	4,56 (6,00 - 3,80)	4,24 (6,00 - 3,62)	4,77	3,66 (7,04 - 3,38)	4,39 (5,59 - 3,56)	4,04 (5,66 - 3,21)	4,09 (5,27 - 2,98)
SEER [2]			**8,50 A+++**	**8,50 A+++**	**8,50 A+++**	**8,50 A+++**	**8,00 A++**	**8,00 A++**	**7,90 A++**	**8,50 A+++**
Pdesign (cooling)		kW	3,50	4,10	5,00	5,20	6,80	6,80	8,00	9,00
Input power cooling	Nominal (Min - Max)	kW	0,72 (0,25 - 1,10)	0,90 (0,25 - 1,37)	1,18 (0,25 - 1,49)	1,09 (0,36 - 2,18)	1,86 (0,27 - 2,37)	1,55 (0,34 - 2,47)	1,98 (0,53 - 2,87)	2,20 (0,55 - 3,86)
Annual energy consumption [3]		kWh/a	144	169	206	214	298	298	990	1100
Heating capacity	Nominal (Min - Max)	kW	4,20 (1,10 - 5,60)	4,60 (1,10 - 7,00)	5,60 (1,10 - 7,20)	6,80 (1,60 - 8,30)	8,50 (3,30 - 10,40)	8,50 (3,00 - 10,60)	9,40 (4,20 - 10,60)	10,40 (3,40 - 14,50)
Heating capacity at -7 °C		kW	—	—	—	3,95	4,45	4,45	—	—
COP [1]	Nominal (Min - Max)	W/W	4,88 (5,24 - 4,18)	4,79 (5,24 - 3,91)	4,63 (5,24 - 4,00)	4,63 (5,00 - 3,82)	3,95 (5,32 - 3,64)	4,47 (5,17 - 3,96)	4,63 (6,00 - 3,46)	4,84 (6,42 - 3,42)
SCOP [2]			**4,60 A++**	**4,60 A++**	**4,60 A++**	**4,20 A+**	**4,20 A+**	**4,20 A+**	**4,70 A++**	**4,68 A++**
Pdesign at -10 °C		kW	3,20	3,50	4,20	5,00	5,20	5,80	6,80	8,50
Input power heating	Nominal (Min - Max)	kW	0,86 (0,21 - 1,34)	0,96 (0,21 - 1,79)	1,21 (0,21 - 1,80)	1,47 (0,32 - 2,17)	2,15 (0,62 - 2,86)	1,90 (0,58 - 2,68)	2,03 (0,70 - 3,06)	2,15 (0,53 - 4,24)
Annual energy consumption [3]		kWh/a	974	1065	1278	1667	1733	1933	2026	2543
Current	Cool / Heat	A	3,35 / 4,00	4,15 / 4,45	5,35 / 5,50	5,00 / 6,70	8,40 / 9,70	7,00 / 8,60	9,50 / 9,50	10,50 / 10,10
Power source		V	230	230	230	230	230	230	230	230
Recommended fuse		A	16	16	16	16	16	20	20	25
Recommended power cable section		mm²	2,5	2,5	2,5	2,5	2,5	2,5	2,5	3,5
Sound pressure [4]	Cool / Heat (Hi)	dB(A)	48 / 50	48 / 50	50 / 52	47 / 48	51 / 52	49 / 50	51 / 52	53 / 54
Dimension [5]	H x W x D	mm	619 x 824 x 299	619 x 824 x 299	619 x 824 x 299	795 x 875 x 320	795 x 875 x 320	795 x 875 x 320	999 x 940 x 340	999 x 940 x 340
Net weight		kg	39	39	39	71	71	72	80	81
Piping connections	Liquid pipe	Inch (mm)	1/4 (6,35)	1/4 (6,35)	1/4 (6,35)	1/4 (6,35)	1/4 (6,35)	1/4 (6,35)	1/4 (6,35)	1/4 (6,35)
	Gas pipe	Inch (mm)	3/8 (9,52)	3/8 (9,52)	3/8 (9,52)	3/8 (9,52)	3/8 (9,52)	3/8 (9,52)	3/8 (9,52)	3/8 (9,52)
Pipe length range total [6]		m	6 ~ 30	6 ~ 30	6 ~ 30	6 ~ 50	6 ~ 60	6 ~ 60	6 ~ 70	6 ~ 80
Pipe length range to one unit		m	3 ~ 20	3 ~ 20	3 ~ 20	3 ~ 25	3 ~ 25	3 ~ 25	3 ~ 25	3 ~ 25
Elevation difference (in/out)		m	10	10	10	15	15	15	15	15
Pipe length for additional gas		m	20	20	20	30	30	30	45	45
Additional gas amount		g/m	15	15	15	20	20	20	20	20
Refrigerant (R32) / CO_2 Eq.		kg / T	1,12 / 0,756	1,12 / 0,756	1,12 / 0,756	2,10 / 1,418	2,10 / 1,418	2,10 / 1,418	2,72 / 1,836	2,72 / 1,836
Operating range	Cool Min ~ Max	°C	-10 ~ +46	-10 ~ +46	-10 ~ +46	-10 ~ +46	-10 ~ +46	-10 ~ +46	-10 ~ +46	-10 ~ +46
	Heat Min ~ Max	°C	-15 ~ +24	-15 ~ +24	-15 ~ +24	-15 ~ +24	-15 ~ +24	-15 ~ +24	-15 ~ +24	-15 ~ +24

1) EER and COP calculation is based in accordance to EN14511. 2) Energy Label Scale from A+++ to D. 3) The annual energy consumption is calculated in accordance to EU/626/2011. 4) The sound pressure of the units shows the value measured of a position 1 m in front and 1 m in rear side of the main body. The sound pressure is measured in accordance with JIS C 9612. 5) Add 70 or 95 mm for piping port. 6) Minimum piping length is 3 meters per indoor unit.

Possible outdoor / indoor units combinations • R32 refrigerant

Rooms	Model	Indoor capacity connected (Min - Max)	Wall-mounted Etherea Silver								Wall-mounted Etherea Pure White Matt								NEW Wall-mounted TZ super-compact								Floor Console*								4 Way 60x60 Cassette								Low Static Pressure Hide Away							
			16	20	25	35	42	50	60	71	16	20	25	35	42	50	60	71	16	20	25	35	42	50	60	71	16	20	25	35	42	50	60	71	16	20	25	35	42	50	60	71	16	20	25	35	42	50	60	71
2	CU-2Z35TBE	3,2 ~ 6,0 kW	✔	✔	✔						✔	✔	✔	✔					✔	✔	✔	✔					✔	✔	✔						✔	✔	✔						✔	✔	✔					
	CU-2Z41TBE	3,2 ~ 6,0 kW	✔	✔	✔						✔	✔	✔	✔					✔	✔	✔	✔					✔	✔	✔						✔	✔	✔						✔	✔	✔					
	CU-2Z50TBE	3,2 ~ 7,7 kW	✔	✔	✔	✔	✔				✔	✔	✔	✔	✔	✔			✔	✔	✔	✔	✔	✔			✔	✔	✔		✔				✔	✔	✔		✔				✔	✔	✔		✔			
3	CU-3Z52TBE	4,5 ~ 9,5 kW	✔	✔	✔	✔	✔				✔	✔	✔	✔	✔	✔			✔	✔	✔	✔	✔	✔											✔	✔	✔		✔				✔	✔	✔		✔			
	CU-3Z68TBE	4,5 ~ 11,2 kW	✔	✔	✔	✔	✔				✔	✔	✔	✔	✔	✔			✔	✔	✔	✔	✔	✔	✔										✔	✔	✔		✔	✔			✔	✔	✔		✔	✔		
4	CU-4Z68TBE	4,5 ~ 11,5 kW	✔	✔	✔	✔	✔				✔	✔	✔	✔	✔	✔			✔	✔	✔	✔	✔	✔	✔	✔									✔	✔	✔		✔	✔			✔	✔	✔		✔	✔		
	CU-4Z80TBE	4,5 ~ 14,7 kW	✔	✔	✔	✔	✔				✔	✔	✔	✔	✔	✔	✔	✔	✔	✔	✔	✔	✔	✔	✔	✔									✔	✔	✔		✔	✔			✔	✔	✔		✔	✔		
5	CU-5Z90TBE	4,5 ~ 18,3 kW	✔	✔	✔	✔	✔				✔	✔	✔	✔	✔	✔	✔	✔	✔	✔	✔	✔	✔	✔	✔	✔									✔	✔	✔		✔	✔			✔	✔	✔		✔	✔		

* Compatible only with 2 ports R32 outdoor CU-2Z35TBE / CU-2Z41TBE / CU-2Z50TBE. Minimum quantity of connection: 2 indoor units. Floor console indoor unit is compatible with R410A outdoors with 3, 4 or 5 ports: CU-3E18PBE, CU-3E23SBE, CU-4E23PBE, CU-4E27PBE and CU-5E34PBE.

Outdoor Multi combination model

		Model
CS-MZ16VKE / CS-MTZ16WKE CS-XZ20VKEW / CS-Z20VKEW / CS-TZ20WKEW / CS-MZ20UFEA / CS-MZ20UB4EA / CS-MZ20UD3EA CS-XZ25VKEW / CS-Z25VKEW / CS-TZ25WKEW / CS-Z25UFEAW / CS-Z25UB4EAW / CS-Z25UD3EAW CS-XZ35VKEW / CS-Z35VKEW / CS-TZ35WKEW / CS-Z35UFEAW / CS-Z35UB4EAW / CS-Z35UD3EAW	CU-2Z35TBE / CU-2Z41TBE / CU-2Z50TBE / CU-3Z52TBE / CU-3Z68TBE / CU-4Z68TBE / CU-4Z80TBE / CU-5Z90TBE	—
CS-Z42VKEW / CS-TZ42WKEW CS-XZ50VKEW / CS-Z50VKEW / CS-TZ50WKEW / CS-Z50UFEAW / CS-Z50UB4EAW / CS-Z50UD3EAW	CU-2Z50TBE / CU-3Z52TBE / CU-3Z68TBE / CU-4Z68TBE / CU-4Z80TBE / CU-5Z90TBE	CZ-MA1P
CS-TZ60WKEW / CS-Z60UB4EAW / CS-Z60UD3EAW	CU-3Z68TBE / CU-4Z68TBE / CU-4Z80TBE / CU-5Z90TBE	CZ-MA2P
CS-Z71VKEW / CS-TZ71WKEW	CU-4Z80TBE / CU-5Z90TBE	CZ-MA2P / CZ-MA3P

CZ-RD514C
Optional wired remote controller.

INTERNET CONTROL: Built-in WLAN.

Wall-mounted Etherea	Indoor unit Silver	Indoor unit Pure White Matt	Cooling capacity	Heating capacity	Connection in. / out.	Sound pressure [1]	Dimension / Net weight	Piping connections
						Cool — Heat (Hi/Lo/S-Lo)	H x W x D	Liquid / Gas pipe
			kW	kW	mm²	dB(A)	mm / kg	Inch (mm)
1,6 kW	—	CS-MZ16VKE	1,60	2,60	4 x 1,5	38/26/21 — 39/27/21	295 x 919 x 194/9	1/4 (6,35) / 3/8 (9,52)
2,0 kW	CS-XZ20VKEW	CS-Z20VKEW	2,00	3,20	4 x 1,5	39/26/21 — 40/27/21	295 x 919 x 194/9	1/4 (6,35) / 3/8 (9,52)
2,5 kW	CS-XZ25VKEW	CS-Z25VKEW	2,50	3,60	4 x 1,5	41/27/21 — 43/29/21	295 x 919 x 194/10	1/4 (6,35) / 3/8 (9,52)
3,5 kW	CS-XZ35VKEW	CS-Z35VKEW	3,20	4,50	4 x 1,5	44/30/21 — 45/35/21	295 x 919 x 194/10	1/4 (6,35) / 3/8 (9,52)
4,2 kW	—	CS-Z42VKEW	4,00	5,60	4 x 1,5	44/33/27 — 45/37/31	295 x 919 x 194/10	1/4 (6,35) / 1/2 (12,70)
5,0 kW	CS-XZ50VKEW	CS-Z50VKEW	5,00	6,80	4 x 1,5	44/39/32 — 46/39/32	302 x 1120 x 236/12	1/4 (6,35) / 1/2 (12,70)
7,1 kW	—	CS-Z71VKEW	7,10	8,60	—	49/40/32 — 49/40/32	302 x 1120 x 236/13	1/4 (6,35) / 5/8 (15,88)

CZ-RD514C
Optional wired remote controller.

NEW 2020

INTERNET CONTROL: Built-in WLAN.

NEW Wall-mounted TZ super-compact	Indoor unit	Cooling capacity	Heating capacity	Connection in. / out.	Sound pressure [1]	Dimension / Net weight	Piping connections
					Cool — Heat (Hi/Lo/S-Lo)	H x W x D	Liquid / Gas pipe
		kW	kW	mm²	dB(A)	mm / kg	Inch (mm)
1,6 kW*	CS-MTZ16WKE	1,60	2,60	4 x 1,5	38/27/22 — 39/28/24	290 x 779 x 209/8	1/4 (6,35) / 3/8 (9,52)
2,0 kW	CS-TZ20WKEW	2,00	2,70	4 x 1,5	37/25/20 — 38/26/22	290 x 779 x 209/8	1/4 (6,35) / 3/8 (9,52)
2,5 kW	CS-TZ25WKEW	2,50	3,30	4 x 1,5	40/26/20 — 40/27/22	290 x 779 x 209/8	1/4 (6,35) / 3/8 (9,52)
3,5 kW [2]	CS-TZ35WKEW	3,50	4,00	4 x 1,5	42/30/20 — 42/33/22	290 x 779 x 209/8	1/4 (6,35) / 3/8 (9,52)
4,2 kW	CS-TZ42WKEW	4,20	5,00	4 x 1,5	44/31/29 — 44/35/34	290 x 779 x 209/8	1/4 (6,35) / 1/2 (12,70)
5,0 kW	CS-TZ50WKEW	5,00	5,80	4 x 2,5	44/37/33 — 44/37/33	290 x 779 x 209/8	1/4 (6,35) / 1/2 (12,70)
6,0 kW	CS-TZ60WKEW	6,00	7,00	4 x 2,5	45/37/34 — 45/37/34	302 x 1102 x 244/13	1/4 (6,35) / 1/2 (12,70)
7,1 kW	CS-TZ71WKEW	7,10	8,60	4 x 2,5	47/38/35 — 47/38/35	302 x 1102 x 244/13	1/4 (6,35) / 5/8 (15,88)

CZ-RD514C
Optional wired remote controller.

INTERNET CONTROL: Optional.

Floor Console [3]	Indoor unit	Cooling capacity	Heating capacity	Connection in. / out.	Sound pressure [4]	Dimension / Net weight	Piping connections
					Cool — Heat (Hi/Lo/S-Lo)	H x W x D	Liquid / Gas pipe
		kW	kW	mm²	dB(A)	mm / kg	Inch (mm)
2,0 kW	CS-MZ20UFEA	2,00	3,20	4 x 1,5	39/27/22 — 39/27/21	600 x 750 x 207/13	1/4 (6,35) / 3/8 (9,52)
2,5 kW	CS-Z25UFEAW	2,50	3,60	4 x 1,5	40/27/22 — 40/27/21	600 x 750 x 207/13	1/4 (6,35) / 3/8 (9,52)
3,5 kW [2]	CS-Z35UFEAW	3,50	4,50	4 x 1,5	41/28/22 — 41/28/21	600 x 750 x 207/13	1/4 (6,35) / 3/8 (9,52)
5,0 kW	CS-Z50UFEAW	5,00	5,30	4 x 1,5	44/33/29 — 48/35/31	600 x 750 x 207/13	1/4 (6,35) / 1/2 (12,70)

CZ-BT20EW
RAL9010 panel for 4 Way 60x60 Cassette (sold separately).

CZ-RD52CP
Optional wired remote controller.

INTERNET CONTROL and BMS CONNECTIVITY: Optional.

4 Way 60x60 Cassette	Indoor unit (Panel CZ-BT20EW)	Cooling capacity	Heating capacity	Connection in. / out.	Sound pressure [6]	Dimension / Net weight		Piping connections
					Cool — Heat (Hi/Lo/S-Lo)	Indoor H x W x D	Panel H x W x D	Liquid / Gas pipe
		kW	kW	mm²	dB(A)	mm / kg	mm / kg	Inch (mm)
2,0 kW	CS-MZ20UB4EA	2,00	3,20	4 x 1,5	35/27/24 — 36/30/27	260 x 575 x 575/18	51 x 700 x 700/2,5	1/4 (6,35) / 3/8 (9,52)
2,5 kW	CS-Z25UB4EAW	2,50	3,60	4 x 1,5	36/27/24 — 37/30/27	260 x 575 x 575/18	51 x 700 x 700/2,5	1/4 (6,35) / 3/8 (9,52)
3,5 kW [2]	CS-Z35UB4EAW	3,50	4,50	4 x 1,5	36/28/25 — 37/30/27	260 x 575 x 575/18	51 x 700 x 700/2,5	1/4 (6,35) / 3/8 (9,52)
5,0 kW [5]	CS-Z50UB4EAW	5,00	6,80	4 x 1,5	39/30/27 — 40/31/28	260 x 575 x 575/18	51 x 700 x 700/2,5	1/4 (6,35) / 1/2 (12,70)
6,0 kW	CS-Z60UB4EAW	6,00	8,50	4 x 1,5	44/34/31 — 45/34/31	260 x 575 x 575/18	51 x 700 x 700/2,5	1/4 (6,35) / 1/2 (12,70)

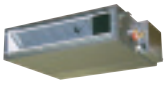

CZ-RL511D
Optional wireless kit.

INTERNET CONTROL and BMS CONNECTIVITY: Optional.

Low Static Pressure Hide Away	Indoor unit	Cooling capacity	Heating capacity	Connection in. / out.	Sound pressure [7]	Dimension / Net weight	Piping connections
					Cool — Heat (Hi/Lo/S-Lo)	H x W x D	Liquid / Gas pipe
		kW	kW	mm²	dB(A)	mm / kg	Inch (mm)
2,0 kW	CS-MZ20UD3EA	2,00	3,20	4 x 1,5	34/29/26 — 36/29/26	200 x 750 x 640/19	1/4 (6,35) / 3/8 (9,52)
2,5 kW	CS-Z25UD3EAW	2,50	3,60	4 x 1,5	35/29/26 — 37/29/26	200 x 750 x 640/19	1/4 (6,35) / 3/8 (9,52)
3,5 kW [2]	CS-Z35UD3EAW	3,50	4,50	4 x 1,5	35/29/26 — 37/29/26	200 x 750 x 640/19	1/4 (6,35) / 3/8 (9,52)
5,0 kW [5]	CS-Z50UD3EAW	5,00	6,80	4 x 1,5	41/31/28 — 41/32/29	200 x 750 x 640/19	1/4 (6,35) / 1/2 (12,70)
6,0 kW	CS-Z60UD3EAW	6,00	8,50	4 x 1,5	43/32/29 — 43/34/31	200 x 750 x 640/19	1/4 (6,35) / 1/2 (12,70)

1) The sound pressure of the indoor unit shows the value measured of a position 1 m in front of the main body and 0,8 m below the unit. The sound pressure is measured in accordance with JIS C 9612. Q-Lo: Quiet mode. Lo: The lowest set fan speed. 2) The heating capacity is 4,2 kW connected to a CU-2Z35TBE. 3) Compatible only with 2 ports R32 outdoor CU-2Z35TBE / CU-2Z41TBE / CU-2Z50TBE. Minimum quantity of connection: 2 indoor units. Floor console indoor unit is compatible with R410A outdoors with 3, 4 or 5 ports: CU-3E18PBE, CU-3E23SBE, CU-4E23PBE, CU-4E27PBE and CU-5E34PBE. 4) The sound pressure of the units shows the value measured of a position 1 m in front of the main body and 1 m above floor. The sound pressure is measured in accordance with JIS C 9612. Q-Lo: Quiet mode. Lo: The lowest set fan speed. 5) The heating capacity is 5,3 kW connected to a CU-2Z50TBE. 6) The sound pressure of the indoor unit shows the value measured of a position 1,5 m below the unit. The sound pressure is measured in accordance with JIS C 9612. Q-Lo: Quiet mode. Lo: The lowest set fan speed. 7) The sound pressure of the indoor unit shows the value measured of a position of 1,5 m below the unit with 1 m duct on the suction side and 2 m duct on the discharge side. The sound pressure is measured in accordance with JIS C 9612. * Tentative data.

Rating Conditions: Cooling Indoor 27°C DB / 19°C WB. Cooling Outdoor 35°C DB / 24°C WB. Heating Indoor 20°C DB. Heating Outdoor 7°C DB / 6°C WB. (DB: Dry Bulb; WB: Wet Bulb).
Specifications subject to change without notice. For detailed information about ErP / Energy Labelling, please visit our websites www.aircon.panasonic.eu or www.ptc.panasonic.eu.

INTERNET CONTROL: Built-in WLAN.

Wall-mounted Etherea Multi Split Inverter+ • R32 refrigerant

			Day and Night				
Rooms			**2 Rooms**			**3 Rooms**	
Kit Silver			**KIT-2XZ2525-TBE**	**KIT-2XZ2035-TBE**	**KIT-2XZ2535-TBE**	**KIT-3XZ202035-TBE**	**KIT-3XZ252535-TBE**
Indoor unit Silver			**CS-XZ25VKEW** **CS-XZ25VKEW**	**CS-XZ35VKEW** **CS-XZ20VKEW**	**CS-XZ35VKEW** **CS-XZ25VKEW**	**CS-XZ35VKEW** **CS-XZ20VKEW** **CS-XZ20VKEW**	**CS-XZ35VKEW** **CS-XZ25VKEW** **CS-XZ25VKEW**
Kit Pure White Matt			**KIT-2Z2525-TBE**	**KIT-2Z2035-TBE**	**KIT-2Z2535-TBE**	**KIT-3Z202035-TBE**	**KIT-3Z252535-TBE**
Indoor unit Pure White Matt			**CS-Z25VKEW** **CS-Z25VKEW**	**CS-Z35VKEW** **CS-Z20VKEW**	**CS-Z35VKEW** **CS-Z25VKEW**	**CS-Z35VKEW** **CS-Z20VKEW** **CS-Z20VKEW**	**CS-Z35VKEW** **CS-Z25VKEW** **CS-Z25VKEW**
Outdoor unit			**CU-2Z41TBE**	**CU-2Z41TBE**	**CU-2Z41TBE**	**CU-3Z52TBE**	**CU-3Z52TBE**
Cooling capacity	Nominal (Min - Max)	kW	2,50 (1,10 - 3,50)	4,10 (1,50 - 5,20)	4,10 (1,50 - 5,20)	5,20 (1,80 - 7,30)	5,20 (1,80 - 7,30)
EER		W/W	3,73	4,56	4,56	4,48	4,48
SEER							
Heating capacity	Nominal (Min - Max)	kW	3,60 (0,70 - 5,50)	4,60 (1,10 - 7,00)	4,60 (1,10 - 7,00)	6,80 (1,60 - 8,30)	6,80 (1,60 - 8,30)
COP		W/W	3,50	4,84	4,84	4,79	4,79
SCOP							
Indoor dimension	(H x W x D)	mm	295 x 919 x 194	295 x 919 x 194	295 x 919 x 194	295 x 919 x 194	295 x 919 x 194
Indoor net weight		kg	10	10 (9 for Z20)	10	10 (9 for Z20)	10

			Simultaneous				
Rooms			**2 Rooms**			**3 Rooms**	
Kit Silver			**KIT-2XZ2525-VKE**	**KIT-2XZ2035-VKE**	**KIT-2XZ2535-VKE**	**KIT-3XZ202035-VKE**	**KIT-3XZ252535-VKE**
Indoor unit Silver			**CS-XZ25VKEW** **CS-XZ25VKEW**	**CS-XZ35VKEW** **CS-XZ20VKEW**	**CS-XZ35VKEW** **CS-XZ25VKEW**	**CS-XZ35VKEW** **CS-XZ20VKEW** **CS-XZ20VKEW**	**CS-XZ35VKEW** **CS-XZ25VKEW** **CS-XZ25VKEW**
Kit Pure White Matt			**KIT-2Z2525-VKE**	**KIT-2Z2035-VKE**	**KIT-2Z2535-VKE**	**KIT-3Z202035-VKE**	**KIT-3Z252535-VKE**
Indoor unit Pure White Matt			**CS-Z25VKEW** **CS-Z25VKEW**	**CS-Z35VKEW** **CS-Z20VKEW**	**CS-Z35VKEW** **CS-Z25VKEW**	**CS-Z35VKEW** **CS-Z20VKEW** **CS-Z20VKEW**	**CS-Z35VKEW** **CS-Z25VKEW** **CS-Z25VKEW**
Outdoor unit			**CU-2Z50TBE**	**CU-2Z50TBE**	**CU-2Z50TBE**	**CU-3Z68TBE**	**CU-3Z68TBE**
Cooling capacity	Nominal (Min - Max)	kW	5,00 (1,50 - 5,40)	5,00 (1,50 - 5,40)	5,00 (1,50 - 5,40)	6,80 (1,90 - 8,00)	6,80 (1,90 - 8,00)
EER		W/W	4,24	4,24	4,24	3,56	3,56
SEER			**8,50 A+++**				
Heating capacity	Nominal (Min - Max)	kW	5,60 (1,10 - 7,20)	5,40 (1,10 - 7,20)	5,40 (1,10 - 7,20)	8,50 (3,30 - 10,40)	8,50 (3,30 - 10,40)
COP		W/W	4,63	4,63	4,63	4,09	4,09
SCOP			**4,60 A++**				
Indoor dimension	(H x W x D)	mm	295 x 919 x 194	295 x 919 x 194	295 x 919 x 194	295 x 919 x 194	295 x 919 x 194
Indoor net weight		kg	10	10 (9 for Z20)	10	10 (9 for Z20)	10

Rating Conditions: Cooling Indoor 27°C DB / 19°C WB. Cooling Outdoor 35°C DB / 24°C WB. Heating Indoor 20°C DB. Heating Outdoor 7°C DB / 6°C WB. (DB: Dry Bulb; WB: Wet Bulb).
Specifications subject to change without notice. For detailed information about ErP / Energy Labelling, please visit our websites www.aircon.panasonic.eu or www.ptc.panasonic.eu.

Feature Comparison

	Models	Wall-mounted Heatcharge VZ • R32 refrigerant	Wall-mounted Etherea • R32 refrigerant	Wall-mounted TZ super-compact • R32 refrigerant	Wall-mounted FZ super-compact • R32 refrigerant
R32	Refrigerant R32	✔	✔	✔	✔
38% ECONAVI	Econavi. Sunlight Sensor	✔			
INVERTER+	Inverter+ system	✔	✔		
INVERTER	Inverter system			✔	✔
R2 ROTARY COMPRESSOR	R2 Rotary Compressor	✔	✔	✔	✔
nanoe X	nanoe X Generator Mark 1	✔ nanoe™	✔		
PM2.5 FILTER	PM2,5 Filter			✔	✔
DUST COLLECTION FILTER	Dust collection filter				
	Antiallergy properties	✔	✔		
TAIKAI	Super Quiet[1]	✔	✔ 19 dB(A) for XZ/Z20, XZ/Z25 and XZ/Z35	✔ 20 dB(A) for TZ20, TZ25 and TZ35	✔ 20 dB(A) for FZ25 and FZ35
HUMIDITY CONTROL MILD DRY	Mild Dry Cooling		✔		
AEROWINGS	Aerowings		✔	✔	✔
-10°C COOLING MODE	Down to -10 °C in cooling only	✔	✔	✔	✔
-15°C HEATING MODE	Down to -15 °C in heating mode	✔ -35 °C[2]	✔	✔	✔
SUMMER HOUSE	Summer House	✔			
R32 R410A R22	R410A/R22 Renewal	✔	✔	✔	✔
	Odour-removing function	✔	✔	✔	✔
	Removable, washable panel	✔	✔	✔	✔
	Powerful mode	✔	✔	✔	✔
	Soft dry operation mode	✔	✔	✔	✔
	Personal airflow creation	✔	✔	✔ For TZ50, TZ60 and TZ71	
	Automatic vertical airflow control			✔ For TZ20, TZ25, TZ35 and TZ42	✔
	Manual horizontal airflow control			✔ For TZ20, TZ25, TZ35 and TZ42	✔
	Auto mode	✔	✔	✔	✔
	Hot start mode	✔	✔	✔	✔
24	Real time clock with dual ON&OFF timer	✔	✔	✔	✔
7	Weekly timer				
	LCD infrared remote controller	✔	✔	✔	✔
	Automatic restart	✔	✔	✔	✔
	Long piping	✔ 15 m	✔ 15 m, 30 m (XZ/Z50, XZ/Z71)	✔ 15 m, 20 m (TZ50), 30 m (TZ71 and TZ60)	✔ 15 m, 30 m (FZ60)
	Top-Panel maintenance access	✔	✔	✔	✔
	Self-diagnosis function	✔	✔	✔	✔
INTEGRATION TO P-LINK	CZ-CAPRA1: RAC interface adapter for integration into P-Link	✔	✔	✔	✔
INTERNET CONTROL	Internet control	✔	✔ Built-in	✔ Built-in	✔
BMS CONNECTIVITY	Easy control by BMS	✔	✔	✔	✔
5 YEARS COMPRESSOR WARRANTY	Warranty on the compressor	✔	✔	✔	✔

1) At the lowest fan speed. 2) Tested by 3rd party laboratory, SP, according to EN14511:2013 and SP Method 1721, this temperature is not guaranteed by Factory.

Wall-mounted Professional -20 °C • R32 refrigerant	Floor Console • R32 refrigerant	4 Way 60x60 Cassette • R32 refrigerant	Low Static Pressure Hide Away • R32 refrigerant
✔	✔	✔	✔
	✔		
✔		✔	✔
✔	✔	✔	✔
	✔		
	✔		
✔ 21 dB(A) for Z25 and Z35	✔ 20 dB(A) for Z25 and Z35	✔ 22 dB(A) for Z25	
✔			
✔ -20 °C	✔	✔	✔
✔	✔	✔	✔
✔	✔	✔	✔
✔	✔	✔	✔
✔	✔		
✔	✔	✔	✔
✔	✔	✔	✔
	✔	✔	
	✔		
✔	✔	✔	✔
✔	✔	✔	✔
	✔	✔	
✔			✔
	✔	✔	
✔	✔	✔	✔
✔ 15 m, 20 m (Z50)	✔ 20 m, 30 m (Z50)	✔ 20 m, 30 m (Z50 and Z60)	✔ 20 m, 30 m (Z50 and Z60)
✔	✔	✔	✔
✔	✔	✔	✔
✔	✔	✔	✔
✔	✔	✔	✔
✔	✔	✔	✔
✔	✔	✔	✔

Features Explained

Energy saving

Domestic Econavi.
Sunlight Sensor technology can detect and reduce the waste of energy by optimising air conditioner operation according to room conditions. With just one touch of a button, you can save energy.

Inverter Plus system.
This classification highlights Panasonic's highest performing systems.

Inverter system.
The Inverter range provides greater efficiency and comfort. Provides more precise temperature control, without highs and lows, and keeps the ambient temperature constant with lower energy consumption and a significant reduction in noise and vibration levels.

R2 Rotary compressor.
Panasonic R2 Rotary Compressor. Designed to withstand extreme conditions, it delivers high performance and efficiency.

Refrigerant R32.
Our heat pumps containing the refrigerant R32 show a drastic reduction in the value of Global Warming Potential (GWP). An important step to reduce greenhouse gases. R32 is also a component refrigerant, making it easy to recycle.

High performance and healthy air

nanoe™ X.
Panasonic's latest innovation nanoe™ X promotes well-being by inhibiting growth of certain harmful viruses and bacteria, as well as deodorising your home.

PM2,5 filter.
Particulate matter (PM2,5) can be found suspended in the air, including dust, dirt, smoke and liquid droplets. Sized at 2,5µm, these particles are said to pose health problems as they can easily enter our lungs.

Dust collection filter.
This filter collects and retains particles suspended in the air, resulting in cleaner air in the room.

Antiallergy properties.
System is equipped with antiallergy properties filter.

Super Quiet.
Thanks to its latest generation compressor and its twin blade fan, our outdoor unit is one of the most silent on the market. The indoor unit emits an almost imperceptible 18 dB(A).

Mild Dry cooling.
Fine control helps prevent a rapid decrease in room humidity while maintaining the set temperature. Maintains an RH* up to 10 % higher than cooling operation (*RH: Relative Humidity). Ideal when sleeping with the air conditioner on.

Aerowings.
More comfort with Aerowings. Direct airflow to the ceiling, creating a shower cooling effect with built-in twin flap.

Down to -10 °C in cooling only mode.
The air conditioner works in cooling mode when the outdoor temperature of -10 °C.

Down to -15 °C in heating mode.
The air conditioner works in heat pump mode when the outdoor temperature is as low as -15 °C.

Summer House.
This innovative function keeps the house at 7/8 °C to avoid freezing pipes during the winter. This function is beneficial for summer or weekend homes.

R22 Renewal.
The Panasonic renewal system allows good quality existing R22 pipe work to be re-used whilst installing new high efficiency R410A systems.

Odour-removing function.
Allows the exchanger to be cleaned, preventing possible odours. While this function is connected, the fan also remains OFF momentarily to avoid unpleasant odours while the exchanger is being cleaned.

Removable, washable panel.
The front panel is easy to keep clean. It can be removed quickly in one single step and can be washed in water. A clean front panel ensures smoother, more efficient operation, which can save energy.

Powerful mode.
The rapid and effective powerful mode is ideal for when you come home on the hottest or coldest days. It works at maximum power to reach the desired temperature in just 15 minutes.

Soft Dry operation mode.
The soft dry mode eliminates excess moisture with a soft breeze and provides a sense of wellbeing without much change in temperature.

Personal airflow creation.
Permits the air direction to be adjusted vertically and horizontally. This feature can be conveniently selected by remote controller.

Automatic vertical airflow control.
The flap swings up and down automatically. The flow can also be set at a fixed angle with the remote controller.

Manual horizontal airflow control.

Auto mode.
Automatically switches the current operation mode to heating or cooling mode necessary to keep the temperature at a constantly comfortable level based on the temperature of the room. In case of Multi Split installation the function is limited to first unit working and logic of switching is different considering also the outdoor temperature.

Hot Start mode.
At the start of heating cycle and after defrost cycle, the indoor fan will start up once the indoor heat exchanger is warm.

Real time clock with dual ON&OFF timer.
This feature enables you to preset two different sets of start/stop operation timer (hour and minute) within a 24-hour time frame.

Weekly timer. Allow to fix per each day of the week up to 6 operations per day.

LCD infrared remote controller.

Automatic restart.
This function permits automatic restarting if safe mode operation has stopped for some unusual reason, such as after a power cut. As soon as the power is back, the unit restarts with the parameters selected before it stopped.

Long piping.
Indicates the maximum length of pipe between the outdoor unit and the indoor unit(s). The distances permitted, demonstrate the installations possible.

Top-panel maintenance access.
Maintenance of an outdoor unit used to be quite a tedious task. Now, with the possibility of removing the top cover, maintenance is quick and easy.

Self-diagnosis function.
With this function the unit carries out a process self-diagnosis when a particular function does not work correctly. This allows faster servicing.

High connectivity

RAC interface adapter for integration into P-Link.
CZ-CNT port integration to PACi and ECOi. Domestic integration to P-Link. Can connect ranges to P-Link. Full control is now possible.

Internet control.
A next generation system providing user-friendly remote control of air conditioning or heat pump units from everywhere, using a simple Android™ or iOS smartphone, tablet or PC via the internet.

Easy control by BMS.
The communication port can be integrated into the indoor unit and provides easy connection to, and control of, your Panasonic heat pump to your home or building management system.

5 Years warranty.
Panasonic guarantees the compressors in the entire range for five years.

Accessories and Control

Optional PCB's for additional functions

CZ-TACG1
Panasonic Comfort Cloud for internet control.

CZ-CAPRA1
RAC interface adapter for integration into P-Link, plus external input and alarm/status output.

PAW-AC-KNX-1i
This interface can be used with all models which have a CN-CNT connector.

PAW-AC-MBS-1
This interface can be used with all models which have a CN-CNT connector.

PAW-AC-BAC-1
This interface can be used with all models which have a CN-CNT connector.

PAW-AC-DIO
This interface can be used with all models which have a CN-RMT connector.

PAW-AC-HEAT-1
Heating only PCB for Etherea, 4 Way 60x60 Cassette and Hide Away.

PAW-SMSCONTROL
Control of the Etherea, Flagship and Heatcharge by SMS (need additional SIM card).

Individual Controls

CZ-RD514C
Wired remote controller for Wall-mounted and Floor Console.

CZ-RD52CP
Wired remote controller for Cassette.

CZ-RL511D
Infrared remote controller Sky Remote. 2 m cable length of infrared receiver for Hide Away.

Panels

CZ-BT20EW
RAL9010 panel for 4 Way 60x60 Cassette.

Free Multi R32 combinations table

Free Multi 2x1 CU-2Z35TBE. Minimum capacity connected: 3,2 kW. Maximum capacity connected: 6,0 kW • R32 refrigerant

Indoor unit capacity	Cooling capacity (kW). Rooms			EER	SEER [1]	Input power rating	A.E.C.	Current	Heating capacity (kW). Rooms			COP	SCOP [1]	Input power rating	A.E.C.	Current
	A	B	Total (Min - Max)	W/W		kW	kWh	230V	A	B	Total (Min - Max)	W/W		kW	kWh	230V
1 Room																
16	1,60		1,60 (1,10 - 2,30)	3,90		0,41 (0,22 - 0,60)	205	1,95	2,60		2,60 (0,70 - 3,80)	3,77		0,69 (0,17 - 1,11)	345	3,20
20	2,00		2,00 (1,10 - 2,90)	3,85		0,52 (0,22 - 0,77)	260	2,45	3,20		3,20 (0,70 - 4,80)	3,76		0,85 (0,17 - 1,41)	425	3,95
25	2,50		2,50 (1,10 - 3,50)	3,73		0,67 (0,22 - 1,00)	335	3,15	3,60		3,60 (0,70 - 5,50)	3,50		1,03 (0,17 - 1,70)	515	4,75
35	3,50		3,50 (1,10 - 4,00)	3,47		1,01 (0,22 - 1,22)	505	4,70	4,20		4,20 (0,70 - 5,60)	3,44		1,22 (0,17 - 1,68)	610	5,65
2 Rooms																
16 + 16	1,60	1,60	3,20 (1,50 - 4,00)	4,92	**8,50 A+++**	0,65 (0,25 - 1,00)	325	3,05	2,10	2,10	4,20 (1,10 - 5,60)	4,88	**4,60 A++**	0,86 (0,21 - 1,34)	430	4,00
16 + 20	1,55	1,95	3,50 (1,50 - 4,50)	4,86	**8,50 A+++**	0,72 (0,25 - 1,10)	360	3,35	1,85	2,35	4,20 (1,10 - 5,60)	4,88	**4,60 A++**	0,86 (0,21 - 1,34)	430	4,00
16 + 25	1,35	2,15	3,50 (1,50 - 4,50)	4,86	**8,50 A+++**	0,72 (0,25 - 1,10)	360	3,35	1,65	2,55	4,20 (1,10 - 5,60)	4,88	**4,60 A++**	0,86 (0,21 - 1,34)	430	4,00
16 + 35	1,10	2,40	3,50 (1,50 - 4,50)	4,86	**8,50 A+++**	0,72 (0,25 - 1,10)	360	3,35	1,30	2,90	4,20 (1,10 - 5,60)	4,88	**4,60 A++**	0,86 (0,21 - 1,34)	430	4,00
20 + 20	1,75	1,75	3,50 (1,50 - 4,50)	4,86	**8,50 A+++**	0,72 (0,25 - 1,10)	360	3,35	2,10	2,10	4,20 (1,10 - 5,60)	4,88	**4,60 A++**	0,86 (0,21 - 1,34)	430	4,00
20 + 25	1,55	1,95	3,50 (1,50 - 4,50)	4,86	**8,50 A+++**	0,72 (0,25 - 1,10)	360	3,35	1,85	2,35	4,20 (1,10 - 5,60)	4,88	**4,60 A++**	0,86 (0,21 - 1,34)	430	4,00
20 + 35	1,25	2,25	3,50 (1,50 - 4,50)	5,07	**8,50 A+++**	0,69 (0,25 - 1,05)	345	3,25	1,55	2,65	4,20 (1,10 - 5,60)	5,00	**4,60 A++**	0,84 (0,21 - 1,29)	420	3,90
25 + 25	1,75	1,75	3,50 (1,50 - 4,50)	5,07	**8,50 A+++**	0,69 (0,25 - 1,05)	345	3,25	2,10	2,10	4,20 (1,10 - 5,60)	5,00	**4,60 A++**	0,84 (0,21 - 1,29)	420	3,90
25 + 35	1,45	2,05	3,50 (1,50 - 4,50)	5,07	**8,50 A+++**	0,69 (0,25 - 1,05)	345	3,25	1,75	2,45	4,20 (1,10 - 5,60)	5,00	**4,60 A++**	0,84 (0,21 - 1,29)	420	3,90

Free Multi 2x1 CU-2Z41TBE. Minimum capacity connected: 3,2 kW. Maximum capacity connected: 6,0 kW • R32 refrigerant

Indoor unit capacity	Cooling capacity (kW). Rooms			EER	SEER [1]	Input power rating	A.E.C.	Current	Heating capacity (kW). Rooms			COP	SCOP [1]	Input power rating	A.E.C.	Current
	A	B	Total (Min - Max)	W/W		kW	kWh	230V	A	B	Total (Min - Max)	W/W		kW	kWh	230V
1 Room																
16	1,60		1,60 (1,10 - 2,30)	3,90		0,41 (0,22 - 0,60)	205	1,95	2,60		2,60 (0,70 - 3,80)	3,77		0,69 (0,17 - 1,11)	345	3,20
20	2,00		2,00 (1,10 - 2,90)	3,85		0,52 (0,22 - 0,77)	260	2,45	3,20		3,20 (0,70 - 4,80)	3,76		0,85 (0,17 - 1,41)	425	3,95
25	2,50		2,50 (1,10 - 3,50)	3,73		0,67 (0,22 - 1,00)	335	3,15	3,60		3,60 (0,70 - 5,50)	3,50		1,03 (0,17 - 1,70)	515	4,75
35	3,50		3,50 (1,10 - 4,00)	3,47		1,01 (0,22 - 1,22)	505	4,70	4,50		4,50 (0,70 - 6,20)	3,60		1,25 (0,17 - 1,81)	625	5,80
2 Rooms																
16 + 16	1,60	1,60	3,20 (1,50 - 4,00)	4,71	**8,50 A+++**	0,68 (0,25 - 0,99)	340	3,15	2,20	2,20	4,40 (1,10 - 7,00)	4,68	**4,60 A++**	0,94 (0,21 - 1,81)	470	4,35
16 + 20	1,60	2,00	3,60 (1,50 - 4,50)	4,62	**8,50 A+++**	0,78 (0,25 - 1,15)	390	3,60	2,05	2,55	4,60 (1,10 - 7,00)	4,79	**4,60 A++**	0,96 (0,21 - 1,79)	480	4,45
16 + 25	1,60	2,50	4,10 (1,50 - 5,20)	4,56	**8,50 A+++**	0,90 (0,25 - 1,37)	450	4,15	1,80	2,80	4,60 (1,10 - 7,00)	4,79	**4,60 A++**	0,96 (0,21 - 1,79)	480	4,45
16 + 35	1,30	2,80	4,10 (1,50 - 5,20)	4,56	**8,50 A+++**	0,90 (0,25 - 1,37)	450	4,15	1,45	3,15	4,60 (1,10 - 7,00)	4,79	**4,60 A++**	0,96 (0,21 - 1,79)	480	4,45
20 + 20	2,00	2,00	4,00 (1,50 - 5,00)	4,49	**8,50 A+++**	0,89 (0,25 - 1,31)	445	4,10	2,30	2,30	4,60 (1,10 - 7,00)	4,84	**4,60 A++**	0,95 (0,21 - 1,77)	475	4,40
20 + 25	1,80	2,30	4,10 (1,50 - 5,20)	4,56	**8,50 A+++**	0,90 (0,25 - 1,37)	450	4,15	2,05	2,55	4,60 (1,10 - 7,00)	4,84	**4,60 A++**	0,95 (0,21 - 1,77)	475	4,40
20 + 35	1,50	2,60	4,10 (1,50 - 5,20)	4,56	**8,50 A+++**	0,90 (0,25 - 1,37)	450	4,15	1,65	2,95	4,60 (1,10 - 7,00)	4,84	**4,60 A++**	0,95 (0,21 - 1,77)	475	4,40
25 + 25	2,05	2,05	4,10 (1,50 - 5,20)	4,56	**8,50 A+++**	0,90 (0,25 - 1,37)	450	4,15	2,30	2,30	4,60 (1,10 - 7,00)	4,84	**4,60 A++**	0,95 (0,21 - 1,77)	475	4,40
25 + 35	1,70	2,40	4,10 (1,50 - 5,20)	4,56	**8,50 A+++**	0,90 (0,25 - 1,37)	450	4,15	1,90	2,70	4,60 (1,10 - 7,00)	4,84	**4,60 A++**	0,95 (0,21 - 1,77)	475	4,40

Free Multi 2x1 CU-2Z50TBE. Minimum capacity connected: 3,2 kW. Maximum capacity connected: 7,7 kW • R32 refrigerant

Indoor unit capacity	Cooling capacity (kW). Rooms			EER	SEER [1]	Input power rating	A.E.C.	Current	Heating capacity (kW). Rooms			COP	SCOP [1]	Input power rating	A.E.C.	Current
	A	B	Total (Min - Max)	W/W		kW	kWh	230V	A	B	Total (Min - Max)	W/W		kW	kWh	230V
1 Room																
16	1,60		1,60 (1,10 - 2,30)	3,90		0,41 (0,22 - 0,60)	205	1,95	2,60		2,60 (0,70 - 3,80)	3,77		0,69 (0,17 - 1,11)	345	3,20
20	2,00		2,00 (1,10 - 2,90)	3,85		0,52 (0,22 - 0,77)	260	2,45	3,20		3,20 (0,70 - 4,80)	3,76		0,85 (0,17 - 1,41)	425	3,95
25	2,50		2,50 (1,10 - 3,50)	3,73		0,67 (0,22 - 1,00)	335	3,15	3,60		3,60 (0,70 - 5,50)	3,50		1,03 (0,17 - 1,70)	515	4,75
35	3,50		3,50 (1,10 - 4,00)	3,47		1,01 (0,22 - 1,22)	505	4,70	4,50		4,50 (0,70 - 6,20)	3,60		1,25 (0,17 - 1,81)	625	5,80
42	4,20		4,20 (1,10 - 4,50)	3,09		1,36 (0,22 - 1,50)	680	6,35	5,00		5,00 (1,10 - 6,40)	3,23		1,55 (0,21 - 2,18)	775	7,15
50	5,00		5,00 (1,20 - 5,10)	2,96		1,69 (0,23 - 1,79)	845	7,80	5,30		5,30 (1,10 - 6,80)	3,23		1,64 (0,21 - 2,29)	820	7,60
2 Rooms																
16 + 16	1,60	1,60	3,20 (1,50 - 4,00)	4,71	**8,50 A+++**	0,68 (0,25 - 0,99)	340	3,15	2,60	2,60	5,20 (1,10 - 7,00)	4,60	**4,60 A++**	1,13 (0,21 - 1,81)	565	5,10
16 + 20	1,60	2,00	3,60 (1,50 - 4,50)	4,62	**8,50 A+++**	0,78 (0,25 - 1,15)	390	3,60	2,40	3,00	5,40 (1,10 - 7,00)	4,58	**4,60 A++**	1,18 (0,21 - 1,79)	590	5,35
16 + 25	1,60	2,50	4,10 (1,50 - 5,20)	4,56	**8,50 A+++**	0,90 (0,25 - 1,37)	450	4,15	2,10	3,30	5,40 (1,10 - 7,00)	4,58	**4,60 A++**	1,18 (0,21 - 1,79)	590	5,35
16 + 35	1,55	3,45	5,00 (1,50 - 5,20)	4,24	**8,50 A+++**	1,18 (0,25 - 1,37)	590	5,35	1,70	3,70	5,40 (1,10 - 7,00)	4,58	**4,60 A++**	1,18 (0,21 - 1,79)	590	5,35
16 + 42	1,40	3,60	5,00 (1,50 - 5,40)	4,24	**8,50 A+++**	1,18 (0,25 - 1,49)	590	5,35	1,55	4,05	5,60 (1,10 - 7,20)	4,63	**4,60 A++**	1,21 (0,21 - 1,80)	605	5,50
16 + 50	1,20	3,80	5,00 (1,50 - 5,40)	4,24	**8,50 A+++**	1,18 (0,25 - 1,49)	590	5,35	1,35	4,25	5,60 (1,10 - 7,20)	4,63	**4,60 A++**	1,21 (0,21 - 1,80)	605	5,50
20 + 20	2,00	2,00	4,00 (1,50 - 5,00)	4,49	**8,50 A+++**	0,89 (0,25 - 1,31)	445	4,10	2,70	2,70	5,40 (1,10 - 7,00)	4,62	**4,60 A++**	1,17 (0,21 - 1,77)	585	5,30
20 + 25	2,00	2,50	4,50 (1,50 - 5,20)	4,37	**8,50 A+++**	1,03 (0,25 - 1,37)	515	4,65	2,40	3,00	5,40 (1,10 - 7,00)	4,62	**4,60 A++**	1,17 (0,21 - 1,77)	585	5,30
20 + 35	1,80	3,20	5,00 (1,50 - 5,40)	4,24	**8,50 A+++**	1,18 (0,25 - 1,49)	590	5,35	2,05	3,55	5,60 (1,10 - 7,20)	4,63	**4,60 A++**	1,21 (0,21 - 1,80)	605	5,50
20 + 42	1,60	3,40	5,00 (1,50 - 5,40)	4,24	**8,50 A+++**	1,18 (0,25 - 1,49)	590	5,35	1,80	3,80	5,60 (1,10 - 7,20)	4,63	**4,60 A++**	1,21 (0,21 - 1,80)	605	5,50
20 + 50	1,45	3,55	5,00 (1,50 - 5,40)	4,24	**8,50 A+++**	1,18 (0,25 - 1,49)	590	5,35	1,60	4,00	5,60 (1,10 - 7,20)	4,63	**4,60 A++**	1,21 (0,21 - 1,80)	605	5,50
25 + 25	2,50	2,50	5,00 (1,50 - 5,40)	4,24	**8,50 A+++**	1,18 (0,25 - 1,49)	590	5,35	2,80	2,80	5,60 (1,10 - 7,20)	4,63	**4,60 A++**	1,21 (0,21 - 1,80)	605	5,50
25 + 35	2,10	2,90	5,00 (1,50 - 5,40)	4,24	**8,50 A+++**	1,18 (0,25 - 1,49)	590	5,35	2,35	3,25	5,60 (1,10 - 7,20)	4,63	**4,60 A++**	1,21 (0,21 - 1,80)	605	5,50
25 + 42	1,85	3,15	5,00 (1,50 - 5,40)	4,24	**8,50 A+++**	1,18 (0,25 - 1,49)	590	5,35	2,10	3,50	5,60 (1,10 - 7,20)	4,63	**4,60 A++**	1,21 (0,21 - 1,80)	605	5,50
25 + 50	1,65	3,35	5,00 (1,50 - 5,40)	4,24	**8,50 A+++**	1,18 (0,25 - 1,49)	590	5,35	1,85	3,75	5,60 (1,10 - 7,20)	4,63	**4,60 A++**	1,21 (0,21 - 1,80)	605	5,50
35 + 35	2,50	2,50	5,00 (1,50 - 5,40)	4,24	**8,50 A+++**	1,18 (0,25 - 1,49)	590	5,35	2,80	2,80	5,60 (1,10 - 7,20)	4,63	**4,60 A++**	1,21 (0,21 - 1,80)	605	5,50
35 + 42	2,25	2,75	5,00 (1,50 - 5,40)	4,24	**8,50 A+++**	1,18 (0,25 - 1,49)	590	5,35	2,55	3,05	5,60 (1,10 - 7,20)	4,63	**4,60 A++**	1,21 (0,21 - 1,80)	605	5,50

1) Energy Label Scale from A+++ to D.

Free Multi 3x1 CU-3Z52TBE. Minimum capacity connected: 4,5 kW. Maximum capacity connected: 9,5 kW • R32 refrigerant

Indoor unit capacity	Cooling capacity (kW). Rooms				EER	SEER [1]	Input power rating	A.E.C.	Current	Heating capacity (kW). Rooms				COP	SCOP [1]	Input power rating	A.E.C.	Current
	A	B	C	Total (Min - Max)	W/W		kW	kWh	230V	A	B	C	Total (Min - Max)	W/W		kW	kWh	230V
1 Room																		
16	1,60			1,60 (1,30 - 2,30)	4,00		0,40 (0,25 - 0,64)	200	2,00	2,60			2,60 (1,20 - 3,20)	4,33		0,60 (0,30 - 0,96)	300	3,00
20	2,00			2,00 (1,80 - 2,90)	4,00		0,50 (0,34 - 0,81)	250	2,50	3,20			3,20 (1,20 - 4,10)	4,32		0,74 (0,30 - 1,23)	370	3,70
25	2,50			2,50 (1,80 - 2,90)	3,97		0,63 (0,34 - 0,81)	315	3,00	3,60			3,60 (1,20 - 4,30)	3,83		0,94 (0,30 - 1,23)	470	4,50
35	3,50			3,50 (1,80 - 3,80)	3,72		0,94 (0,34 - 1,36)	470	4,30	4,50			4,50 (1,20 - 5,80)	3,66		1,23 (0,30 - 2,10)	615	5,80
42	4,20			4,20 (1,80 - 4,30)	3,07		1,37 (0,34 - 1,99)	685	6,10	5,60			5,60 (1,20 - 6,80)	3,26		1,72 (0,30 - 2,93)	860	7,70
50	5,00			5,00 (1,90 - 5,70)	3,23		1,55 (0,34 - 2,13)	775	6,80	6,80			6,80 (1,20 - 6,90)	3,24		2,10 (0,30 - 2,52)	1050	9,20
2 Rooms																		
16 + 16	1,60	1,60		3,20 (1,80 - 6,20)	5,42	**7,00 A++**	0,59 (0,33 - 2,09)	295	2,90	2,60	2,60		5,20 (1,40 - 7,00)	4,13	**3,80 A**	1,26 (0,34 - 1,99)	630	5,80
16 + 20	1,60	2,00		3,60 (1,80 - 6,20)	4,93	**7,00 A++**	0,73 (0,33 - 2,05)	365	3,50	2,58	3,22		5,80 (1,40 - 7,00)	4,03	**3,80 A**	1,44 (0,33 - 1,95)	720	6,60
16 + 25	1,60	2,50		4,10 (1,80 - 6,20)	4,66	**7,00 A++**	0,88 (0,33 - 2,05)	440	4,10	2,42	3,78		6,20 (1,40 - 7,00)	3,95	**3,80 A**	1,57 (0,33 - 1,95)	785	7,20
16 + 35	1,60	3,50		5,10 (1,80 - 6,30)	3,89	**7,00 A++**	1,31 (0,33 - 2,06)	655	6,00	2,13	4,67		6,80 (1,40 - 7,30)	3,89	**3,80 A**	1,75 (0,29 - 2,05)	875	7,90
16 + 42	1,43	3,77		5,20 (1,90 - 6,40)	3,85	**7,00 A++**	1,35 (0,35 - 2,10)	675	6,20	1,88	4,92		6,80 (1,40 - 7,30)	3,98	**3,80 A**	1,71 (0,31 - 2,04)	855	7,80
16 + 50	1,26	3,94		5,20 (1,90 - 6,80)	4,44	**7,20 A++**	1,17 (0,34 - 2,04)	585	5,40	1,65	5,15		6,80 (1,40 - 8,00)	4,36	**4,00 A+**	1,56 (0,27 - 2,15)	780	7,10
20 + 20	2,00	2,00		4,00 (1,80 - 6,20)	4,71	**7,00 A++**	0,85 (0,33 - 2,01)	425	4,00	3,20	3,20		6,40 (1,40 - 7,00)	3,93	**3,80 A**	1,63 (0,32 - 1,95)	815	7,40
20 + 25	2,00	2,50		4,50 (1,80 - 6,20)	4,33	**7,00 A++**	1,04 (0,33 - 2,01)	520	4,80	3,02	3,78		6,80 (1,40 - 7,00)	3,86	**3,80 A**	1,76 (0,29 - 1,95)	880	8,00
20 + 35	1,89	3,31		5,20 (1,80 - 6,30)	3,85	**7,00 A++**	1,35 (0,33 - 2,02)	675	6,20	2,47	4,33		6,80 (1,40 - 7,30)	3,98	**3,80 A**	1,71 (0,28 - 2,04)	855	7,80
20 + 42	1,68	3,52		5,20 (1,90 - 6,40)	3,94	**7,00 A++**	1,32 (0,35 - 2,06)	660	6,00	2,19	4,61		6,80 (1,40 - 7,30)	4,00	**3,80 A**	1,70 (0,30 - 2,00)	850	7,80
20 + 50	1,49	3,71		5,20 (1,90 - 6,80)	4,44	**7,20 A++**	1,17 (0,34 - 2,04)	585	5,40	1,94	4,86		6,80 (1,40 - 8,00)	4,36	**4,00 A+**	1,56 (0,27 - 2,15)	780	7,10
25 + 25	2,50	2,50		5,00 (1,80 - 6,20)	3,91	**7,00 A++**	1,28 (0,33 - 2,01)	640	5,80	3,40	3,40		6,80 (1,40 - 7,00)	3,86	**3,80 A**	1,76 (0,29 - 1,95)	880	8,00
25 + 35	2,17	3,03		5,20 (1,90 - 6,30)	3,85	**7,00 A++**	1,35 (0,35 - 2,02)	675	6,20	2,83	3,97		6,80 (1,40 - 7,30)	3,98	**3,80 A**	1,71 (0,28 - 2,04)	855	7,80
25 + 42	1,94	3,26		5,20 (1,90 - 6,40)	3,94	**7,00 A++**	1,32 (0,35 - 2,06)	660	6,00	2,54	4,26		6,80 (1,40 - 7,30)	4,00	**3,80 A**	1,70 (0,28 - 2,00)	850	7,80
25 + 50	1,73	3,47		5,20 (1,90 - 6,80)	4,44	**7,20 A++**	1,17 (0,34 - 2,04)	585	5,40	2,27	4,53		6,80 (1,40 - 8,00)	4,36	**4,00 A+**	1,56 (0,24 - 2,15)	780	7,10
35 + 35	2,60	2,60		5,20 (1,90 - 6,40)	4,06	**7,00 A++**	1,28 (0,35 - 2,02)	640	5,80	3,40	3,40		6,80 (1,40 - 7,50)	4,02	**3,80 A**	1,69 (0,27 - 2,06)	845	7,70
35 + 42	2,36	2,84		5,20 (1,90 - 6,50)	4,06	**7,00 A++**	1,28 (0,35 - 2,07)	640	5,80	3,09	3,71		6,80 (1,40 - 7,50)	4,02	**3,80 A**	1,69 (0,26 - 2,06)	845	7,70
35 + 50	2,14	3,06		5,20 (1,90 - 6,90)	4,60	**7,20 A++**	1,13 (0,36 - 2,04)	565	5,20	2,80	4,00		6,80 (1,40 - 8,00)	4,42	**4,00 A+**	1,54 (0,24 - 2,08)	770	7,00
42 + 42	2,60	2,60		5,20 (1,90 - 6,50)	4,06	**7,00 A++**	1,28 (0,35 - 2,07)	640	5,80	3,40	3,40		6,80 (1,40 - 7,60)	4,12	**3,80 A**	1,65 (0,26 - 2,09)	825	7,50
42 + 50	2,37	2,83		5,20 (1,90 - 6,90)	4,60	**7,20 A++**	1,13 (0,36 - 2,04)	565	5,20	3,10	3,70		6,80 (1,40 - 8,00)	4,44	**4,00 A+**	1,53 (0,24 - 2,08)	765	7,00
3 Rooms																		
16 + 16 + 16	1,60	1,60	1,60	4,80 (1,80 - 7,20)	5,05	**8,50 A+++**	0,95 (0,36 - 2,13)	475	4,40	2,26	2,26	2,26	6,78 (1,50 - 8,10)	4,58	**4,20 A+**	1,48 (0,29 - 2,10)	740	6,80
16 + 16 + 20	1,60	1,60	2,00	5,20 (1,80 - 7,30)	4,77	**8,50 A+++**	1,09 (0,36 - 2,18)	545	5,00	2,09	2,09	2,62	6,80 (1,60 - 8,30)	4,63	**4,20 A+**	1,47 (0,32 - 2,17)	735	6,70
16 + 16 + 25	1,46	1,46	2,28	5,20 (1,90 - 7,20)	4,77	**8,50 A+++**	1,09 (0,39 - 2,09)	545	5,00	1,91	1,91	2,98	6,80 (1,60 - 8,30)	4,63	**4,20 A+**	1,47 (0,32 - 2,17)	735	6,70
16 + 16 + 35	1,24	1,24	2,72	5,20 (1,90 - 7,20)	4,77	**8,50 A+++**	1,09 (0,39 - 2,04)	545	5,00	1,62	1,62	3,56	6,80 (1,60 - 8,30)	4,69	**4,20 A+**	1,45 (0,34 - 2,10)	725	6,60
16 + 16 + 42	1,12	1,12	2,96	5,20 (1,80 - 7,30)	4,77	**8,50 A+++**	1,09 (0,39 - 2,09)	545	5,00	1,47	1,47	3,86	6,80 (1,60 - 8,30)	4,69	**4,20 A+**	1,45 (0,31 - 2,10)	725	6,60
16 + 16 + 50	1,01	1,01	3,18	5,20 (1,80 - 7,30)	5,15	**8,50 A+++**	1,01 (0,42 - 1,91)	505	4,70	1,33	1,33	4,14	6,80 (1,60 - 8,30)	5,07	**4,20 A+**	1,34 (0,33 - 1,96)	670	6,10
16 + 20 + 20	1,48	1,86	1,86	5,20 (1,90 - 7,20)	4,77	**8,50 A+++**	1,09 (0,39 - 2,09)	545	5,00	1,94	2,43	2,43	6,80 (1,60 - 8,30)	4,66	**4,20 A+**	1,46 (0,31 - 2,12)	730	6,70
16 + 20 + 25	1,36	1,70	2,14	5,20 (1,90 - 7,20)	4,77	**8,50 A+++**	1,09 (0,39 - 2,09)	545	5,00	1,78	2,23	2,79	6,80 (1,60 - 8,30)	4,66	**4,20 A+**	1,46 (0,31 - 2,12)	730	6,70
16 + 20 + 35	1,17	1,46	2,57	5,20 (1,90 - 7,20)	4,77	**8,50 A+++**	1,09 (0,39 - 2,00)	545	5,00	1,53	1,92	3,35	6,80 (1,60 - 8,30)	4,69	**4,20 A+**	1,45 (0,34 - 2,10)	725	6,60
16 + 20 + 42	1,07	1,33	2,80	5,20 (1,80 - 7,30)	4,77	**8,50 A+++**	1,09 (0,39 - 2,09)	545	5,00	1,39	1,74	3,67	6,80 (1,60 - 8,30)	4,72	**4,20 A+**	1,44 (0,31 - 2,09)	720	6,60
16 + 20 + 50	0,97	1,21	3,02	5,20 (1,80 - 7,30)	5,15	**8,50 A+++**	1,01 (0,42 - 1,86)	505	4,70	1,27	1,58	3,95	6,80 (1,60 - 8,30)	5,11	**4,20 A+**	1,33 (0,34 - 1,95)	665	6,10
16 + 25 + 25	1,26	1,97	1,97	5,20 (1,90 - 7,20)	4,77	**8,50 A+++**	1,09 (0,39 - 2,09)	545	5,00	1,64	2,58	2,58	6,80 (1,60 - 8,30)	4,66	**4,20 A+**	1,46 (0,31 - 2,12)	730	6,70
16 + 25 + 35	1,09	1,71	2,40	5,20 (1,80 - 7,30)	4,77	**8,50 A+++**	1,09 (0,39 - 2,09)	545	5,00	1,43	2,24	3,13	6,80 (1,60 - 8,30)	4,69	**4,20 A+**	1,45 (0,34 - 2,10)	725	6,60
16 + 25 + 42	1,00	1,57	2,63	5,20 (1,80 - 7,30)	4,77	**8,50 A+++**	1,09 (0,39 - 2,09)	545	5,00	1,31	2,05	3,44	6,80 (1,60 - 8,30)	4,72	**4,20 A+**	1,44 (0,31 - 2,09)	720	6,60
16 + 25 + 50	0,91	1,43	2,86	5,20 (1,80 - 7,30)	5,15	**8,50 A+++**	1,01 (0,42 - 1,86)	505	4,70	1,19	1,87	3,74	6,80 (1,60 - 8,30)	5,11	**4,20 A+**	1,33 (0,34 - 1,95)	665	6,10
16 + 35 + 35	0,96	2,12	2,12	5,20 (1,80 - 7,30)	4,95	**8,50 A+++**	1,05 (0,39 - 2,04)	525	4,80	1,26	2,77	2,77	6,80 (1,60 - 8,30)	4,76	**4,20 A+**	1,43 (0,32 - 2,07)	715	6,50
16 + 35 + 42	0,89	1,96	2,35	5,20 (1,80 - 7,30)	4,95	**8,50 A+++**	1,05 (0,39 - 2,04)	525	4,80	1,17	2,56	3,07	6,80 (1,60 - 8,30)	4,79	**4,20 A+**	1,42 (0,32 - 2,06)	710	6,50
20 + 20 + 20	1,73	1,73	1,73	5,19 (1,90 - 7,20)	4,76	**8,50 A+++**	1,09 (0,39 - 2,04)	545	5,00	2,26	2,26	2,26	6,78 (1,60 - 8,30)	4,64	**4,20 A+**	1,46 (0,31 - 2,11)	730	6,70
20 + 20 + 25	1,60	1,60	2,00	5,20 (1,90 - 7,20)	4,77	**8,50 A+++**	1,09 (0,39 - 2,04)	545	5,00	2,09	2,09	2,62	6,80 (1,60 - 8,30)	4,66	**4,20 A+**	1,46 (0,31 - 2,11)	730	6,70
20 + 20 + 35	1,39	1,39	2,42	5,20 (1,90 - 7,20)	4,95	**8,50 A+++**	1,05 (0,39 - 2,00)	525	4,80	1,81	1,81	3,18	6,80 (1,60 - 8,30)	4,72	**4,20 A+**	1,44 (0,34 - 2,09)	720	6,60
20 + 20 + 42	1,27	1,27	2,66	5,20 (1,80 - 7,30)	4,95	**8,50 A+++**	1,05 (0,39 - 2,04)	525	4,80	1,66	1,66	3,48	6,80 (1,60 - 8,30)	4,76	**4,20 A+**	1,43 (0,32 - 2,08)	715	6,50
20 + 20 + 50	1,16	1,16	2,88	5,20 (1,80 - 7,30)	5,15	**8,50 A+++**	1,01 (0,42 - 1,86)	505	4,70	1,51	1,51	3,78	6,80 (1,60 - 8,30)	5,11	**4,20 A+**	1,33 (0,34 - 1,94)	665	6,10
20 + 25 + 25	1,48	1,86	1,86	5,20 (1,90 - 7,20)	4,77	**8,50 A+++**	1,09 (0,39 - 2,04)	545	5,00	1,94	2,43	2,43	6,80 (1,60 - 8,30)	4,66	**4,20 A+**	1,46 (0,31 - 2,11)	730	6,70
20 + 25 + 35	1,29	1,63	2,28	5,20 (1,90 - 7,20)	4,95	**8,50 A+++**	1,05 (0,39 - 2,00)	525	4,80	1,69	2,13	2,98	6,80 (1,60 - 8,30)	4,72	**4,20 A+**	1,44 (0,34 - 2,09)	720	6,60
20 + 25 + 42	1,20	1,49	2,51	5,20 (1,80 - 7,30)	4,95	**8,50 A+++**	1,05 (0,39 - 2,04)	525	4,80	1,56	1,95	3,29	6,80 (1,60 - 8,30)	4,76	**4,20 A+**	1,43 (0,32 - 2,08)	715	6,50
20 + 25 + 50	1,09	1,37	2,74	5,20 (1,80 - 7,30)	5,15	**8,50 A+++**	1,01 (0,42 - 1,86)	505	4,70	1,43	1,79	3,58	6,80 (1,60 - 8,30)	5,11	**4,20 A+**	1,33 (0,34 - 1,94)	665	6,10
20 + 35 + 35	1,16	2,02	2,02	5,20 (1,80 - 7,30)	4,95	**8,50 A+++**	1,05 (0,39 - 2,00)	525	4,80	1,52	2,64	2,64	6,80 (1,60 - 8,30)	4,79	**4,20 A+**	1,42 (0,32 - 2,06)	710	6,50
25 + 25 + 25	1,73	1,73	1,73	5,19 (1,90 - 7,20)	4,76	**8,50 A+++**	1,09 (0,39 - 2,04)	545	5,00	2,26	2,26	2,26	6,78 (1,60 - 8,30)	4,64	**4,20 A+**	1,46 (0,31 - 2,11)	730	6,70
25 + 25 + 35	1,53	1,53	2,14	5,20 (1,90 - 7,20)	4,95	**8,50 A+++**	1,05 (0,39 - 2,00)	525	4,80	2,00	2,00	2,80	6,80 (1,60 - 8,30)	4,72	**4,20 A+**	1,44 (0,31 - 2,09)	720	6,60
25 + 25 + 42	1,41	1,41	2,38	5,20 (1,80 - 7,30)	4,95	**8,50 A+++**	1,05 (0,39 - 2,04)	525	4,80	1,85	1,85	3,10	6,80 (1,60 - 8,30)	4,76	**4,20 A+**	1,43 (0,68 - 2,08)	715	6,50
25 + 35 + 35	1,36	1,92	1,92	5,20 (1,80 - 7,30)	4,95	**8,50 A+++**	1,05 (0,39 - 2,00)	525	4,80	1,78	2,51	2,51	6,80 (1,60 - 8,30)	4,79	**4,20 A+**	1,42 (0,68 - 2,06)	710	6,50

1) Energy Label Scale from A+++ to D.

Rating Conditions: Cooling Indoor 27°C DB / 19°C WB. Cooling Outdoor 35°C DB / 24°C WB. Heating Indoor 20°C DB. Heating Outdoor 7°C DB / 6°C WB. (DB: Dry Bulb; WB: Wet Bulb).
Specifications subject to change without notice. For detailed information about ErP / Energy Labelling, please visit our websites www.aircon.panasonic.eu or www.ptc.panasonic.eu.

Free Multi R32 combinations table

Free Multi 3x1 CU-3Z68TBE. Minimum capacity connected: 4,5 kW. Maximum capacity connected: 11,2 kW • R32 refrigerant

Indoor unit capacity	Cooling capacity (kW). Rooms				EER	SEER [1]	Input power rating	A.E.C.	Current	Heating capacity (kW). Rooms				COP	SCOP [1]	Input power rating	A.E.C.	Current
	A	B	C	Total (Min - Max)	W/W		kW	kWh	230V	A	B	C	Total (Min - Max)	W/W		kW	kWh	230V
1 Room																		
16	1,60			1,60 (1,30 - 2,30)	4,00		0,40 (0,25 - 0,64)	200	2,00	2,60			2,60 (1,20 - 3,20)	4,33		0,60 (0,30 - 0,96)	300	3,00
20	2,00			2,00 (1,80 - 2,90)	4,00		0,50 (0,34 - 0,81)	250	2,50	3,20			3,20 (1,20 - 4,10)	4,32		0,74 (0,30 - 1,23)	370	3,70
25	2,50			2,50 (1,80 - 2,90)	3,97		0,63 (0,34 - 0,81)	315	3,20	3,60			3,60 (1,20 - 4,30)	3,83		0,94 (0,30 - 1,23)	470	4,70
35	3,50			3,50 (1,80 - 3,80)	3,72		0,94 (0,34 - 1,36)	470	4,50	4,50			4,50 (1,20 - 5,80)	3,66		1,23 (0,30 - 2,10)	615	6,00
42	4,20			4,20 (1,80 - 4,30)	3,07		1,37 (0,34 - 1,99)	685	6,40	5,60			5,60 (1,20 - 6,80)	3,26		1,72 (0,30 - 2,93)	860	8,00
50	5,00			5,00 (1,90 - 5,70)	3,23		1,55 (0,34 - 2,13)	775	7,20	6,80			6,80 (1,20 - 6,90)	3,24		2,10 (0,30 - 2,52)	1050	9,70
60	6,00			6,00 (1,90 - 6,20)	2,96		2,03 (0,34 - 2,33)	1015	9,20	8,50			8,50 (1,30 - 9,00)	3,54		2,40 (0,62 - 2,55)	1200	11,10
2 Rooms																		
16 + 16	1,60	1,60		3,20 (1,90 - 6,40)	5,71	**6,10 A++**	0,56 (0,27 - 2,12)	280	2,80	2,60	2,60		5,20 (2,70 - 9,80)	4,00	**3,80 A**	1,30 (0,66 - 3,01)	650	5,90
16 + 20	1,60	2,00		3,60 (1,90 - 6,40)	5,22	**6,10 A++**	0,69 (0,27 - 2,08)	345	3,40	2,58	3,22		5,80 (2,70 - 9,80)	3,92	**3,80 A**	1,48 (0,65 - 3,02)	740	6,80
16 + 25	1,60	2,50		4,10 (1,90 - 6,40)	4,94	**6,10 A++**	0,83 (0,27 - 2,08)	415	3,90	2,42	3,78		6,20 (2,70 - 9,80)	3,85	**3,80 A**	1,61 (0,65 - 3,02)	805	7,40
16 + 35	1,60	3,50		5,10 (1,90 - 6,90)	4,08	**6,10 A++**	1,25 (0,27 - 2,48)	625	5,70	2,23	4,87		7,10 (2,70 - 9,90)	3,74	**3,80 A**	1,90 (0,63 - 3,02)	950	8,60
16 + 42	1,60	4,20		5,80 (1,90 - 6,90)	3,60	**6,10 A++**	1,61 (0,27 - 2,44)	805	7,40	2,26	5,94		8,20 (2,70 - 9,90)	3,52	**3,80 A**	2,33 (0,63 - 3,02)	1165	10,50
16 + 50	1,60	5,00		6,60 (2,00 - 7,50)	3,63	**6,50 A++**	1,82 (0,28 - 2,52)	910	8,20	2,06	6,44		8,50 (2,80 - 10,20)	3,76	**3,80 A**	2,26 (0,56 - 2,99)	1130	10,20
16 + 60	1,43	5,37		6,80 (2,00 - 7,50)	3,49	**6,50 A++**	1,95 (0,28 - 2,52)	975	8,80	1,79	6,71		8,50 (2,80 - 10,20)	3,76	**3,80 A**	2,26 (0,56 - 2,99)	1130	10,20
20 + 20	2,00	2,00		4,00 (1,90 - 6,40)	5,00	**6,10 A++**	0,80 (0,27 - 2,04)	400	3,80	3,20	3,20		6,40 (2,70 - 9,80)	3,83	**3,80 A**	1,67 (0,64 - 3,02)	835	7,60
20 + 25	2,00	2,50		4,50 (1,90 - 6,40)	4,59	**6,10 A++**	0,98 (0,27 - 2,04)	490	4,60	3,02	3,78		6,80 (2,70 - 9,80)	3,78	**3,80 A**	1,80 (0,64 - 3,02)	900	8,10
20 + 35	2,00	3,50		5,50 (1,90 - 6,90)	3,85	**6,10 A++**	1,43 (0,27 - 2,44)	715	6,50	2,80	4,90		7,70 (2,70 - 9,90)	3,65	**3,80 A**	2,11 (0,63 - 3,02)	1055	9,50
20 + 42	2,00	4,20		6,20 (1,90 - 6,90)	3,35	**6,10 A++**	1,85 (0,27 - 2,40)	925	8,40	2,74	5,76		8,50 (2,70 - 9,90)	3,48	**3,80 A**	2,44 (0,62 - 3,03)	1220	11,00
20 + 50	1,94	4,86		6,80 (2,00 - 7,50)	3,49	**6,50 A++**	1,95 (0,28 - 2,48)	975	8,80	2,43	6,07		8,50 (2,80 - 10,20)	3,76	**3,80 A**	2,26 (0,56 - 2,99)	1130	10,20
20 + 60	1,70	5,10		6,80 (2,00 - 7,50)	3,49	**6,50 A++**	1,95 (0,28 - 2,48)	975	8,80	2,12	6,38		8,50 (2,80 - 10,20)	3,76	**3,80 A**	2,26 (0,56 - 2,99)	1130	10,20
25 + 25	2,50	2,50		5,00 (1,90 - 6,80)	4,13	**6,10 A++**	1,21 (0,27 - 2,43)	605	5,60	3,60	3,60		7,20 (2,70 - 9,80)	3,71	**3,80 A**	1,94 (0,64 - 3,02)	970	8,80
25 + 35	2,50	3,50		6,00 (1,90 - 6,90)	3,47	**6,10 A++**	1,73 (0,27 - 2,44)	865	7,90	3,37	4,73		8,10 (2,70 - 9,90)	3,60	**3,80 A**	2,25 (0,63 - 3,02)	1125	10,20
25 + 42	2,50	4,20		6,70 (1,90 - 6,90)	2,94	**6,10 A++**	2,28 (0,27 - 2,40)	1140	10,30	3,17	5,33		8,50 (2,70 - 9,90)	3,48	**3,80 A**	2,44 (0,62 - 3,03)	1220	11,00
25 + 50	2,27	4,53		6,80 (1,90 - 7,50)	3,49	**6,50 A++**	1,95 (0,26 - 2,48)	975	8,80	2,83	5,67		8,50 (2,80 - 10,20)	3,76	**3,80 A**	2,26 (0,56 - 2,99)	1130	10,20
25 + 60	2,00	4,80		6,80 (1,90 - 7,50)	3,49	**6,50 A++**	1,95 (0,26 - 2,48)	975	8,80	2,50	6,00		8,50 (2,80 - 10,20)	3,76	**3,80 A**	2,26 (0,56 - 2,99)	1130	10,20
35 + 35	3,40	3,40		6,80 (1,90 - 7,00)	2,97	**6,10 A++**	2,29 (0,27 - 2,40)	1145	10,40	4,25	4,25		8,50 (2,80 - 10,00)	3,56	**3,80 A**	2,39 (0,64 - 3,02)	1195	10,80
35 + 42	3,09	3,71		6,80 (1,90 - 7,10)	3,04	**6,10 A++**	2,24 (0,27 - 2,50)	1120	10,10	3,86	4,64		8,50 (2,80 - 10,00)	3,56	**3,80 A**	2,39 (0,60 - 3,02)	1195	10,80
35 + 50	2,80	4,00		6,80 (2,00 - 7,60)	3,64	**6,50 A++**	1,87 (0,28 - 2,48)	935	8,50	3,50	5,00		8,50 (2,80 - 10,30)	3,86	**3,80 A**	2,20 (0,54 - 2,97)	1100	10,00
35 + 60	2,51	4,29		6,80 (2,00 - 7,60)	3,64	**6,50 A++**	1,87 (0,28 - 2,48)	935	8,50	3,13	5,37		8,50 (2,80 - 10,30)	3,86	**3,80 A**	2,20 (0,54 - 2,97)	1100	10,00
42 + 42	3,40	3,40		6,80 (1,90 - 7,10)	3,02	**6,10 A++**	2,25 (0,26 - 2,45)	1125	10,20	4,25	4,25		8,50 (2,80 - 10,00)	3,57	**3,80 A**	2,38 (0,60 - 2,98)	1190	10,80
42 + 50	3,10	3,70		6,80 (2,00 - 7,60)	3,64	**6,50 A++**	1,87 (0,28 - 2,44)	935	8,50	3,88	4,62		8,50 (2,80 - 10,30)	3,88	**3,80 A**	2,19 (0,54 - 2,96)	1095	9,90
42 + 60	2,80	4,00		6,80 (2,00 - 7,60)	3,64	**6,50 A++**	1,87 (0,28 - 2,44)	935	8,50	3,50	5,00		8,50 (2,80 - 10,30)	3,88	**3,80 A**	2,19 (0,54 - 2,96)	1095	9,90
50 + 50	3,40	3,40		6,80 (2,10 - 8,10)	4,10	**6,50 A++**	1,66 (0,32 - 2,50)	830	7,60	4,25	4,25		8,50 (2,80 - 10,50)	4,15	**3,80 A**	2,05 (0,51 - 2,87)	1025	9,30
50 + 60	3,09	3,71		6,80 (2,10 - 8,10)	4,10	**6,50 A++**	1,66 (0,32 - 2,50)	830	7,60	3,86	4,64		8,50 (2,80 - 10,50)	4,15	**3,80 A**	2,05 (0,51 - 2,87)	1025	9,30
3 Rooms																		
16 + 16 + 16	1,60	1,60	1,60	4,80 (1,90 - 8,00)	4,85	**8,00 A++**	0,99 (0,27 - 2,50)	495	4,60	2,60	2,60	2,60	7,80 (3,30 - 10,40)	3,98	**4,20 A+**	1,96 (0,64 - 2,95)	980	8,90
16 + 16 + 20	1,60	1,60	2,00	5,20 (1,90 - 8,00)	4,60	**8,00 A++**	1,13 (0,27 - 2,46)	565	5,20	2,58	2,58	3,24	8,40 (3,30 - 10,40)	3,84	**4,20 A+**	2,19 (0,64 - 2,94)	1095	9,90
16 + 16 + 25	1,60	1,60	2,50	5,70 (1,90 - 8,00)	4,19	**8,00 A++**	1,36 (0,27 - 2,46)	680	6,20	2,39	2,39	3,72	8,50 (3,30 - 10,40)	3,81	**4,20 A+**	2,23 (0,64 - 2,94)	1115	10,10
16 + 16 + 35	1,60	1,60	3,50	6,70 (1,90 - 8,00)	3,68	**8,00 A++**	1,82 (0,27 - 2,37)	910	8,20	2,03	2,03	4,44	8,50 (3,30 - 10,40)	3,94	**4,20 A+**	2,16 (0,63 - 2,92)	1080	9,80
16 + 16 + 42	1,47	1,47	3,86	6,80 (1,90 - 8,10)	3,66	**8,00 A++**	1,86 (0,27 - 2,46)	930	8,40	1,84	1,84	4,82	8,50 (3,30 - 10,50)	3,95	**4,20 A+**	2,15 (0,62 - 2,95)	1075	9,70
16 + 16 + 50	1,33	1,33	4,14	6,80 (2,00 - 8,50)	3,93	**8,00 A++**	1,73 (0,32 - 2,42)	865	7,90	1,66	1,66	5,18	8,50 (3,20 - 10,60)	4,21	**4,20 A+**	2,02 (0,60 - 2,80)	1010	9,10
16 + 16 + 60	1,18	1,18	4,44	6,80 (2,00 - 8,50)	3,93	**8,00 A++**	1,73 (0,32 - 2,42)	865	7,90	1,48	1,48	5,54	8,50 (3,20 - 10,60)	4,21	**4,20 A+**	2,02 (0,60 - 2,80)	1010	9,10
16 + 20 + 20	1,60	2,00	2,00	5,60 (1,90 - 8,00)	4,38	**8,00 A++**	1,28 (0,27 - 2,46)	640	5,80	2,42	3,04	3,04	8,50 (3,30 - 10,40)	3,83	**4,20 A+**	2,22 (0,63 - 2,93)	1110	10,00
16 + 20 + 25	1,60	2,00	2,50	6,10 (1,90 - 8,00)	4,01	**8,00 A++**	1,52 (0,27 - 2,46)	760	6,90	2,23	2,79	3,48	8,50 (3,30 - 10,40)	3,83	**4,20 A+**	2,22 (0,63 - 2,93)	1110	10,00
16 + 20 + 35	1,53	1,92	3,35	6,80 (1,90 - 8,00)	3,66	**8,00 A++**	1,86 (0,27 - 2,37)	930	8,40	1,92	2,39	4,19	8,50 (3,30 - 10,40)	3,95	**4,20 A+**	2,15 (0,62 - 2,86)	1075	9,70
16 + 20 + 42	1,39	1,74	3,67	6,80 (1,90 - 8,10)	3,66	**8,00 A++**	1,86 (0,27 - 2,42)	930	8,40	1,74	2,18	4,58	8,50 (3,30 - 10,50)	3,95	**4,20 A+**	2,15 (0,62 - 2,90)	1075	9,70
16 + 20 + 50	1,27	1,58	3,95	6,80 (2,00 - 8,50)	4,05	**8,00 A++**	1,68 (0,32 - 2,42)	840	7,70	1,58	1,98	4,94	8,50 (3,20 - 10,60)	4,23	**4,20 A+**	2,01 (0,60 - 2,79)	1005	9,10
16 + 20 + 60	1,13	1,42	4,25	6,80 (2,00 - 8,50)	4,05	**8,00 A++**	1,68 (0,32 - 2,42)	840	7,70	1,42	1,77	5,31	8,50 (3,20 - 10,60)	4,23	**4,20 A+**	2,01 (0,60 - 2,79)	1005	9,10
16 + 25 + 25	1,60	2,50	2,50	6,60 (1,90 - 8,00)	3,73	**8,00 A++**	1,77 (0,27 - 2,46)	885	8,00	2,06	3,22	3,22	8,50 (3,30 - 10,40)	3,83	**4,20 A+**	2,22 (0,63 - 2,93)	1110	10,00
16 + 25 + 35	1,43	2,24	3,13	6,80 (1,90 - 8,00)	3,66	**8,00 A++**	1,86 (0,27 - 2,37)	930	8,40	1,79	2,80	3,91	8,50 (3,30 - 10,40)	3,95	**4,20 A+**	2,15 (0,62 - 2,86)	1075	9,70
16 + 25 + 42	1,31	2,05	3,44	6,80 (1,90 - 8,10)	3,66	**8,00 A++**	1,86 (0,27 - 2,42)	930	8,40	1,64	2,56	4,30	8,50 (3,30 - 10,50)	3,95	**4,20 A+**	2,15 (0,62 - 2,90)	1075	9,70
16 + 25 + 50	1,19	1,87	3,74	6,80 (2,00 - 8,50)	4,05	**8,00 A++**	1,68 (0,32 - 2,42)	840	7,70	1,49	2,34	4,67	8,50 (3,20 - 10,60)	4,23	**4,20 A+**	2,01 (0,60 - 2,79)	1005	9,10
16 + 25 + 60	1,08	1,68	4,04	6,80 (2,00 - 8,50)	4,05	**8,00 A++**	1,68 (0,32 - 2,42)	840	7,70	1,35	2,10	5,05	8,50 (3,20 - 10,60)	4,23	**4,20 A+**	2,01 (0,60 - 2,79)	1005	9,10
16 + 35 + 35	1,26	2,77	2,77	6,80 (1,90 - 8,10)	3,74	**8,00 A++**	1,82 (0,29 - 2,37)	910	8,20	1,58	3,46	3,46	8,50 (3,30 - 10,50)	3,99	**4,20 A+**	2,13 (0,64 - 2,88)	1065	9,60
16 + 35 + 42	1,17	2,56	3,07	6,80 (1,90 - 8,20)	3,74	**8,00 A++**	1,82 (0,29 - 2,42)	910	8,20	1,46	3,20	3,84	8,50 (3,30 - 10,50)	4,01	**4,20 A+**	2,12 (0,64 - 2,87)	1060	9,60
16 + 35 + 50	1,07	2,36	3,37	6,80 (2,00 - 8,50)	4,05	**8,00 A++**	1,68 (0,34 - 2,38)	840	7,70	1,34	2,95	4,21	8,50 (3,20 - 10,60)	4,27	**4,20 A+**	1,99 (0,60 - 2,77)	995	9,00
16 + 35 + 60	0,98	2,14	3,68	6,80 (2,00 - 8,50)	4,05	**8,00 A++**	1,68 (0,34 - 2,38)	840	7,70	1,23	2,68	4,59	8,50 (3,20 - 10,60)	4,27	**4,20 A+**	1,99 (0,60 - 2,77)	995	9,00
16 + 42 + 42	1,08	2,86	2,86	6,80 (1,90 - 8,20)	3,74	**8,00 A++**	1,82 (0,29 - 2,42)	910	8,20	1,36	3,57	3,57	8,50 (3,30 - 10,50)	4,03	**4,20 A+**	2,11 (0,64 - 2,86)	1055	9,50
16 + 42 + 50	1,01	2,64	3,15	6,80 (2,00 - 8,50)	4,05	**8,00 A++**	1,68 (0,34 - 2,33)	840	7,70	1,25	3,31	3,94	8,50 (3,20 - 10,60)	4,29	**4,20 A+**	1,98 (0,60 - 2,76)	990	9,00
20 + 20 + 20	2,00	2,00	2,00	6,00 (1,90 - 8,00)	4,05	**8,00 A++**	1,48 (0,27 - 2,41)	740	6,80	2,83	2,83	2,83	8,49 (3,30 - 10,40)	3,91	**4,20 A+**	2,17 (0,63 - 2,92)	1085	9,80
20 + 20 + 25	2,00	2,00	2,50	6,50 (1,90 - 8,00)	3,76	**8,00 A++**	1,73 (0,27 - 2,41)	865	7,90	2,62	2,62	3,26	8,50 (3,30 - 10,40)	3,92	**4,20 A+**	2,17 (0,63 - 2,92)	1085	9,80
20 + 20 + 35	1,81	1,81	3,18	6,80 (1,90 - 8,00)	3,66	**8,00 A++**	1,86 (0,27 - 2,32)	930	8,40	2,27	2,27	3,96	8,50 (3,30 - 10,40)	3,95	**4,20 A+**	2,15 (0,62 - 2,85)	1075	9,70
20 + 20 + 42	1,66	1,66	3,48	6,80 (1,90 - 8,10)	3,74	**8,00 A++**	1,82 (0,29 - 2,42)	910	8,20	2,07	2,07	4,36	8,50 (3,30 - 10,50)	3,97	**4,20 A+**	2,14 (0,62 - 2,89)	1070	9,70
20 + 20 + 50	1,51	1,51	3,78	6,80 (2,00 - 8,50)	4,05	**8,00 A++**	1,68 (0,34 - 2,38)	840	7,70	1,89	1,89	4,72	8,50 (3,20 - 10,60)	4,25	**4,20 A+**	2,00 (0,60 - 2,78)	1000	9,00
20 + 20 + 60	1,36	1,36	4,08	6,80 (2,00 - 8,50)	4,05	**8,00 A++**	1,68 (0,34 - 2,38)	840	7,70	1,70	1,70	5,10	8,50 (3,20 - 10,60)	4,25	**4,20 A+**	2,00 (0,60 - 2,78)	1000	9,00
20 + 25 + 25	1,94	2,43	2,43	6,80 (1,90 - 8,00)	3,66	**8,00 A++**	1,86 (0,27 - 2,41)	930	8,40	2,42	3,04	3,04	8,50 (3,30 - 10,40)	3,92	**4,20 A+**	2,17 (0,63 - 2,92)	1085	9,80
20 + 25 + 35	1,69	2,13	2,98	6,80 (1,90 - 8,00)	3,66	**8,00 A++**	1,86 (0,27 - 2,32)	930	8,40	2,12	2,66	3,72	8,50 (3,30 - 10,40)	3,95	**4,20 A+**	2,15 (0,62 - 2,85)	1075	9,70
20 + 25 + 42	1,56	1,95	3,29	6,80 (1,90 - 8,10)	3,74	**8,00 A++**	1,82 (0,29 - 2,42)	910	8,20	1,95	2,44	4,11	8,50 (3,30 - 10,50)	3,97	**4,20 A+**	2,14 (0,62 - 2,89)	1070	9,70
20 + 25 + 50	1,43	1,79	3,58	6,80 (2,00 - 8,50)	4,05	**8,00 A++**	1,68 (0,34 - 2,38)	840	7,70	1,79	2,24	4,47	8,50 (3,20 - 10,60)	4,25	**4,20 A+**	2,00 (0,60 - 2,78)	1000	9,00
20 + 25 + 60	1,29	1,62	3,89	6,80 (2,00 - 8,50)	4,05	**8,00 A++**	1,68 (0,34 - 2,38)	840	7,70	1,62	2,02	4,86	8,50 (3,20 - 10,60)	4,25	**4,20 A+**	2,00 (0,60 - 2,78)	1000	9,00
20 + 35 + 35	1,52	2,64	2,64	6,80 (1,90 - 8,10)	3,74	**8,00 A++**	1,82 (0,29 - 2,33)	910	8,20	1,88	3,31	3,31	8,50 (3,30 - 10,50)	4,01	**4,20 A+**	2,12 (0,64 - 2,87)	1060	9,60
20 + 35 + 42	1,40	2,45	2,95	6,80 (1,90 - 8,20)	3,74	**8,00 A++**	1,82 (0,29 - 2,42)	910	8,20	1,75	3,07	3,68	8,50 (3,30 - 10,50)	4,03	**4,20 A+**	2,11 (0,64 - 2,86)	1055	9,50
20 + 35 + 50	1,29	2,27	3,24	6,80 (2,00 - 8,50)	4,05	**8,00 A++**	1,68 (0,34 - 2,33)	840	7,70	1,62	2,83	4,05	8,50 (3,20 - 10,60)	4,29	**4,20 A+**	1,98 (0,60 - 2,76)	990	9,00
20 + 42 + 42	1,30	2,75	2,75	6,80 (1,90 - 8,20)	3,84	**8,00 A++**	1,77 (0,29 - 2,37)	885	8,00	1,64	3,43	3,43	8,50 (3,30 - 10,50)	4,05	**4,20 A+**	2,10 (0,63 - 2,86)	1050	9,50
20 + 42 + 50	1,21	2,55	3,04	6,80 (2,00 - 8,50)	4,05	**8,00 A++**	1,68 (0,34 - 2,33)	840	7,70	1,52	3,19	3,79	8,50 (3,20 - 10,60)	4,31	**4,20 A+**	1,97 (0,62 - 2,75)	985	8,90
25 + 25 + 25	2,26	2,26	2,26	6,78 (1,90 - 8,00)	3,65	**8,00 A++**	1,86 (0,27 - 2,41)	930	8,40	2,83	2,83	2,83	8,49 (3,30 - 10,40)	3,91	**4,20 A+**	2,17 (0,63 - 2,92)	1085	9,80

Free Multi 3x1 CU-3Z68TBE. Minimum capacity connected: 4,5 kW. Maximum capacity connected: 11,2 kW • R32 refrigerant

Indoor unit capacity	Cooling capacity (kW). Rooms				EER	SEER [1]	Input power rating	A.E.C.	Current	Heating capacity (kW). Rooms				COP	SCOP [1]	Input power rating	A.E.C.	Current
	A	B	C	Total (Min - Max)	W/W		kW	kWh	230V	A	B	C	Total (Min - Max)	W/W		kW	kWh	230V
25+25+35	2,00	2,00	2,80	6,80 (1,90 - 8,00)	3,66	**8,00 A++**	1,86 (0,27 - 2,32)	930	8,40	2,50	2,50	3,50	8,50 (3,30 - 10,40)	3,95	**4,20 A+**	2,15 (0,62 - 2,85)	1075	9,70
25+25+42	1,85	1,85	3,10	6,80 (1,90 - 8,10)	3,74	**8,00 A++**	1,82 (0,29 - 2,42)	910	8,20	2,31	2,31	3,88	8,50 (3,30 - 10,50)	3,97	**4,20 A+**	2,14 (0,62 - 2,89)	1070	9,70
25+25+50	1,70	1,70	3,40	6,80 (2,00 - 8,50)	4,05	**8,00 A++**	1,68 (0,34 - 2,38)	840	7,70	2,13	2,13	4,24	8,50 (3,20 - 10,60)	4,25	**4,20 A+**	2,00 (0,60 - 2,78)	1000	9,00
25+25+60	1,55	1,55	3,70	6,80 (2,00 - 8,50)	4,05	**8,00 A++**	1,68 (0,34 - 2,38)	840	7,70	1,93	1,93	4,64	8,50 (3,20 - 10,60)	4,25	**4,20 A+**	2,00 (0,60 - 2,78)	1000	9,00
25+35+35	1,78	2,51	2,51	6,80 (1,90 - 8,10)	3,74	**8,00 A++**	1,82 (0,29 - 2,33)	910	8,20	2,24	3,13	3,13	8,50 (3,30 - 10,50)	4,01	**4,20 A+**	2,12 (0,64 - 2,87)	1060	9,60
25+35+42	1,67	2,33	2,80	6,80 (1,90 - 8,20)	3,74	**8,00 A++**	1,82 (0,29 - 2,42)	910	8,20	2,08	2,92	3,50	8,50 (3,30 - 10,50)	4,03	**4,20 A+**	2,11 (0,64 - 2,86)	1055	9,50
25+35+50	1,55	2,16	3,09	6,80 (2,00 - 8,50)	4,05	**8,00 A++**	1,68 (0,34 - 2,33)	840	7,70	1,93	2,70	3,87	8,50 (3,20 - 10,60)	4,29	**4,20 A+**	1,98 (0,60 - 2,76)	990	9,00
25+42+42	1,56	2,62	2,62	6,80 (1,90 - 8,20)	3,84	**8,00 A++**	1,77 (0,29 - 2,37)	885	8,00	1,94	3,28	3,28	8,50 (3,30 - 10,50)	4,05	**4,20 A+**	2,10 (0,63 - 2,86)	1050	9,50
35+35+35	2,26	2,26	2,26	6,78 (1,90 - 8,20)	3,83	**8,00 A++**	1,77 (0,29 - 2,33)	885	8,00	2,83	2,83	2,83	8,49 (3,30 - 10,50)	4,12	**4,20 A+**	2,06 (0,63 - 2,85)	1030	9,30
35+35+42	2,13	2,13	2,54	6,80 (1,90 - 8,20)	3,84	**8,00 A++**	1,77 (0,29 - 2,33)	885	8,00	2,66	2,66	3,18	8,50 (3,30 - 10,50)	4,15	**4,20 A+**	2,05 (0,63 - 2,80)	1025	9,30

1) Energy Label Scale from A+++ to D.

Free Multi 4x1 CU-4Z68TBE. Minimum capacity connected: 4,5 kW. Maximum capacity connected: 11,5 kW • R32 refrigerant

Indoor unit capacity	Cooling capacity (kW). Rooms					EER	SEER [1]	Input power rating	A.E.C.	Current	Heating capacity (kW). Rooms					COP	SCOP [1]	Input power rating	A.E.C.	Current
	A	B	C	D	Total (Min - Max)	W/W		kW	kWh	230V	A	B	C	D	Total (Min - Max)	W/W		kW	kWh	230V
1 Room																				
16	1,60				1,60 (1,30 - 2,30)	4,00		0,40 (0,25 - 0,64)	200	2,00	2,60				2,60 (1,20 - 3,20)	4,33		0,60 (0,30 - 0,96)	300	3,00
20	2,00				2,00 (1,80 - 2,90)	4,00		0,50 (0,34 - 0,81)	250	2,50	3,20				3,20 (1,20 - 4,10)	4,32		0,74 (0,30 - 1,23)	370	3,70
25	2,50				2,50 (1,80 - 2,90)	3,97		0,63 (0,34 - 0,81)	315	3,20	3,60				3,60 (1,20 - 4,30)	3,83		0,94 (0,30 - 1,23)	470	4,70
35	3,50				3,50 (1,80 - 3,80)	3,72		0,94 (0,34 - 1,36)	470	4,50	4,50				4,50 (1,20 - 5,80)	3,66		1,23 (0,30 - 2,10)	615	6,00
42	4,20				4,20 (1,80 - 4,30)	3,07		1,37 (0,34 - 1,99)	685	6,40	5,60				5,60 (1,20 - 6,80)	3,26		1,72 (0,30 - 2,93)	860	8,00
50	5,00				5,00 (1,90 - 5,70)	3,23		1,55 (0,34 - 2,13)	775	7,20	6,80				6,80 (1,20 - 6,90)	3,24		2,10 (0,30 - 2,52)	1050	9,70
60	6,00				6,00 (1,90 - 6,20)	2,96		2,03 (0,34 - 2,33)	1015	9,20	8,50				8,50 (1,30 - 9,00)	3,54		2,40 (0,62 - 2,55)	1200	11,10
2 Rooms																				
16+16	1,60	1,60			3,20 (1,90 - 6,40)	5,71	**6,10 A++**	0,56 (0,27 - 2,12)	280	2,80	2,60	2,60			5,20 (2,70 - 9,80)	4,00	**3,80 A**	1,30 (0,66 - 3,01)	650	5,90
16+20	1,60	2,00			3,60 (1,90 - 6,40)	5,22	**6,10 A++**	0,69 (0,27 - 2,08)	345	3,40	2,58	3,22			5,80 (2,70 - 9,80)	3,92	**3,80 A**	1,48 (0,65 - 3,02)	740	6,80
16+25	1,60	2,50			4,10 (1,90 - 6,40)	4,94	**6,10 A++**	0,83 (0,27 - 2,08)	415	3,90	2,42	3,78			6,20 (2,70 - 9,80)	3,85	**3,80 A**	1,61 (0,65 - 3,02)	805	7,40
16+35	1,60	3,50			5,10 (1,90 - 6,90)	4,08	**6,10 A++**	1,25 (0,27 - 2,48)	625	5,70	2,23	4,87			7,10 (2,70 - 9,90)	3,74	**3,80 A**	1,90 (0,63 - 3,02)	950	8,60
16+42	1,60	4,20			5,80 (1,90 - 6,90)	3,60	**6,10 A++**	1,61 (0,27 - 2,44)	805	7,40	2,26	5,94			8,20 (2,70 - 9,90)	3,52	**3,80 A**	2,33 (0,63 - 3,02)	1165	10,50
16+50	1,60	5,00			6,60 (2,00 - 7,50)	3,63	**6,50 A++**	1,82 (0,28 - 2,52)	910	8,20	2,06	6,44			8,50 (2,80 - 10,20)	3,76	**3,80 A**	2,26 (0,56 - 2,99)	1130	10,20
16+60	1,43	5,37			6,80 (2,00 - 7,50)	3,49	**6,50 A++**	1,95 (0,28 - 2,52)	975	8,80	1,79	6,71			8,50 (2,80 - 10,20)	3,76	**3,80 A**	2,26 (0,56 - 2,99)	1130	10,20
20+20	2,00	2,00			4,00 (1,90 - 6,40)	5,00	**6,10 A++**	0,80 (0,27 - 2,04)	400	3,80	3,20	3,20			6,40 (2,70 - 9,80)	3,83	**3,80 A**	1,67 (0,64 - 3,02)	835	7,60
20+25	2,00	2,50			4,50 (1,90 - 6,40)	4,59	**6,10 A++**	0,98 (0,27 - 2,04)	490	4,60	3,02	3,78			6,80 (2,70 - 9,80)	3,78	**3,80 A**	1,80 (0,64 - 3,02)	900	8,10
20+35	2,00	3,50			5,50 (1,90 - 6,90)	3,85	**6,10 A++**	1,43 (0,27 - 2,44)	715	6,50	2,80	4,90			7,70 (2,70 - 9,90)	3,65	**3,80 A**	2,11 (0,63 - 3,02)	1055	9,50
20+42	2,00	4,20			6,20 (1,90 - 6,90)	3,35	**6,10 A++**	1,85 (0,27 - 2,40)	925	8,40	2,74	5,76			8,50 (2,70 - 9,90)	3,48	**3,80 A**	2,44 (0,62 - 3,03)	1220	11,00
20+50	1,94	4,86			6,80 (2,00 - 7,50)	3,49	**6,50 A++**	1,95 (0,28 - 2,48)	975	8,80	2,43	6,07			8,50 (2,80 - 10,20)	3,76	**3,80 A**	2,26 (0,56 - 2,99)	1130	10,20
20+60	1,70	5,10			6,80 (2,00 - 7,50)	3,49	**6,50 A++**	1,95 (0,28 - 2,48)	975	8,80	2,12	6,38			8,50 (2,80 - 10,20)	3,76	**3,80 A**	2,26 (0,56 - 2,99)	1130	10,20
25+25	2,50	2,50			5,00 (1,90 - 6,80)	4,13	**6,10 A++**	1,21 (0,27 - 2,43)	605	5,60	3,60	3,60			7,20 (2,70 - 9,80)	3,71	**3,80 A**	1,94 (0,64 - 3,02)	970	8,80
25+35	2,50	3,50			6,00 (1,90 - 6,90)	3,47	**6,10 A++**	1,73 (0,27 - 2,44)	865	7,90	3,37	4,73			8,10 (2,70 - 9,90)	3,60	**3,80 A**	2,25 (0,63 - 3,02)	1125	10,20
25+42	2,50	4,20			6,70 (1,90 - 6,90)	2,94	**6,10 A++**	2,28 (0,27 - 2,40)	1140	10,30	3,17	5,33			8,50 (2,70 - 9,90)	3,48	**3,80 A**	2,44 (0,62 - 3,03)	1220	11,00
25+50	2,27	4,53			6,80 (1,90 - 7,50)	3,49	**6,50 A++**	1,95 (0,26 - 2,48)	975	8,80	2,83	5,67			8,50 (2,80 - 10,20)	3,76	**3,80 A**	2,26 (0,56 - 2,99)	1130	10,20
25+60	2,00	4,80			6,80 (1,90 - 7,50)	3,49	**6,50 A++**	1,95 (0,26 - 2,48)	975	8,80	2,50	6,00			8,50 (2,80 - 10,20)	3,76	**3,80 A**	2,26 (0,56 - 2,99)	1130	10,20
35+35	3,40	3,40			6,80 (1,90 - 7,00)	2,97	**6,10 A++**	2,29 (0,27 - 2,40)	1145	10,40	4,25	4,25			8,50 (2,80 - 10,00)	3,56	**3,80 A**	2,39 (0,64 - 3,02)	1195	10,80
35+42	3,09	3,71			6,80 (1,90 - 7,10)	3,04	**6,10 A++**	2,24 (0,27 - 2,50)	1120	10,10	3,86	4,64			8,50 (2,80 - 10,00)	3,56	**3,80 A**	2,39 (0,60 - 3,02)	1195	10,80
35+50	2,80	4,00			6,80 (2,00 - 7,60)	3,64	**6,50 A++**	1,87 (0,28 - 2,48)	935	8,50	3,50	5,00			8,50 (2,80 - 10,30)	3,86	**3,80 A**	2,20 (0,54 - 2,97)	1100	10,00
35+60	2,51	4,29			6,80 (2,00 - 7,60)	3,64	**6,50 A++**	1,87 (0,28 - 2,48)	935	8,50	3,13	5,37			8,50 (2,80 - 10,30)	3,86	**3,80 A**	2,20 (0,54 - 2,97)	1100	10,00
42+42	3,40	3,40			6,80 (1,90 - 7,10)	3,02	**6,10 A++**	2,25 (0,26 - 2,45)	1125	10,20	4,25	4,25			8,50 (2,80 - 10,00)	3,57	**3,80 A**	2,38 (0,60 - 2,98)	1190	10,80
42+50	3,10	3,70			6,80 (2,00 - 7,60)	3,64	**6,50 A++**	1,87 (0,28 - 2,44)	935	8,50	3,88	4,62			8,50 (2,80 - 10,30)	3,88	**3,80 A**	2,19 (0,54 - 2,96)	1095	9,90
42+60	2,80	4,00			6,80 (2,00 - 7,60)	3,64	**6,50 A++**	1,87 (0,28 - 2,44)	935	8,50	3,50	5,00			8,50 (2,80 - 10,30)	3,88	**3,80 A**	2,19 (0,54 - 2,96)	1095	9,90
50+50	3,40	3,40			6,80 (2,10 - 8,10)	4,10	**6,50 A++**	1,66 (0,32 - 2,50)	830	7,60	4,25	4,25			8,50 (2,80 - 10,50)	4,15	**3,80 A**	2,05 (0,51 - 2,87)	1025	9,30
50+60	3,09	3,71			6,80 (2,10 - 8,10)	4,10	**6,50 A++**	1,66 (0,32 - 2,50)	830	7,60	3,86	4,64			8,50 (2,80 - 10,50)	4,15	**3,80 A**	2,05 (0,51 - 2,87)	1025	9,30
3 Rooms																				
16+16+16	1,60	1,60	1,60		4,80 (1,90 - 8,00)	4,85	**8,00 A++**	0,99 (0,27 - 2,50)	495	4,60	2,60	2,60	2,60		7,80 (3,30 - 10,40)	3,98	**4,00 A+**	1,96 (0,64 - 2,95)	980	8,90
16+16+20	1,60	1,60	2,00		5,20 (1,90 - 8,00)	4,60	**8,00 A++**	1,13 (0,27 - 2,46)	565	5,20	2,58	2,58	3,24		8,40 (3,30 - 10,40)	3,84	**4,00 A+**	2,19 (0,64 - 2,94)	1095	9,90
16+16+25	1,60	1,60	2,50		5,70 (1,90 - 8,00)	4,19	**8,00 A++**	1,36 (0,27 - 2,46)	680	6,20	2,39	2,39	3,72		8,50 (3,30 - 10,40)	3,81	**4,00 A+**	2,23 (0,64 - 2,94)	1115	10,10
16+16+35	1,60	1,60	3,50		6,70 (1,90 - 8,00)	3,68	**8,00 A++**	1,82 (0,27 - 2,37)	910	8,20	2,03	2,03	4,44		8,50 (3,30 - 10,40)	3,94	**4,00 A+**	2,16 (0,63 - 2,92)	1080	9,80
16+16+42	1,47	1,47	3,86		6,80 (1,90 - 8,10)	3,66	**8,00 A++**	1,86 (0,27 - 2,46)	930	8,40	1,84	1,84	4,82		8,50 (3,30 - 10,50)	3,95	**4,00 A+**	2,15 (0,62 - 2,95)	1075	9,70
16+16+50	1,33	1,33	4,14		6,80 (2,00 - 8,50)	3,93	**8,00 A++**	1,73 (0,32 - 2,42)	865	7,90	1,66	1,66	5,18		8,50 (3,20 - 10,60)	4,21	**4,00 A+**	2,02 (0,60 - 2,80)	1010	9,10
16+16+60	1,18	1,18	4,44		6,80 (2,00 - 8,50)	3,93	**8,00 A++**	1,73 (0,32 - 2,42)	865	7,90	1,48	1,48	5,54		8,50 (3,20 - 10,60)	4,21	**4,00 A+**	2,02 (0,60 - 2,80)	1010	9,10
16+20+20	1,60	2,00	2,00		5,60 (1,90 - 8,00)	4,38	**8,00 A++**	1,28 (0,27 - 2,46)	640	5,80	2,42	3,04	3,04		8,50 (3,30 - 10,40)	3,83	**4,00 A+**	2,22 (0,63 - 2,93)	1110	10,00
16+20+25	1,60	2,00	2,50		6,10 (1,90 - 8,00)	4,01	**8,00 A++**	1,52 (0,27 - 2,46)	760	6,90	2,23	2,79	3,48		8,50 (3,30 - 10,40)	3,83	**4,00 A+**	2,22 (0,63 - 2,93)	1110	10,00
16+20+35	1,53	1,92	3,35		6,80 (1,90 - 8,00)	3,66	**8,00 A++**	1,86 (0,27 - 2,37)	930	8,40	1,92	2,39	4,19		8,50 (3,30 - 10,40)	3,95	**4,00 A+**	2,15 (0,62 - 2,86)	1075	9,70
16+20+42	1,39	1,74	3,67		6,80 (1,90 - 8,10)	3,66	**8,00 A++**	1,86 (0,27 - 2,42)	930	8,40	1,74	2,18	4,58		8,50 (3,30 - 10,50)	3,95	**4,00 A+**	2,15 (0,62 - 2,90)	1075	9,70
16+20+50	1,27	1,58	3,95		6,80 (2,00 - 8,50)	4,05	**8,00 A++**	1,68 (0,32 - 2,42)	840	7,70	1,58	1,98	4,94		8,50 (3,20 - 10,60)	4,23	**4,00 A+**	2,01 (0,60 - 2,79)	1005	9,10
16+20+60	1,13	1,42	4,25		6,80 (2,00 - 8,50)	4,05	**8,00 A++**	1,68 (0,32 - 2,42)	840	7,70	1,42	1,77	5,31		8,50 (3,20 - 10,60)	4,23	**4,00 A+**	2,01 (0,60 - 2,79)	1005	9,10
16+25+25	1,60	2,50	2,50		6,60 (1,90 - 8,00)	3,73	**8,00 A++**	1,77 (0,27 - 2,46)	885	8,00	2,06	3,22	3,22		8,50 (3,30 - 10,40)	3,83	**4,00 A+**	2,22 (0,63 - 2,93)	1110	10,00
16+25+35	1,43	2,24	3,13		6,80 (1,90 - 8,00)	3,66	**8,00 A++**	1,86 (0,27 - 2,37)	930	8,40	1,79	2,80	3,91		8,50 (3,30 - 10,40)	3,95	**4,00 A+**	2,15 (0,62 - 2,86)	1075	9,70
16+25+42	1,31	2,05	3,44		6,80 (1,90 - 8,10)	3,66	**8,00 A++**	1,86 (0,27 - 2,42)	930	8,40	1,64	2,56	4,30		8,50 (3,30 - 10,50)	3,95	**4,00 A+**	2,15 (0,62 - 2,90)	1075	9,70
16+25+50	1,19	1,87	3,74		6,80 (2,00 - 8,50)	4,05	**8,00 A++**	1,68 (0,32 - 2,42)	840	7,70	1,49	2,34	4,67		8,50 (3,20 - 10,60)	4,23	**4,00 A+**	2,01 (0,60 - 2,79)	1005	9,10
16+25+60	1,08	1,68	4,04		6,80 (2,00 - 8,50)	4,05	**8,00 A++**	1,68 (0,32 - 2,42)	840	7,70	1,35	2,10	5,05		8,50 (3,20 - 10,60)	4,23	**4,00 A+**	2,01 (0,60 - 2,79)	1005	9,10
16+35+35	1,26	2,77	2,77		6,80 (1,90 - 8,10)	3,74	**8,00 A++**	1,82 (0,29 - 2,37)	910	8,20	1,58	3,46	3,46		8,50 (3,30 - 10,50)	3,99	**4,00 A+**	2,13 (0,64 - 2,88)	1065	9,60
16+35+42	1,17	2,56	3,07		6,80 (1,90 - 8,20)	3,74	**8,00 A++**	1,82 (0,29 - 2,42)	910	8,20	1,46	3,20	3,84		8,50 (3,30 - 10,50)	4,01	**4,00 A+**	2,12 (0,64 - 2,87)	1060	9,60
16+35+50	1,07	2,36	3,37		6,80 (2,00 - 8,50)	4,05	**8,00 A++**	1,68 (0,34 - 2,38)	840	7,70	1,34	2,95	4,21		8,50 (3,20 - 10,60)	4,27	**4,00 A+**	1,99 (0,60 - 2,77)	995	9,00
16+35+60	0,98	2,14	3,68		6,80 (2,00 - 8,50)	4,05	**8,00 A++**	1,68 (0,34 - 2,38)	840	7,70	1,23	2,68	4,59		8,50 (3,20 - 10,60)	4,27	**4,00 A+**	1,99 (0,60 - 2,77)	995	9,00
16+42+42	1,08	2,86	2,86		6,80 (1,90 - 8,20)	3,74	**8,00 A++**	1,82 (0,29 - 2,42)	910	8,20	1,36	3,57	3,57		8,50 (3,30 - 10,50)	4,03	**4,00 A+**	2,11 (0,64 - 2,86)	1055	9,50
16+42+50	1,01	2,64	3,15		6,80 (2,00 - 8,50)	4,05	**8,00 A++**	1,68 (0,34 - 2,33)	840	7,70	1,25	3,31	3,94		8,50 (3,20 - 10,60)	4,29	**4,00 A+**	1,98 (0,60 - 2,76)	990	9,00

Rating Conditions: Cooling Indoor 27°C DB / 19°C WB. Cooling Outdoor 35°C DB / 24°C WB. Heating Indoor 20°C DB. Heating Outdoor 7°C DB / 6°C WB. (DB: Dry Bulb; WB: Wet Bulb).
Specifications subject to change without notice. For detailed information about ErP / Energy Labelling, please visit our websites www.aircon.panasonic.eu or www.ptc.panasonic.eu.

Free Multi R32 combinations table

Free Multi 4x1 CU-4Z68TBE. Minimum capacity connected: 4,5 kW. Maximum capacity connected: 11,5 kW • R32 refrigerant

Indoor unit capacity	Cooling capacity (kW). Rooms					EER	SEER [1]	Input power rating	A.E.C.	Current	Heating capacity (kW). Rooms					COP	SCOP [1]	Input power rating	A.E.C.	Current
	A	B	C	D	Total (Min - Max)	W/W		kW	kWh	230V	A	B	C	D	Total (Min - Max)	W/W		kW	kWh	230V
20+20+20	2,00	2,00	2,00		6,00 (1,90 - 8,00)	4,05	**8,00 A++**	1,48 (0,27 - 2,41)	740	6,80	2,83	2,83	2,83		8,49 (3,30 - 10,40)	3,91	**4,00 A+**	2,17 (0,63 - 2,92)	1085	9,80
20+20+25	2,00	2,00	2,50		6,50 (1,90 - 8,00)	3,76	**8,00 A++**	1,73 (0,27 - 2,41)	865	7,90	2,62	2,62	3,26		8,50 (3,30 - 10,40)	3,92	**4,00 A+**	2,17 (0,63 - 2,92)	1085	9,80
20+20+35	1,81	1,81	3,18		6,80 (1,90 - 8,00)	3,66	**8,00 A++**	1,86 (0,27 - 2,32)	930	8,40	2,27	2,27	3,96		8,50 (3,30 - 10,40)	3,95	**4,00 A+**	2,15 (0,62 - 2,85)	1075	9,70
20+20+42	1,66	1,66	3,48		6,80 (1,90 - 8,10)	3,74	**8,00 A++**	1,82 (0,29 - 2,42)	910	8,20	2,07	2,07	4,36		8,50 (3,30 - 10,50)	3,97	**4,00 A+**	2,14 (0,62 - 2,89)	1070	9,70
20+20+50	1,51	1,51	3,78		6,80 (2,00 - 8,50)	4,05	**8,00 A++**	1,68 (0,34 - 2,38)	840	7,70	1,89	1,89	4,72		8,50 (3,20 - 10,60)	4,25	**4,00 A+**	2,00 (0,60 - 2,78)	1000	9,00
20+20+60	1,36	1,36	4,08		6,80 (2,00 - 8,50)	4,05	**8,00 A++**	1,68 (0,34 - 2,38)	840	7,70	1,70	1,70	5,10		8,50 (3,20 - 10,60)	4,25	**4,00 A+**	2,00 (0,60 - 2,78)	1000	9,00
20+25+25	1,94	2,43	2,43		6,80 (1,90 - 8,00)	3,66	**8,00 A++**	1,86 (0,27 - 2,41)	930	8,40	2,42	3,04	3,04		8,50 (3,30 - 10,40)	3,92	**4,00 A+**	2,17 (0,63 - 2,92)	1085	9,80
20+25+35	1,69	2,13	2,98		6,80 (1,90 - 8,00)	3,66	**8,00 A++**	1,86 (0,27 - 2,32)	930	8,40	2,12	2,66	3,72		8,50 (3,30 - 10,40)	3,95	**4,00 A+**	2,15 (0,62 - 2,85)	1075	9,70
20+25+42	1,56	1,95	3,29		6,80 (1,90 - 8,10)	3,74	**8,00 A++**	1,82 (0,29 - 2,42)	910	8,20	1,95	2,44	4,11		8,50 (3,30 - 10,50)	3,97	**4,00 A+**	2,14 (0,62 - 2,89)	1070	9,70
20+25+50	1,43	1,79	3,58		6,80 (2,00 - 8,50)	4,05	**8,00 A++**	1,68 (0,34 - 2,38)	840	7,70	1,79	2,24	4,47		8,50 (3,20 - 10,60)	4,25	**4,00 A+**	2,00 (0,60 - 2,78)	1000	9,00
20+25+60	1,29	1,62	3,89		6,80 (2,00 - 8,50)	4,05	**8,00 A++**	1,68 (0,34 - 2,38)	840	7,70	1,62	2,02	4,86		8,50 (3,20 - 10,60)	4,25	**4,00 A+**	2,00 (0,60 - 2,78)	1000	9,00
20+35+35	1,52	2,64	2,64		6,80 (1,90 - 8,10)	3,74	**8,00 A++**	1,82 (0,29 - 2,33)	910	8,20	1,88	3,31	3,31		8,50 (3,30 - 10,50)	4,01	**4,00 A+**	2,12 (0,64 - 2,87)	1060	9,60
20+35+42	1,40	2,45	2,95		6,80 (1,90 - 8,20)	3,74	**8,00 A++**	1,82 (0,29 - 2,42)	910	8,20	1,75	3,07	3,68		8,50 (3,30 - 10,50)	4,03	**4,00 A+**	2,11 (0,64 - 2,86)	1055	9,50
20+35+50	1,29	2,27	3,24		6,80 (2,00 - 8,50)	4,05	**8,00 A++**	1,68 (0,34 - 2,33)	840	7,70	1,62	2,83	4,05		8,50 (3,20 - 10,60)	4,29	**4,00 A+**	1,98 (0,60 - 2,76)	990	9,00
20+35+60	1,18	2,07	3,55		6,80 (2,00 - 8,50)	4,05	**8,00 A++**	1,68 (0,34 - 2,33)	840	7,70	1,48	2,59	4,43		8,50 (3,20 - 10,60)	4,29	**4,00 A+**	1,98 (0,60 - 2,76)	990	9,00
20+42+42	1,30	2,75	2,75		6,80 (1,90 - 8,20)	3,84	**8,00 A++**	1,77 (0,29 - 2,37)	885	8,00	1,64	3,43	3,43		8,50 (3,30 - 10,50)	4,05	**4,00 A+**	2,10 (0,63 - 2,86)	1050	9,50
20+42+50	1,21	2,55	3,04		6,80 (2,00 - 8,50)	4,05	**8,00 A++**	1,68 (0,34 - 2,33)	840	7,70	1,52	3,19	3,79		8,50 (3,20 - 10,60)	4,31	**4,00 A+**	1,97 (0,62 - 2,75)	985	8,90
25+25+25	2,26	2,26	2,26		6,78 (1,90 - 8,00)	3,65	**8,00 A++**	1,86 (0,27 - 2,41)	930	8,40	2,83	2,83	2,83		8,49 (3,30 - 10,40)	3,91	**4,00 A+**	2,17 (0,63 - 2,92)	1085	9,80
25+25+35	2,00	2,00	2,80		6,80 (1,90 - 8,00)	3,66	**8,00 A++**	1,86 (0,27 - 2,32)	930	8,40	2,50	2,50	3,50		8,50 (3,30 - 10,40)	3,95	**4,00 A+**	2,15 (0,62 - 2,85)	1075	9,70
25+25+42	1,85	1,85	3,10		6,80 (1,90 - 8,10)	3,74	**8,00 A++**	1,82 (0,29 - 2,42)	910	8,20	2,31	2,31	3,88		8,50 (3,30 - 10,50)	3,97	**4,00 A+**	2,14 (0,62 - 2,89)	1070	9,70
25+25+50	1,70	1,70	3,40		6,80 (2,00 - 8,50)	4,05	**8,00 A++**	1,68 (0,34 - 2,38)	840	7,70	2,13	2,13	4,24		8,50 (3,20 - 10,60)	4,25	**4,00 A+**	2,00 (0,60 - 2,78)	1000	9,00
25+25+60	1,55	1,55	3,70		6,80 (2,00 - 8,50)	4,05	**8,00 A++**	1,68 (0,34 - 2,38)	840	7,70	1,93	1,93	4,64		8,50 (3,20 - 10,60)	4,25	**4,00 A+**	2,00 (0,60 - 2,78)	1000	9,00
25+35+35	1,78	2,51	2,51		6,80 (1,90 - 8,10)	3,74	**8,00 A++**	1,82 (0,29 - 2,33)	910	8,20	2,24	3,13	3,13		8,50 (3,30 - 10,50)	4,01	**4,00 A+**	2,12 (0,64 - 2,87)	1060	9,60
25+35+42	1,67	2,33	2,80		6,80 (1,90 - 8,20)	3,74	**8,00 A++**	1,82 (0,29 - 2,42)	910	8,20	2,08	2,92	3,50		8,50 (3,30 - 10,50)	4,03	**4,00 A+**	2,11 (0,64 - 2,86)	1055	9,50
25+35+50	1,55	2,16	3,09		6,80 (2,00 - 8,50)	4,05	**8,00 A++**	1,68 (0,34 - 2,33)	840	7,70	1,93	2,70	3,87		8,50 (3,20 - 10,60)	4,29	**4,00 A+**	1,98 (0,60 - 2,76)	990	9,00
25+42+42	1,56	2,62	2,62		6,80 (1,90 - 8,20)	3,84	**8,00 A++**	1,77 (0,29 - 2,37)	885	8,00	1,94	3,28	3,28		8,50 (3,30 - 10,50)	4,05	**4,00 A+**	2,10 (0,63 - 2,86)	1050	9,50
35+35+35	2,26	2,26	2,26		6,78 (1,90 - 8,20)	3,83	**8,00 A++**	1,77 (0,29 - 2,33)	885	8,00	2,83	2,83	2,83		8,49 (3,30 - 10,50)	4,12	**4,00 A+**	2,06 (0,63 - 2,85)	1030	9,30
35+35+42	2,13	2,13	2,54		6,80 (1,90 - 8,20)	3,84	**8,00 A++**	1,77 (0,29 - 2,33)	885	8,00	2,66	2,66	3,18		8,50 (3,30 - 10,50)	4,15	**4,00 A+**	2,05 (0,63 - 2,80)	1025	9,30
4 Rooms																				
16+16+16+16	1,65	1,65	1,65	1,65	6,60 (1,90 - 8,70)	4,49	**8,50 A+++**	1,47 (0,34 - 2,38)	735	6,70	2,12	2,12	2,12	2,12	8,48 (3,00 - 10,60)	4,44	**4,20 A+**	1,91 (0,58 - 2,69)	955	8,60
16+16+16+20	1,60	1,60	1,60	2,00	6,80 (1,90 - 8,80)	4,39	**8,00 A++**	1,55 (0,34 - 2,47)	775	7,00	2,00	2,00	2,00	2,50	8,50 (3,00 - 10,60)	4,47	**4,20 A+**	1,90 (0,58 - 2,68)	950	8,60
16+16+16+25	1,49	1,49	1,49	2,33	6,80 (1,90 - 8,80)	4,39	**8,00 A++**	1,55 (0,34 - 2,47)	775	7,00	1,86	1,86	1,86	2,92	8,50 (3,00 - 10,60)	4,47	**4,20 A+**	1,90 (0,58 - 2,68)	950	8,60
16+16+16+35	1,31	1,31	1,31	2,87	6,80 (1,90 - 8,80)	4,39	**8,00 A++**	1,55 (0,34 - 2,38)	775	7,00	1,64	1,64	1,64	3,58	8,50 (3,00 - 10,60)	4,52	**4,20 A+**	1,88 (0,58 - 2,66)	940	8,50
16+16+16+42	1,21	1,21	1,21	3,17	6,80 (1,90 - 8,80)	4,50	**8,00 A++**	1,51 (0,34 - 2,38)	755	6,80	1,51	1,51	1,51	3,97	8,50 (3,00 - 10,60)	4,55	**4,20 A+**	1,87 (0,58 - 2,65)	935	8,50
16+16+16+50	1,11	1,11	1,11	3,47	6,80 (1,90 - 8,80)	4,50	**8,00 A++**	1,51 (0,40 - 2,24)	755	6,80	1,39	1,39	1,39	4,33	8,50 (3,00 - 10,60)	4,64	**4,20 A+**	1,83 (0,65 - 2,55)	915	8,30
16+16+16+60	1,01	1,01	1,01	3,77	6,80 (1,90 - 8,80)	4,50	**8,00 A++**	1,51 (0,40 - 2,24)	755	6,80	1,26	1,26	1,26	4,72	8,50 (3,00 - 10,60)	4,64	**4,20 A+**	1,83 (0,65 - 2,55)	915	8,30
16+16+20+20	1,51	1,51	1,89	1,89	6,80 (1,90 - 8,80)	4,39	**8,00 A++**	1,55 (0,34 - 2,43)	775	7,00	1,89	1,89	2,36	2,36	8,50 (3,10 - 10,60)	4,50	**4,20 A+**	1,89 (0,60 - 2,67)	945	8,50
16+16+20+25	1,41	1,41	1,77	2,21	6,80 (1,90 - 8,80)	4,39	**8,00 A++**	1,55 (0,34 - 2,43)	775	7,00	1,77	1,77	2,20	2,76	8,50 (3,10 - 10,60)	4,50	**4,20 A+**	1,89 (0,60 - 2,67)	945	8,50
16+16+20+35	1,25	1,25	1,56	2,74	6,80 (1,90 - 8,80)	4,50	**8,00 A++**	1,51 (0,34 - 2,38)	755	6,80	1,56	1,56	1,95	3,43	8,50 (3,00 - 10,60)	4,55	**4,20 A+**	1,87 (0,58 - 2,65)	935	8,50
16+16+20+42	1,16	1,16	1,44	3,04	6,80 (1,90 - 8,80)	4,50	**8,00 A++**	1,51 (0,37 - 2,38)	755	6,80	1,45	1,45	1,80	3,80	8,50 (3,00 - 10,60)	4,57	**4,20 A+**	1,86 (0,60 - 2,64)	930	8,40
16+16+20+50	1,07	1,07	1,33	3,33	6,80 (1,90 - 8,80)	4,50	**8,00 A++**	1,51 (0,40 - 2,20)	755	6,80	1,33	1,33	1,67	4,17	8,50 (3,00 - 10,60)	4,64	**4,20 A+**	1,83 (0,66 - 2,54)	915	8,30
16+16+20+60	0,97	0,97	1,21	3,65	6,80 (1,90 - 8,80)	4,50	**8,00 A++**	1,51 (0,40 - 2,20)	755	6,80	1,21	1,21	1,52	4,56	8,50 (3,00 - 10,60)	4,64	**4,20 A+**	1,83 (0,66 - 2,54)	915	8,30
16+16+25+25	1,33	1,33	2,07	2,07	6,80 (1,90 - 8,80)	4,39	**8,00 A++**	1,55 (0,34 - 2,43)	775	7,00	1,66	1,66	2,59	2,59	8,50 (3,10 - 10,60)	4,50	**4,20 A+**	1,89 (0,60 - 2,67)	945	8,50
16+16+25+35	1,18	1,18	1,85	2,59	6,80 (1,90 - 8,80)	4,50	**8,00 A++**	1,51 (0,34 - 2,38)	755	6,80	1,48	1,48	2,31	3,23	8,50 (3,00 - 10,60)	4,55	**4,20 A+**	1,87 (0,58 - 2,65)	935	8,50
16+16+25+42	1,10	1,10	1,72	2,88	6,80 (1,90 - 8,80)	4,50	**8,00 A++**	1,51 (0,37 - 2,38)	755	6,80	1,37	1,37	2,15	3,61	8,50 (3,00 - 10,60)	4,57	**4,20 A+**	1,86 (0,60 - 2,64)	930	8,40
16+16+25+50	1,02	1,02	1,58	3,18	6,80 (1,90 - 8,80)	4,50	**8,00 A++**	1,51 (0,40 - 2,20)	755	6,80	1,27	1,27	1,99	3,97	8,50 (3,00 - 10,60)	4,64	**4,20 A+**	1,83 (0,66 - 2,54)	915	8,30
16+16+35+35	1,07	1,07	2,33	2,33	6,80 (1,90 - 8,80)	4,50	**8,00 A++**	1,51 (0,37 - 2,33)	755	6,80	1,33	1,33	2,92	2,92	8,50 (3,00 - 10,60)	4,59	**4,20 A+**	1,85 (0,61 - 2,62)	925	8,40
16+16+35+42	1,00	1,00	2,18	2,62	6,80 (1,90 - 8,80)	4,50	**8,00 A++**	1,51 (0,37 - 2,33)	755	6,80	1,25	1,25	2,72	3,28	8,50 (3,00 - 10,60)	4,62	**4,60 A++**	1,84 (0,61 - 2,61)	920	8,30
16+20+20+20	1,43	1,79	1,79	1,79	6,80 (1,90 - 8,80)	4,39	**8,00 A++**	1,55 (0,34 - 2,43)	775	7,00	1,78	2,24	2,24	2,24	8,50 (3,10 - 10,60)	4,52	**4,20 A+**	1,88 (0,60 - 2,67)	940	8,50
16+20+20+25	1,34	1,68	1,68	2,10	6,80 (1,90 - 8,80)	4,39	**8,00 A++**	1,55 (0,34 - 2,43)	775	7,00	1,68	2,10	2,10	2,62	8,50 (3,10 - 10,60)	4,52	**4,20 A+**	1,88 (0,60 - 2,67)	940	8,50
16+20+20+35	1,20	1,49	1,49	2,62	6,80 (1,90 - 8,80)	4,50	**8,00 A++**	1,51 (0,37 - 2,38)	755	6,80	1,49	1,87	1,87	3,27	8,50 (3,00 - 10,60)	4,57	**4,20 A+**	1,86 (0,60 - 2,64)	930	8,40
16+20+20+42	1,11	1,39	1,39	2,91	6,80 (1,90 - 8,80)	4,50	**8,00 A++**	1,51 (0,37 - 2,38)	755	6,80	1,39	1,73	1,73	3,65	8,50 (3,00 - 10,60)	4,57	**4,20 A+**	1,86 (0,61 - 2,63)	930	8,40
16+20+20+50	1,03	1,28	1,28	3,21	6,80 (1,90 - 8,80)	4,50	**8,00 A++**	1,51 (0,42 - 2,20)	755	6,80	1,28	1,60	1,60	4,02	8,50 (3,00 - 10,60)	4,67	**4,20 A+**	1,82 (0,68 - 2,53)	910	8,20
16+20+25+25	1,26	1,58	1,98	1,98	6,80 (1,90 - 8,80)	4,39	**8,00 A++**	1,55 (0,34 - 2,43)	775	7,00	1,58	1,98	2,47	2,47	8,50 (3,10 - 10,60)	4,52	**4,20 A+**	1,88 (0,60 - 2,67)	940	8,50
16+20+25+35	1,13	1,42	1,77	2,48	6,80 (1,90 - 8,80)	4,50	**8,00 A++**	1,51 (0,37 - 2,38)	755	6,80	1,42	1,77	2,21	3,10	8,50 (3,00 - 10,60)	4,57	**4,20 A+**	1,86 (0,60 - 2,64)	930	8,40
16+20+25+42	1,06	1,32	1,65	2,77	6,80 (1,90 - 8,80)	4,50	**8,00 A++**	1,51 (0,37 - 2,38)	755	6,80	1,32	1,65	2,06	3,47	8,50 (3,00 - 10,60)	4,57	**4,20 A+**	1,86 (0,61 - 2,63)	930	8,40
16+20+25+50	0,98	1,23	1,53	3,06	6,80 (1,90 - 8,80)	4,50	**8,00 A++**	1,51 (0,42 - 2,20)	755	6,80	1,23	1,53	1,91	3,83	8,50 (3,00 - 10,60)	4,67	**4,20 A+**	1,82 (0,68 - 2,53)	910	8,20
16+20+35+35	1,02	1,28	2,25	2,25	6,80 (1,90 - 8,80)	4,50	**8,00 A++**	1,51 (0,37 - 2,33)	755	6,80	1,28	1,60	2,81	2,81	8,50 (3,00 - 10,60)	4,62	**4,60 A++**	1,84 (0,61 - 2,61)	920	8,30
16+20+35+42	0,96	1,20	2,11	2,53	6,80 (1,90 - 8,80)	4,50	**8,00 A++**	1,51 (0,37 - 2,33)	755	6,80	1,20	1,50	2,63	3,17	8,50 (3,00 - 10,60)	4,62	**4,60 A++**	1,84 (0,61 - 2,61)	920	8,30
16+25+25+25	1,19	1,87	1,87	1,87	6,80 (1,90 - 8,80)	4,39	**8,00 A++**	1,55 (0,34 - 2,43)	775	7,00	1,48	2,34	2,34	2,34	8,50 (3,10 - 10,60)	4,52	**4,20 A+**	1,88 (0,60 - 2,67)	940	8,50
16+25+25+35	1,08	1,68	1,68	2,36	6,80 (1,90 - 8,80)	4,50	**8,00 A++**	1,51 (0,37 - 2,38)	755	6,80	1,35	2,10	2,10	2,95	8,50 (3,00 - 10,60)	4,57	**4,20 A+**	1,86 (0,60 - 2,64)	930	8,40
16+25+25+42	1,01	1,57	1,57	2,65	6,80 (1,90 - 8,80)	4,50	**8,00 A++**	1,51 (0,37 - 2,38)	755	6,80	1,25	1,97	1,97	3,31	8,50 (3,00 - 10,60)	4,57	**4,20 A+**	1,86 (0,61 - 2,63)	930	8,40
16+25+35+35	0,98	1,54	2,14	2,14	6,80 (1,90 - 8,80)	4,50	**8,00 A++**	1,51 (0,37 - 2,33)	755	6,80	1,23	1,91	2,68	2,68	8,50 (3,00 - 10,60)	4,62	**4,60 A++**	1,84 (0,61 - 2,61)	920	8,30
20+20+20+20	1,70	1,70	1,70	1,70	6,80 (1,90 - 8,80)	4,39	**8,00 A++**	1,55 (0,34 - 2,38)	775	7,00	2,12	2,12	2,12	2,12	8,48 (3,10 - 10,60)	4,51	**4,20 A+**	1,88 (0,60 - 2,66)	940	8,50
20+20+20+25	1,60	1,60	1,60	2,00	6,80 (1,90 - 8,80)	4,39	**8,00 A++**	1,55 (0,34 - 2,38)	775	7,00	2,00	2,00	2,00	2,50	8,50 (3,10 - 10,60)	4,52	**4,20 A+**	1,88 (0,60 - 2,66)	940	8,50
20+20+20+35	1,43	1,43	1,43	2,51	6,80 (1,90 - 8,80)	4,50	**8,00 A++**	1,51 (0,37 - 2,33)	755	6,80	1,79	1,79	1,79	3,13	8,50 (3,00 - 10,60)	4,57	**4,20 A+**	1,86 (0,61 - 2,63)	930	8,40
20+20+20+42	1,33	1,33	1,33	2,81	6,80 (1,90 - 8,80)	4,50	**8,00 A++**	1,51 (0,37 - 2,33)	755	6,80	1,67	1,67	1,67	3,49	8,50 (3,00 - 10,60)	4,59	**4,20 A+**	1,85 (0,61 - 2,62)	925	8,40
20+20+20+50	1,24	1,24	1,24	3,08	6,80 (1,90 - 8,80)	4,50	**8,00 A++**	1,51 (0,42 - 2,20)	755	6,80	1,55	1,55	1,55	3,85	8,50 (3,00 - 10,60)	4,70	**4,20 A+**	1,81 (0,68 - 2,52)	905	8,20
20+20+25+25	1,51	1,51	1,89	1,89	6,80 (1,90 - 8,80)	4,39	**8,00 A++**	1,55 (0,34 - 2,38)	775	7,00	1,89	1,89	2,36	2,36	8,50 (3,10 - 10,60)	4,52	**4,20 A+**	1,88 (0,60 - 2,66)	940	8,50
20+20+25+35	1,36	1,36	1,70	2,38	6,80 (1,90 - 8,80)	4,50	**8,00 A++**	1,51 (0,37 - 2,33)	755	6,80	1,70	1,70	2,12	2,98	8,50 (3,00 - 10,60)	4,57	**4,20 A+**	1,86 (0,61 - 2,63)	930	8,40
20+20+25+42	1,27	1,27	1,59	2,67	6,80 (1,90 - 8,80)	4,50	**8,00 A++**	1,51 (0,37 - 2,33)	755	6,80	1,59	1,59	1,98	3,34	8,50 (3,00 - 10,60)	4,59	**4,20 A+**	1,85 (0,61 - 2,62)	925	8,40
20+20+25+50	1,18	1,18	1,48	2,96	6,80 (1,90 - 8,80)	4,50	**8,00 A++**	1,51 (0,42 - 2,20)	755	6,80	1,48	1,48	1,84	3,70	8,50 (3,00 - 10,60)	4,70	**4,20 A+**	1,81 (0,68 - 2,52)	905	8,20
20+20+35+35	1,24	1,24	2,16	2,16	6,80 (1,90 - 8,80)	4,50	**8,00 A++**	1,51 (0,37 - 2,33)	755	6,80	1,55	1,55	2,70	2,70	8,50 (3,00 - 10,60)	4,62	**4,60 A++**	1,84 (0,61 - 2,61)	920	8,30
20+25+25+25	1,43	1,79	1,79	1,79	6,80 (1,90 - 8,80)	4,39	**8,00 A++**	1,55 (0,34 - 2,38)	775	7,00	1,78	2,24	2,24	2,24	8,50 (3,10 - 10,60)	4,52	**4,20 A+**	1,88 (0,60 - 2,66)	940	8,50
20+25+25+35	1,29	1,62	1,62	2,27	6,80 (1,90 - 8,80)	4,50	**8,00 A++**	1,51 (0,37 - 2,33)	755	6,80	1,62	2,02	2,02	2,84	8,50 (3,00 - 10,60)	4,57	**4,20 A+**	1,86 (0,61 - 2,63)	930	8,40
20+25+25+42	1,21	1,52	1,52	2,55	6,80 (1,90 - 8,80)	4,50	**8,00 A++**	1,51 (0,37 - 2,33)	755	6,80	1,51	1,90	1,90	3,19	8,50 (3,00 - 10,60)	4,59	**4,20 A+**	1,85 (0,61 - 2,62)	925	8,40
20+25+35+35	1,18	1,48	2,07	2,07	6,80 (1,90 - 8,80)	4,50	**8,00 A++**	1,51 (0,37 - 2,33)	755	6,80	1,47	1,85	2,59	2,59	8,50 (3,00 - 10,60)	4,62	**4,60 A++**	1,84 (0,61 - 2,61)	920	8,30
25+25+25+25	1,70	1,70	1,70	1,70	6,80 (1,90 - 8,80)	4,39	**8,00 A++**	1,55 (0,34 - 2,38)	775	7,00	2,12	2,12	2,12	2,12	8,48 (3,10 - 10,60)	4,51	**4,20 A+**	1,88 (0,60 - 2,66)	940	8,50
25+25+25+35	1,55	1,55	1,55	2,15	6,80 (1,90 - 8,8 0)	4,50	**8,00 A++**	1,51 (0,37 - 2,33)	755	6,80	1,93	1,93	1,93	2,71	8,50 (3,00 - 10,60)	4,57	**4,20 A+**	1,86 (0,61 - 2,63)	930	8,40

1) Energy Label Scale from A+++ to D.

Free Multi 4x1 CU-4Z80TBE. Minimum capacity connected: 4,5 kW. Maximum capacity connected: 14,7 kW • R32 refrigerant

Indoor unit capacity	Cooling capacity (kW). Rooms					EER	SEER [1]	Input power rating	A.E.C.	Current	Heating capacity (kW). Rooms					COP	SCOP [1]	Input power rating	A.E.C.	Current
	A	B	C	D	Total (Min - Max)	W/W		kW	kWh	230V	A	B	C	D	Total (Min - Max)	W/W		kW	kWh	230V
1 Room																				
16	1,60				1,60 (1,30 - 2,30)	4,00		0,40 (0,25 - 0,64)	200	2,00	2,60				2,60 (1,20 - 3,20)	4,33		0,60 (0,30 - 0,96)	300	3,00
20	2,00				2,00 (1,80 - 2,90)	4,00		0,50 (0,34 - 0,81)	250	2,50	3,20				3,20 (1,20 - 4,10)	4,32		0,74 (0,30 - 1,23)	370	3,70
25	2,50				2,50 (1,80 - 2,90)	3,97		0,63 (0,34 - 0,81)	315	3,20	3,60				3,60 (1,20 - 4,30)	3,83		0,94 (0,30 - 1,23)	470	4,70
35	3,50				3,50 (1,80 - 4,10)	3,72		0,94 (0,34 - 1,36)	470	4,50	4,50				4,50 (1,20 - 5,80)	3,66		1,23 (0,30 - 2,10)	615	6,00
42	4,20				4,20 (1,80 - 4,50)	3,07		1,37 (0,34 - 1,99)	685	6,40	5,60				5,60 (1,20 - 6,80)	3,26		1,72 (0,30 - 2,93)	860	8,00
50	5,00				5,00 (1,90 - 5,70)	3,23		1,55 (0,34 - 2,13)	775	7,20	6,80				6,80 (1,20 - 6,90)	3,24		2,10 (0,30 - 2,52)	1050	9,70
60	6,00				6,00 (1,90 - 6,20)	2,96		2,03 (0,34 - 2,33)	1015	9,20	8,50				8,50 (1,30 - 9,00)	3,54		2,40 (0,62 - 2,55)	1200	11,10
71	7,10				7,10 (2,00 - 7,20)	2,81		2,53 (0,37 - 2,77)	1265	11,40	8,70				8,70 (1,40 - 9,20)	3,41		2,55 (0,68 - 2,72)	1275	11,80
2 Rooms																				
16 + 16	1,60	1,60			3,20 (2,40 - 5,80)	4,38	**5,60 A+**	0,73 (0,38 - 1,99)	365	3,70	2,60	2,60			5,20 (2,20 - 8,20)	3,33	**3,90 A**	1,56 (0,43 - 2,84)	780	7,40
16 + 20	1,60	2,00			3,60 (2,40 - 5,80)	4,14	**5,60 A+**	0,87 (0,38 - 1,99)	435	4,30	2,58	3,22			5,80 (2,20 - 8,20)	3,45	**3,90 A**	1,68 (0,43 - 2,83)	840	8,00
16 + 25	1,60	2,50			4,10 (2,40 - 5,80)	3,83	**5,60 A+**	1,07 (0,38 - 1,99)	535	5,20	2,42	3,78			6,20 (2,20 - 8,20)	3,41	**3,90 A**	1,82 (0,43 - 2,83)	910	8,60
16 + 35	1,60	3,50			5,10 (2,40 - 5,80)	3,45	**5,60 A+**	1,48 (0,37 - 1,92)	740	7,20	2,23	4,87			7,10 (2,20 - 8,60)	3,57	**3,90 A**	1,99 (0,38 - 2,91)	995	9,40
16 + 42	1,60	4,20			5,80 (2,40 - 6,70)	3,19	**5,60 A+**	1,82 (0,37 - 2,48)	910	8,70	2,26	5,94			8,20 (2,20 - 9,80)	3,46	**3,90 A**	2,37 (0,37 - 3,44)	1185	11,10
16 + 50	1,60	5,00			6,60 (2,40 - 7,20)	3,20	**6,10 A++**	2,06 (0,35 - 2,48)	1030	9,90	2,28	7,12			9,40 (2,20 - 10,00)	3,82	**4,10 A+**	2,46 (0,33 - 3,25)	1230	11,60
16 + 60	1,60	6,00			7,60 (2,40 - 8,50)	2,83	**6,10 A++**	2,69 (0,35 - 3,49)	1345	12,90	1,98	7,42			9,40 (2,20 - 10,00)	3,82	**4,10 A+**	2,46 (0,33 - 3,25)	1230	11,60
16 + 71	1,47	6,53			8,00 (2,50 - 8,50)	2,82	**6,10 A++**	2,84 (0,38 - 3,34)	1420	13,60	1,73	7,67			9,40 (2,20 - 10,30)	3,92	**4,10 A+**	2,40 (0,32 - 3,42)	1200	11,30
20 + 20	2,00	2,00			4,00 (2,40 - 5,80)	3,96	**5,60 A+**	1,01 (0,38 - 1,93)	505	5,00	3,20	3,20			6,40 (2,20 - 8,20)	3,44	**3,90 A**	1,86 (0,39 - 2,82)	930	8,70
20 + 25	2,00	2,50			4,50 (2,40 - 5,80)	3,63	**5,60 A+**	1,24 (0,38 - 1,93)	620	6,00	3,02	3,78			6,80 (2,20 - 8,20)	3,54	**3,90 A**	1,92 (0,39 - 2,82)	960	9,00
20 + 35	2,00	3,50			5,50 (2,40 - 5,80)	3,33	**5,60 A+**	1,65 (0,37 - 1,86)	825	8,00	2,80	4,90			7,70 (2,20 - 8,60)	3,55	**3,90 A**	2,17 (0,37 - 2,85)	1085	10,20
20 + 42	2,00	4,20			6,20 (2,40 - 7,20)	3,00	**5,60 A+**	2,07 (0,37 - 2,90)	1035	9,90	2,84	5,96			8,80 (2,20 - 10,00)	3,64	**3,90 A**	2,42 (0,37 - 3,55)	1210	11,40
20 + 50	2,00	5,00			7,00 (2,40 - 8,10)	3,17	**6,10 A++**	2,21 (0,35 - 3,10)	1105	10,60	2,69	6,71			9,40 (2,20 - 10,00)	3,84	**4,10 A+**	2,45 (0,32 - 3,23)	1225	11,50
20 + 60	2,00	6,00			8,00 (2,40 - 8,50)	2,75	**6,10 A++**	2,91 (0,35 - 3,49)	1455	13,90	2,35	7,05			9,40 (2,20 - 10,00)	3,84	**4,10 A+**	2,45 (0,32 - 3,23)	1225	11,50
20 + 71	1,76	6,24			8,00 (2,50 - 8,50)	2,89	**6,10 A++**	2,77 (0,38 - 3,34)	1385	13,30	2,07	7,33			9,40 (2,20 - 10,30)	3,93	**4,10 A+**	2,39 (0,32 - 3,40)	1195	11,20
25 + 25	2,50	2,50			5,00 (2,40 - 5,80)	3,50	**5,60 A+**	1,43 (0,38 - 1,93)	715	6,90	3,60	3,60			7,20 (2,20 - 8,60)	3,51	**3,90 A**	2,05 (0,39 - 2,93)	1025	9,60
25 + 35	2,50	3,50			6,00 (2,40 - 6,70)	3,09	**5,60 A+**	1,94 (0,37 - 2,48)	970	9,30	3,37	4,73			8,10 (2,20 - 9,80)	3,49	**3,90 A**	2,32 (0,37 - 3,44)	1160	10,90
25 + 42	2,50	4,20			6,70 (2,40 - 7,20)	2,78	**5,60 A+**	2,41 (0,37 - 2,90)	1205	11,50	3,43	5,77			9,20 (2,20 - 10,00)	3,58	**3,90 A**	2,57 (0,37 - 3,55)	1285	12,10
25 + 50	2,50	5,00			7,50 (2,40 - 8,50)	2,94	**6,10 A++**	2,55 (0,35 - 3,49)	1275	12,20	3,13	6,27			9,40 (2,20 - 10,00)	3,84	**4,10 A+**	2,45 (0,32 - 3,23)	1225	11,50
25 + 60	2,35	5,65			8,00 (2,50 - 8,50)	2,75	**6,10 A++**	2,91 (0,39 - 3,49)	1455	13,90	2,76	6,64			9,40 (2,20 - 10,00)	3,84	**4,10 A+**	2,45 (0,32 - 3,23)	1225	11,50
25 + 71	2,08	5,92			8,00 (2,50 - 8,50)	2,89	**6,10 A++**	2,77 (0,38 - 3,34)	1385	13,30	2,45	6,95			9,40 (2,20 - 10,30)	3,93	**4,10 A+**	2,39 (0,32 - 3,40)	1195	11,20
35 + 35	3,50	3,50			7,00 (2,40 - 8,10)	2,75	**5,60 A+**	2,55 (0,37 - 3,63)	1275	12,20	4,50	4,50			9,00 (2,20 - 10,00)	3,67	**3,90 A**	2,45 (0,36 - 3,47)	1225	11,50
35 + 42	3,50	4,20			7,70 (2,40 - 8,50)	2,53	**5,60 A+**	3,04 (0,37 - 4,12)	1520	14,60	4,27	5,13			9,40 (2,20 - 10,00)	3,63	**3,90 A**	2,59 (0,35 - 3,46)	1295	12,20
35 + 50	3,29	4,71			8,00 (2,50 - 8,50)	2,89	**6,10 A++**	2,77 (0,38 - 3,34)	1385	13,30	3,87	5,53			9,40 (2,20 - 10,00)	3,95	**4,10 A+**	2,38 (0,32 - 3,20)	1190	11,20
35 + 60	2,95	5,05			8,00 (2,50 - 8,50)	2,89	**6,10 A++**	2,77 (0,38 - 3,34)	1385	13,30	3,46	5,94			9,40 (2,20 - 10,30)	3,95	**4,10 A+**	2,38 (0,32 - 3,32)	1190	11,20
35 + 71	2,64	5,36			8,00 (2,50 - 8,60)	2,96	**6,10 A++**	2,70 (0,38 - 3,34)	1350	12,90	3,10	6,30			9,40 (2,20 - 10,50)	3,98	**4,10 A+**	2,36 (0,31 - 3,43)	1180	11,10
42 + 42	4,00	4,00			8,00 (2,50 - 8,50)	2,40	**5,60 A+**	3,34 (0,40 - 4,04)	1670	16,00	4,70	4,70			9,40 (2,20 - 10,00)	3,64	**3,90 A**	2,58 (0,35 - 3,45)	1290	12,10
42 + 50	3,65	4,35			8,00 (2,50 - 8,50)	2,89	**6,10 A++**	2,77 (0,38 - 3,34)	1385	13,30	4,29	5,11			9,40 (2,20 - 10,30)	3,98	**4,10 A+**	2,36 (0,32 - 3,31)	1180	11,10
42 + 60	3,29	4,71			8,00 (2,50 - 8,60)	2,89	**6,10 A++**	2,77 (0,38 - 3,42)	1385	13,30	3,87	5,53			9,40 (2,20 - 10,30)	3,98	**4,10 A+**	2,36 (0,32 - 3,31)	1180	11,10
42 + 71	2,97	5,03			8,00 (2,50 - 8,60)	2,96	**6,10 A++**	2,70 (0,38 - 3,26)	1350	12,90	3,49	5,91			9,40 (2,20 - 10,50)	4,00	**4,10 A+**	2,35 (0,31 - 3,42)	1175	11,00
50 + 50	4,00	4,00			8,00 (2,50 - 8,60)	3,31	**6,10 A++**	2,42 (0,38 - 2,95)	1210	11,60	4,70	4,70			9,40 (2,20 - 10,30)	4,27	**4,10 A+**	2,20 (0,31 - 3,09)	1100	10,30
50 + 60	3,64	4,36			8,00 (2,50 - 8,60)	3,31	**6,10 A++**	2,42 (0,38 - 2,95)	1210	11,60	4,27	5,13			9,40 (2,20 - 10,50)	4,27	**4,10 A+**	2,20 (0,31 - 3,15)	1100	10,30
50 + 71	3,31	4,69			8,00 (2,50 - 8,60)	3,40	**6,10 A++**	2,35 (0,38 - 2,88)	1175	11,20	3,88	5,52			9,40 (2,20 - 10,50)	4,31	**4,10 A+**	2,18 (0,31 - 3,13)	1090	10,20
60 + 60	4,00	4,00			8,00 (2,50 - 8,60)	3,31	**6,10 A++**	2,42 (0,38 - 2,95)	1210	11,60	4,70	4,70			9,40 (2,20 - 10,50)	4,27	**4,10 A+**	2,20 (0,31 - 3,15)	1100	10,30
60 + 71	3,66	4,34			8,00 (2,50 - 8,60)	3,40	**6,10 A++**	2,35 (0,38 - 2,88)	1175	11,20	4,31	5,09			9,40 (2,20 - 10,50)	4,31	**4,10 A+**	2,18 (0,31 - 3,13)	1090	10,20
71 + 71	4,00	4,00			8,00 (2,50 - 8,60)	3,51	**6,10 A++**	2,28 (0,41 - 2,80)	1140	10,90	4,70	4,70			9,40 (2,20 - 10,50)	4,33	**4,10 A+**	2,17 (0,32 - 3,12)	1085	10,20
3 Rooms																				
16 + 16 + 16	1,60	1,60	1,60		4,80 (3,00 - 8,50)	4,44	**7,40 A++**	1,08 (0,49 - 3,11)	540	5,30	2,60	2,60	2,60		7,80 (3,20 - 10,40)	4,15	**4,20 A+**	1,88 (0,50 - 3,34)	940	8,80
16 + 16 + 20	1,60	1,60	2,00		5,20 (3,00 - 8,50)	4,41	**7,40 A++**	1,18 (0,49 - 3,11)	590	5,80	2,58	2,58	3,24		8,40 (3,20 - 10,40)	3,98	**4,20 A+**	2,11 (0,50 - 3,26)	1055	9,90
16 + 16 + 25	1,60	1,60	2,50		5,70 (3,00 - 8,50)	4,10	**7,40 A++**	1,39 (0,49 - 3,11)	695	6,70	2,47	2,47	3,86		8,80 (3,20 - 10,40)	4,21	**4,20 A+**	2,09 (0,50 - 3,26)	1045	9,80
16 + 16 + 35	1,60	1,60	3,50		6,70 (3,00 - 8,50)	3,92	**7,40 A++**	1,71 (0,48 - 3,03)	855	8,30	2,24	2,24	4,92		9,40 (3,20 - 10,40)	4,18	**4,30 A+**	2,25 (0,49 - 3,23)	1125	10,60
16 + 16 + 42	1,60	1,60	4,20		7,40 (3,00 - 8,50)	3,57	**7,40 A++**	2,07 (0,48 - 2,95)	1035	9,90	2,03	2,03	5,34		9,40 (3,20 - 10,40)	4,20	**4,30 A+**	2,24 (0,49 - 3,21)	1120	10,50
16 + 16 + 50	1,56	1,56	4,88		8,00 (3,00 - 8,60)	3,81	**7,40 A++**	2,10 (0,52 - 2,73)	1050	10,10	1,83	1,83	5,74		9,40 (3,20 - 10,40)	4,41	**4,40 A+**	2,13 (0,48 - 3,00)	1065	10,00
16 + 16 + 60	1,39	1,39	5,22		8,00 (3,00 - 8,60)	3,81	**7,40 A++**	2,10 (0,52 - 2,73)	1050	10,10	1,63	1,63	6,14		9,40 (3,20 - 10,50)	4,41	**4,40 A+**	2,13 (0,48 - 3,06)	1065	10,00
16 + 16 + 71	1,24	1,24	5,52		8,00 (3,00 - 8,80)	3,92	**7,40 A++**	2,04 (0,52 - 2,80)	1020	9,80	1,46	1,46	6,48		9,40 (3,20 - 10,50)	4,43	**4,40 A+**	2,12 (0,51 - 3,04)	1060	10,00
16 + 20 + 20	1,60	2,00	2,00		5,60 (3,00 - 8,50)	4,18	**7,40 A++**	1,34 (0,49 - 3,03)	670	6,50	2,58	3,21	3,21		9,00 (3,20 - 10,40)	4,23	**4,20 A+**	2,13 (0,49 - 3,25)	1065	10,00
16 + 20 + 25	1,60	2,00	2,50		6,10 (3,00 - 8,50)	3,94	**7,40 A++**	1,55 (0,49 - 3,03)	775	7,50	2,47	3,08	3,85		9,40 (3,20 - 10,40)	4,14	**4,30 A+**	2,27 (0,49 - 3,25)	1135	10,70
16 + 20 + 35	1,60	2,00	3,50		7,10 (3,00 - 8,50)	3,78	**7,40 A++**	1,88 (0,48 - 2,95)	940	9,00	2,12	2,65	4,63		9,40 (3,20 - 10,40)	4,20	**4,30 A+**	2,24 (0,49 - 3,21)	1120	10,50
16 + 20 + 42	1,60	2,00	4,20		7,80 (3,00 - 8,50)	3,59	**7,40 A++**	2,17 (0,48 - 2,95)	1085	10,40	1,93	2,41	5,06		9,40 (3,20 - 10,40)	4,22	**4,30 A+**	2,23 (0,49 - 3,20)	1115	10,50
16 + 20 + 50	1,49	1,86	4,65		8,00 (3,00 - 8,60)	3,81	**7,40 A++**	2,10 (0,52 - 2,73)	1050	10,10	1,75	2,19	5,46		9,40 (3,20 - 10,50)	4,43	**4,40 A+**	2,12 (0,51 - 3,05)	1060	10,00
16 + 20 + 60	1,33	1,67	5,00		8,00 (3,00 - 8,60)	3,81	**7,40 A++**	2,10 (0,52 - 2,73)	1050	10,10	1,57	1,96	5,87		9,40 (3,20 - 10,50)	4,43	**4,40 A+**	2,12 (0,51 - 3,05)	1060	10,00
16 + 20 + 71	1,20	1,50	5,30		8,00 (3,00 - 8,80)	3,92	**7,40 A++**	2,04 (0,52 - 2,80)	1020	9,80	1,41	1,76	6,23		9,40 (3,20 - 10,50)	4,45	**4,40 A+**	2,11 (0,51 - 3,03)	1055	9,90
16 + 25 + 25	1,60	2,50	2,50		6,60 (3,00 - 8,50)	3,69	**7,40 A++**	1,79 (0,49 - 3,03)	895	8,60	2,28	3,56	3,56		9,40 (3,20 - 10,40)	4,14	**4,30 A+**	2,27 (0,49 - 3,25)	1135	10,70
16 + 25 + 35	1,60	2,50	3,50		7,60 (3,00 - 8,50)	3,47	**7,40 A++**	2,19 (0,48 - 2,95)	1095	10,50	1,98	3,09	4,33		9,40 (3,20 - 10,40)	4,20	**4,30 A+**	2,24 (0,49 - 3,21)	1120	10,50
16 + 25 + 42	1,54	2,41	4,05		8,00 (3,00 - 8,60)	3,49	**7,40 A++**	2,29 (0,48 - 3,03)	1145	11,00	1,81	2,83	4,76		9,40 (3,20 - 10,40)	4,22	**4,40 A+**	2,23 (0,49 - 3,20)	1115	10,50
16 + 25 + 50	1,41	2,20	4,39		8,00 (3,00 - 8,60)	3,81	**7,40 A++**	2,10 (0,52 - 2,73)	1050	10,10	1,65	2,58	5,17		9,40 (3,20 - 10,50)	4,43	**4,40 A+**	2,12 (0,51 - 3,05)	1060	10,00
16 + 25 + 60	1,27	1,98	4,75		8,00 (3,00 - 8,80)	3,81	**7,40 A++**	2,10 (0,52 - 2,80)	1050	10,10	1,49	2,33	5,58		9,40 (3,20 - 10,50)	4,43	**4,40 A+**	2,12 (0,51 - 3,05)	1060	10,00
16 + 25 + 71	1,14	1,79	5,07		8,00 (3,00 - 8,80)	3,92	**7,40 A++**	2,04 (0,52 - 2,80)	1020	9,80	1,34	2,10	5,96		9,40 (3,20 - 10,60)	4,45	**4,40 A+**	2,11 (0,51 - 3,09)	1055	9,90
16 + 35 + 35	1,48	3,26	3,26		8,00 (3,00 - 8,60)	3,59	**7,40 A++**	2,23 (0,48 - 2,95)	1115	10,70	1,74	3,83	3,83		9,40 (3,20 - 10,50)	4,25	**4,40 A+**	2,21 (0,48 - 3,24)	1105	10,40
16 + 35 + 42	1,38	3,01	3,61		8,00 (3,00 - 8,60)	3,59	**7,40 A++**	2,23 (0,48 - 2,95)	1115	10,70	1,62	3,54	4,24		9,40 (3,20 - 10,50)	4,27	**4,40 A+**	2,20 (0,48 - 3,16)	1100	10,30
16 + 35 + 50	1,27	2,77	3,96		8,00 (3,00 - 8,80)	3,92	**7,40 A++**	2,04 (0,52 - 2,80)	1020	9,80	1,49	3,26	4,65		9,40 (3,20 - 10,50)	4,50	**4,40 A+**	2,09 (0,51 - 3,01)	1045	9,80
16 + 35 + 60	1,15	2,52	4,33		8,00 (3,00 - 8,80)	3,92	**7,40 A++**	2,04 (0,52 - 2,80)	1020	9,80	1,35	2,96	5,09		9,40 (3,20 - 10,60)	4,50	**4,40 A+**	2,09 (0,51 - 3,07)	1045	9,80
16 + 35 + 71	1,05	2,30	4,65		8,00 (3,00 - 9,00)	3,92	**7,40 A++**	2,04 (0,52 - 2,87)	1020	9,80	1,23	2,70	5,47		9,40 (3,20 - 10,60)	4,52	**4,40 A+**	2,08 (0,51 - 3,06)	1040	9,80
16 + 42 + 42	1,28	3,36	3,36		8,00 (3,00 - 8,80)	3,59	**7,40 A++**	2,23 (0,48 - 3,10)	1115	10,70	1,50	3,95	3,95		9,40 (3,20 - 10,50)	4,29	**4,40 A+**	2,19 (0,48 - 3,15)	1095	10,30
16 + 42 + 50	1,19	3,11	3,70		8,00 (3,00 - 8,80)	3,92	**7,40 A++**	2,04 (0,52 - 2,80)	1020	9,80	1,39	3,66	4,35		9,40 (3,20 - 10,50)	4,50	**4,40 A+**	2,09 (0,51 - 3,00)	1045	9,80
16 + 42 + 60	1,08	2,85	4,07		8,00 (3,00 - 9,00)	3,92	**7,40 A++**	2,04 (0,52 - 2,87)	1020	9,80	1,27	3,35	4,78		9,40 (3,20 - 10,60)	4,50	**4,40 A+**	2,09 (0,51 - 3,06)	1045	9,80
16 + 42 + 71	0,99	2,60	4,41		8,00 (3,00 - 9,00)	4,04	**7,40 A++**	1,98 (0,52 - 2,80)	990	9,50	1,17	3,06	5,17		9,40 (3,20 - 10,60)	4,54	**4,40 A+**	2,07 (0,51 - 3,04)	1035	9,70
16 + 50 + 50	1,10	3,45	3,45		8,00 (3,00 - 8,80)	4,17	**7,40 A++**	1,92 (0,57 - 2,58)	960	9,20	1,30	4,05	4,05		9,40 (3,20 - 10,60)	4,70	**4,40 A+**	2,00 (0,57 - 2,93)	1000	9,40

Rating Conditions: Cooling Indoor 27°C DB / 19°C WB. Cooling Outdoor 35°C DB / 24°C WB. Heating Indoor 20°C DB. Heating Outdoor 7°C DB / 6°C WB. (DB: Dry Bulb; WB: Wet Bulb).
Specifications subject to change without notice. For detailed information about ErP / Energy Labelling, please visit our websites www.aircon.panasonic.eu or www.ptc.panasonic.eu.

Free Multi R32 combinations table

Free Multi 4x1 CU-4Z80TBE. Minimum capacity connected: 4,5 kW. Maximum capacity connected: 14,7 kW • R32 refrigerant

Indoor unit capacity	Cooling capacity (kW). Rooms					EER	SEER [1]	Input power rating	A.E.C.	Current	Heating capacity (kW). Rooms					COP	SCOP [1]	Input power rating	A.E.C.	Current
	A	B	C	D	Total (Min - Max)	W/W		kW	kWh	230V	A	B	C	D	Total (Min - Max)	W/W		kW	kWh	230V
16+50+60	1,02	3,17	3,81		8,00 (3,00 - 9,00)	4,17	**7,40 A++**	1,92 (0,57 - 2,65)	960	9,20	1,19	3,73	4,48		9,40 (3,20 - 10,60)	4,70	**4,40 A+**	2,00 (0,57 - 2,93)	1000	9,40
16+50+71	0,93	2,92	4,15		8,00 (3,00 - 9,00)	4,17	**7,40 A++**	1,92 (0,57 - 2,65)	960	9,20	1,10	3,43	4,87		9,40 (3,20 - 10,60)	4,72	**4,40 A+**	1,99 (0,59 - 2,92)	995	9,40
16+60+60	0,94	3,53	3,53		8,00 (3,00 - 9,00)	4,17	**7,40 A++**	1,92 (0,57 - 2,65)	960	9,20	1,10	4,15	4,15		9,40 (3,20 - 10,60)	4,70	**4,40 A+**	2,00 (0,57 - 2,93)	1000	9,40
16+60+71	0,87	3,27	3,86		8,00 (3,00 - 9,00)	4,17	**7,40 A++**	1,92 (0,57 - 2,65)	960	9,20	1,02	3,84	4,54		9,40 (3,20 - 10,60)	4,72	**4,40 A+**	1,99 (0,59 - 2,92)	995	9,40
20+20+20	2,00	2,00	2,00		6,00 (3,00 - 8,50)	4,00	**7,40 A++**	1,50 (0,48 - 3,03)	750	7,30	3,13	3,13	3,13		9,39 (3,20 - 10,40)	4,15	**4,30 A+**	2,26 (0,49 - 3,24)	1130	10,60
20+20+25	2,00	2,00	2,50		6,50 (3,00 - 8,50)	3,76	**7,40 A++**	1,73 (0,48 - 3,03)	865	8,40	2,89	2,89	3,62		9,40 (3,20 - 10,40)	4,16	**4,30 A+**	2,26 (0,49 - 3,24)	1130	10,60
20+20+35	2,00	2,00	3,50		7,50 (3,00 - 8,50)	3,64	**7,40 A++**	2,06 (0,48 - 2,95)	1030	9,90	2,51	2,51	4,38		9,40 (3,20 - 10,40)	4,22	**4,30 A+**	2,23 (0,49 - 3,20)	1115	10,50
20+20+42	1,95	1,95	4,10		8,00 (3,00 - 8,60)	3,49	**7,40 A++**	2,29 (0,48 - 3,03)	1145	11,00	2,29	2,29	4,82		9,40 (3,20 - 10,40)	4,23	**4,40 A+**	2,22 (0,48 - 3,19)	1110	10,40
20+20+50	1,78	1,78	4,44		8,00 (3,00 - 8,60)	3,92	**7,40 A++**	2,04 (0,52 - 2,65)	1020	9,80	2,09	2,09	5,22		9,40 (3,20 - 10,50)	4,45	**4,40 A+**	2,11 (0,51 - 3,03)	1055	9,90
20+20+60	1,60	1,60	4,80		8,00 (3,00 - 8,80)	3,92	**7,40 A++**	2,04 (0,52 - 2,80)	1020	9,80	1,88	1,88	5,64		9,40 (3,20 - 10,50)	4,45	**4,40 A+**	2,11 (0,51 - 3,03)	1055	9,90
20+20+71	1,44	1,44	5,12		8,00 (3,00 - 8,80)	3,92	**7,40 A++**	2,04 (0,52 - 2,72)	1020	9,80	1,69	1,69	6,02		9,40 (3,20 - 10,60)	4,48	**4,40 A+**	2,10 (0,51 - 3,08)	1050	9,90
20+25+25	2,00	2,50	2,50		7,00 (3,00 - 8,50)	3,70	**7,40 A++**	1,89 (0,48 - 3,03)	945	9,00	2,68	3,36	3,36		9,40 (3,20 - 10,40)	4,16	**4,30 A+**	2,26 (0,49 - 3,24)	1130	10,60
20+25+35	2,00	2,50	3,50		8,00 (3,00 - 8,60)	3,49	**7,40 A++**	2,29 (0,48 - 3,03)	1145	11,00	2,35	2,94	4,11		9,40 (3,20 - 10,40)	4,22	**4,40 A+**	2,23 (0,49 - 3,20)	1115	10,50
20+25+42	1,84	2,30	3,86		8,00 (3,00 - 8,60)	3,49	**7,40 A++**	2,29 (0,48 - 3,03)	1145	11,00	2,16	2,70	4,54		9,40 (3,20 - 10,50)	4,23	**4,40 A+**	2,22 (0,48 - 3,25)	1110	10,40
20+25+50	1,68	2,11	4,21		8,00 (3,00 - 8,60)	3,92	**7,40 A++**	2,04 (0,52 - 2,65)	1020	9,80	1,98	2,47	4,95		9,40 (3,20 - 10,50)	4,45	**4,40 A+**	2,11 (0,51 - 3,03)	1055	9,90
20+25+60	1,52	1,90	4,58		8,00 (3,00 - 8,80)	3,92	**7,40 A++**	2,04 (0,52 - 2,80)	1020	9,80	1,79	2,24	5,37		9,40 (3,20 - 10,50)	4,45	**4,40 A+**	2,11 (0,51 - 3,03)	1055	9,90
20+25+71	1,38	1,72	4,90		8,00 (3,00 - 8,80)	3,92	**7,40 A++**	2,04 (0,52 - 2,72)	1020	9,80	1,62	2,03	5,75		9,40 (3,20 - 10,60)	4,48	**4,40 A+**	2,10 (0,51 - 3,08)	1050	9,90
20+35+35	1,78	3,11	3,11		8,00 (3,00 - 8,60)	3,59	**7,40 A++**	2,23 (0,48 - 2,95)	1115	10,70	2,08	3,66	3,66		9,40 (3,20 - 10,50)	4,27	**4,40 A+**	2,20 (0,48 - 3,16)	1100	10,30
20+35+42	1,65	2,89	3,46		8,00 (3,00 - 8,60)	3,59	**7,40 A++**	2,23 (0,48 - 2,95)	1115	10,70	1,94	3,39	4,07		9,40 (3,20 - 10,50)	4,29	**4,40 A+**	2,19 (0,48 - 3,15)	1095	10,30
20+35+50	1,52	2,67	3,81		8,00 (3,00 - 8,80)	3,92	**7,40 A++**	2,04 (0,52 - 2,80)	1020	9,80	1,79	3,13	4,48		9,40 (3,20 - 10,50)	4,50	**4,40 A+**	2,09 (0,51 - 3,00)	1045	9,80
20+35+60	1,39	2,43	4,18		8,00 (3,00 - 8,80)	3,92	**7,40 A++**	2,04 (0,52 - 2,80)	1020	9,80	1,63	2,86	4,91		9,40 (3,20 - 10,60)	4,50	**4,40 A+**	2,09 (0,51 - 3,06)	1045	9,80
20+35+71	1,27	2,22	4,51		8,00 (3,00 - 9,00)	4,04	**7,40 A++**	1,98 (0,52 - 2,80)	990	9,50	1,49	2,61	5,30		9,40 (3,20 - 10,60)	4,54	**4,40 A+**	2,07 (0,51 - 3,04)	1035	9,70
20+42+42	1,54	3,23	3,23		8,00 (3,00 - 8,80)	3,59	**7,40 A++**	2,23 (0,48 - 3,03)	1115	10,70	1,80	3,80	3,80		9,40 (3,20 - 10,50)	4,31	**4,40 A+**	2,18 (0,48 - 3,14)	1090	10,20
20+42+50	1,43	3,00	3,57		8,00 (3,00 - 8,80)	3,92	**7,40 A++**	2,04 (0,52 - 2,72)	1020	9,80	1,68	3,53	4,19		9,40 (3,20 - 10,60)	4,52	**4,40 A+**	2,08 (0,51 - 3,05)	1040	9,80
20+42+60	1,31	2,75	3,94		8,00 (3,00 - 9,00)	3,92	**7,40 A++**	2,04 (0,52 - 2,87)	1020	9,80	1,54	3,24	4,62		9,40 (3,20 - 10,60)	4,52	**4,40 A+**	2,08 (0,51 - 3,05)	1040	9,80
20+42+71	1,20	2,53	4,27		8,00 (3,00 - 9,00)	4,04	**7,40 A++**	1,98 (0,52 - 2,80)	990	9,50	1,41	2,97	5,02		9,40 (3,20 - 10,60)	4,54	**4,40 A+**	2,07 (0,52 - 3,03)	1035	9,70
20+50+50	1,33	3,33	3,33		7,99 (3,00 - 9,00)	4,16	**7,40 A++**	1,92 (0,57 - 2,65)	960	9,20	1,56	3,92	3,92		9,40 (3,20 - 10,60)	4,72	**4,40 A+**	1,99 (0,59 - 2,92)	995	9,40
20+50+60	1,23	3,08	3,69		8,00 (3,00 - 9,00)	4,17	**7,40 A++**	1,92 (0,57 - 2,65)	960	9,20	1,45	3,62	4,33		9,40 (3,20 - 10,60)	4,72	**4,40 A+**	1,99 (0,59 - 2,92)	995	9,40
20+50+71	1,13	2,84	4,03		8,00 (3,00 - 9,00)	4,17	**7,40 A++**	1,92 (0,57 - 2,65)	960	9,20	1,33	3,33	4,74		9,40 (3,20 - 10,60)	4,75	**4,40 A+**	1,98 (0,60 - 2,91)	990	9,30
20+60+60	1,14	3,43	3,43		8,00 (3,00 - 9,00)	4,17	**7,40 A++**	1,92 (0,57 - 2,65)	960	9,20	1,34	4,03	4,03		9,40 (3,20 - 10,60)	4,72	**4,40 A+**	1,99 (0,59 - 2,92)	995	9,40
25+25+25	2,50	2,50	2,50		7,50 (3,00 - 8,50)	3,52	**7,40 A++**	2,13 (0,48 - 3,03)	1065	10,20	3,13	3,13	3,13		9,39 (3,20 - 10,40)	4,15	**4,30 A+**	2,26 (0,49 - 3,24)	1130	10,60
25+25+35	2,35	2,35	3,30		8,00 (3,00 - 8,60)	3,49	**7,40 A++**	2,29 (0,48 - 3,03)	1145	11,00	2,76	2,76	3,88		9,40 (3,20 - 10,40)	4,22	**4,40 A+**	2,23 (0,49 - 3,20)	1115	10,50
25+25+42	2,17	2,17	3,66		8,00 (3,00 - 8,60)	3,49	**7,40 A++**	2,29 (0,48 - 3,03)	1145	11,00	2,55	2,55	4,30		9,40 (3,20 - 10,50)	4,23	**4,40 A+**	2,22 (0,48 - 3,25)	1110	10,40
25+25+50	2,00	2,00	4,00		8,00 (3,00 - 8,80)	3,92	**7,40 A++**	2,04 (0,52 - 2,80)	1020	9,80	2,35	2,35	4,70		9,40 (3,20 - 10,50)	4,45	**4,40 A+**	2,11 (0,51 - 3,03)	1055	9,90
25+25+60	1,82	1,82	4,36		8,00 (3,00 - 8,80)	3,92	**7,40 A++**	2,04 (0,52 - 2,80)	1020	9,80	2,14	2,14	5,12		9,40 (3,20 - 10,50)	4,45	**4,40 A+**	2,11 (0,51 - 3,03)	1055	9,90
25+25+71	1,65	1,65	4,70		8,00 (3,00 - 9,00)	3,92	**7,40 A++**	2,04 (0,52 - 2,87)	1020	9,80	1,94	1,94	5,52		9,40 (3,20 - 10,60)	4,48	**4,40 A+**	2,10 (0,51 - 3,08)	1050	9,90
25+35+35	2,10	2,95	2,95		8,00 (3,00 - 8,60)	3,59	**7,40 A++**	2,23 (0,48 - 2,95)	1115	10,70	2,48	3,46	3,46		9,40 (3,20 - 10,50)	4,27	**4,40 A+**	2,20 (0,48 - 3,16)	1100	10,30
25+35+42	1,96	2,75	3,29		8,00 (3,00 - 8,80)	3,59	**7,40 A++**	2,23 (0,48 - 3,10)	1115	10,70	2,30	3,23	3,87		9,40 (3,20 - 10,50)	4,29	**4,40 A+**	2,19 (0,48 - 3,15)	1095	10,30
25+35+50	1,82	2,55	3,63		8,00 (3,00 - 8,80)	3,92	**7,40 A++**	2,04 (0,52 - 2,80)	1020	9,80	2,14	2,99	4,27		9,40 (3,20 - 10,50)	4,50	**4,40 A+**	2,09 (0,51 - 3,00)	1045	9,80
25+35+60	1,67	2,33	4,00		8,00 (3,00 - 9,00)	3,92	**7,40 A++**	2,04 (0,52 - 2,87)	1020	9,80	1,96	2,74	4,70		9,40 (3,20 - 10,60)	4,50	**4,40 A+**	2,09 (0,51 - 3,06)	1045	9,80
25+35+71	1,53	2,14	4,33		8,00 (3,00 - 9,00)	4,04	**7,40 A++**	1,98 (0,52 - 2,80)	990	9,50	1,79	2,51	5,10		9,40 (3,20 - 10,60)	4,54	**4,40 A+**	2,07 (0,51 - 3,04)	1035	9,70
25+42+42	1,84	3,08	3,08		8,00 (3,00 - 8,80)	3,59	**7,40 A++**	2,23 (0,48 - 3,03)	1115	10,70	2,16	3,62	3,62		9,40 (3,20 - 10,50)	4,31	**4,40 A+**	2,18 (0,48 - 3,14)	1090	10,20
25+42+50	1,71	2,87	3,42		8,00 (3,00 - 8,80)	3,92	**7,40 A++**	2,04 (0,52 - 2,72)	1020	9,80	2,01	3,37	4,02		9,40 (3,20 - 10,60)	4,52	**4,40 A+**	2,08 (0,51 - 3,05)	1040	9,80
25+42+60	1,57	2,65	3,78		8,00 (3,00 - 9,00)	3,92	**7,40 A++**	2,04 (0,52 - 2,87)	1020	9,80	1,85	3,11	4,44		9,40 (3,20 - 10,60)	4,52	**4,40 A+**	2,08 (0,51 - 3,05)	1040	9,80
25+42+71	1,45	2,43	4,12		8,00 (3,00 - 9,00)	4,04	**7,40 A++**	1,98 (0,52 - 2,80)	990	9,50	1,70	2,86	4,84		9,40 (3,20 - 10,60)	4,54	**4,40 A+**	2,07 (0,52 - 3,03)	1035	9,70
25+50+50	1,60	3,20	3,20		8,00 (3,00 - 9,00)	4,17	**7,40 A++**	1,92 (0,57 - 2,65)	960	9,20	1,88	3,76	3,76		9,40 (3,20 - 10,60)	4,72	**4,40 A+**	1,99 (0,59 - 2,92)	995	9,40
25+50+60	1,48	2,96	3,56		8,00 (3,00 - 9,00)	4,17	**7,40 A++**	1,92 (0,57 - 2,65)	960	9,20	1,74	3,48	4,18		9,40 (3,20 - 10,60)	4,72	**4,40 A+**	1,99 (0,59 - 2,92)	995	9,40
25+50+71	1,37	2,74	3,89		8,00 (3,00 - 9,00)	4,17	**7,40 A++**	1,92 (0,57 - 2,65)	960	9,20	1,61	3,22	4,57		9,40 (3,20 - 10,60)	4,75	**4,40 A+**	1,98 (0,60 - 2,91)	990	9,30
25+60+60	1,38	3,31	3,31		8,00 (3,00 - 9,00)	4,17	**7,40 A++**	1,92 (0,57 - 2,65)	960	9,20	1,62	3,89	3,89		9,40 (3,20 - 10,60)	4,72	**4,40 A+**	1,99 (0,59 - 2,92)	995	9,40
35+35+35	2,66	2,66	2,66		7,98 (3,00 - 8,80)	3,68	**7,40 A++**	2,17 (0,48 - 3,03)	1085	10,40	3,13	3,13	3,13		9,39 (3,20 - 10,50)	4,31	**4,40 A+**	2,18 (0,48 - 3,13)	1090	10,20
35+35+42	2,50	2,50	3,00		8,00 (3,00 - 8,80)	3,69	**7,40 A++**	2,17 (0,48 - 3,03)	1085	10,40	2,94	2,94	3,52		9,40 (3,20 - 10,60)	4,33	**4,40 A+**	2,17 (0,48 - 3,17)	1085	10,20
35+35+50	2,33	2,33	3,33		7,99 (3,00 - 9,00)	4,04	**7,40 A++**	1,98 (0,52 - 2,87)	990	9,50	2,74	2,74	3,92		9,40 (3,20 - 10,60)	4,56	**4,40 A+**	2,06 (0,52 - 3,03)	1030	9,70
35+35+60	2,15	2,15	3,70		8,00 (3,00 - 9,00)	4,04	**7,40 A++**	1,98 (0,52 - 2,87)	990	9,50	2,53	2,53	4,34		9,40 (3,20 - 10,60)	4,56	**4,40 A+**	2,06 (0,52 - 3,03)	1030	9,70
35+35+71	1,99	1,99	4,02		8,00 (3,00 - 9,00)	4,04	**7,40 A++**	1,98 (0,52 - 2,80)	990	9,50	2,33	2,33	4,74		9,40 (3,20 - 10,60)	4,59	**4,40 A+**	2,05 (0,52 - 3,01)	1025	9,60
35+42+42	2,36	2,82	2,82		8,00 (3,00 - 9,00)	3,69	**7,40 A++**	2,17 (0,48 - 3,10)	1085	10,40	2,76	3,32	3,32		9,40 (3,20 - 10,60)	4,35	**4,40 A+**	2,16 (0,48 - 3,16)	1080	10,20
35+42+50	2,20	2,65	3,15		8,00 (3,00 - 9,00)	4,04	**7,40 A++**	1,98 (0,52 - 2,80)	990	9,50	2,59	3,11	3,70		9,40 (3,20 - 10,60)	4,59	**4,40 A+**	2,05 (0,52 - 3,02)	1025	9,60
35+42+60	2,04	2,45	3,51		8,00 (3,00 - 9,00)	4,04	**7,40 A++**	1,98 (0,52 - 2,80)	990	9,50	2,40	2,88	4,12		9,40 (3,20 - 10,60)	4,59	**4,40 A+**	2,05 (0,52 - 3,02)	1025	9,60
35+50+50	2,08	2,96	2,96		8,00 (3,00 - 9,00)	4,17	**7,40 A++**	1,92 (0,57 - 2,65)	960	9,20	2,44	3,48	3,48		9,40 (3,20 - 10,60)	4,77	**4,40 A+**	1,97 (0,60 - 2,89)	985	9,30
35+50+60	1,93	2,76	3,31		8,00 (3,00 - 9,00)	4,17	**7,40 A++**	1,92 (0,57 - 2,65)	960	9,20	2,27	3,24	3,89		9,40 (3,20 - 10,60)	4,77	**4,40 A+**	1,97 (0,60 - 2,89)	985	9,30
42+42+42	2,66	2,66	2,66		7,98 (3,00 - 9,00)	3,68	**7,40 A++**	2,17 (0,48 - 3,10)	1085	10,40	3,13	3,13	3,13		9,39 (3,20 - 10,60)	4,37	**4,40 A+**	2,15 (0,48 - 3,15)	1075	10,10
42+42+50	2,51	2,51	2,98		8,00 (3,00 - 9,00)	4,04	**7,40 A++**	1,98 (0,52 - 2,80)	990	9,50	2,95	2,95	3,50		9,40 (3,20 - 10,60)	4,59	**4,40 A+**	2,05 (0,54 - 3,00)	1025	9,60
42+42+60	2,33	2,33	3,33		7,99 (3,00 - 9,00)	4,04	**7,40 A++**	1,98 (0,52 - 2,80)	990	9,50	2,74	2,74	3,92		9,40 (3,20 - 10,60)	4,59	**4,40 A+**	2,05 (0,54 - 3,00)	1025	9,60
42+50+50	2,36	2,82	2,82		8,00 (3,00 - 9,00)	4,17	**7,40 A++**	1,92 (0,57 - 2,65)	960	9,20	2,78	3,31	3,31		9,40 (3,20 - 10,60)	4,77	**4,40 A+**	1,97 (0,61 - 2,88)	985	9,30
4 Rooms																				
16+16+16+16	1,60	1,60	1,60	1,60	6,40 (3,00 - 9,20)	4,30	**8,50 A+++**	1,49 (0,52 - 2,95)	745	7,20	2,35	2,35	2,35	2,35	9,40 (4,20 - 10,60)	4,54	**4,60 A++**	2,07 (0,68 - 3,03)	1035	9,70
16+16+16+20	1,60	1,60	1,60	2,00	6,80 (3,00 - 9,20)	4,28	**8,50 A+++**	1,59 (0,52 - 2,87)	795	7,70	2,21	2,21	2,21	2,77	9,40 (4,20 - 10,60)	4,56	**4,60 A++**	2,06 (0,68 - 3,02)	1030	9,70
16+16+16+25	1,60	1,60	1,60	2,50	7,30 (3,00 - 9,20)	4,15	**7,90 A++**	1,76 (0,52 - 2,87)	880	8,40	2,06	2,06	2,06	3,22	9,40 (4,20 - 10,60)	4,56	**4,60 A++**	2,06 (0,68 - 3,02)	1030	9,70
16+16+16+35	1,54	1,54	1,54	3,38	8,00 (3,00 - 9,20)	4,04	**7,90 A++**	1,98 (0,53 - 2,87)	990	9,50	1,81	1,81	1,81	3,97	9,40 (4,20 - 10,60)	4,61	**4,70 A++**	2,04 (0,69 - 2,99)	1020	9,60
16+16+16+42	1,42	1,42	1,42	3,74	8,00 (3,00 - 9,20)	4,04	**7,90 A++**	1,98 (0,53 - 2,87)	990	9,50	1,67	1,67	1,67	4,39	9,40 (4,20 - 10,60)	4,63	**4,70 A++**	2,03 (0,69 - 2,98)	1015	9,50
16+16+16+50	1,31	1,31	1,31	4,07	8,00 (3,00 - 9,20)	4,28	**7,90 A++**	1,87 (0,62 - 2,73)	935	9,00	1,53	1,53	1,53	4,81	9,40 (4,20 - 10,60)	4,70	**4,70 A++**	2,00 (0,76 - 2,86)	1000	9,40
16+16+16+60	1,19	1,19	1,19	4,43	8,00 (3,00 - 9,20)	4,28	**7,90 A++**	1,87 (0,62 - 2,73)	935	9,00	1,39	1,39	1,39	5,23	9,40 (4,20 - 10,60)	4,70	**4,70 A++**	2,00 (0,76 - 2,86)	1000	9,40
16+16+16+71	1,08	1,08	1,08	4,76	8,00 (3,00 - 9,20)	4,28	**7,90 A++**	1,87 (0,62 - 2,66)	935	9,00	1,26	1,26	1,26	5,62	9,40 (4,20 - 10,60)	4,72	**4,70 A++**	1,99 (0,77 - 2,85)	995	9,40
16+16+20+20	1,60	1,60	2,00	2,00	7,20 (3,00 - 9,20)	4,24	**7,90 A++**	1,70 (0,53 - 2,87)	850	8,20	2,09	2,09	2,61	2,61	9,40 (4,20 - 10,60)	4,59	**4,60 A++**	2,05 (0,68 - 3,01)	1025	9,60
16+16+20+25	1,60	1,60	2,00	2,50	7,70 (3,00 - 9,20)	4,14	**7,90 A++**	1,86 (0,53 - 2,87)	930	8,90	1,95	1,95	2,44	3,06	9,40 (4,20 - 10,60)	4,59	**4,60 A++**	2,05 (0,68 - 3,01)	1025	9,60
16+16+20+35	1,47	1,47	1,84	3,22	8,00 (3,00 - 9,20)	4,17	**7,90 A++**	1,92 (0,53 - 2,87)	960	9,20	1,73	1,73	2,16	3,78	9,40 (4,20 - 10,60)	4,63	**4,70 A++**	2,03 (0,69 - 2,98)	1015	9,50
16+16+20+42	1,36	1,36	1,70	3,58	8,00 (3,00 - 9,20)	4,17	**7,90 A++**	1,92 (0,56 - 2,87)	960	9,20	1,60	1,60	2,00	4,20	9,40 (4,20 - 10,60)	4,65	**4,70 A++**	2,02 (0,71 - 2,97)	1010	9,50
16+16+20+50	1,25	1,25	1,57	3,93	8,00 (3,00 - 9,20)	4,28	**7,90 A++**	1,87 (0,62 - 2,65)	935	9,00	1,47	1,47	1,84	4,62	9,40 (4,20 - 10,60)	4,72	**4,70 A++**	1,99 (0,77 - 2,85)	995	9,40
16+16+20+60	1,14	1,14	1,43	4,29	8,00 (3,00 - 9,20)	4,28	**7,90 A++**	1,87 (0,62 - 2,65)	935	9,00	1,34	1,34	1,68	5,04	9,40 (4,20 - 10,60)	4,72	**4,70 A++**	1,99 (0,77 - 2,85)	995	9,40

Free Multi 4x1 CU-4Z80TBE. Minimum capacity connected: 4,5 kW. Maximum capacity connected: 14,7 kW • R32 refrigerant

Indoor unit capacity	Cooling capacity (kW). Rooms					EER	SEER [1]	Input power rating	A.E.C.	Current	Heating capacity (kW). Rooms					COP	SCOP [1]	Input power rating	A.E.C.	Current
	A	B	C	D	Total (Min - Max)	W/W		kW	kWh	230V	A	B	C	D	Total (Min - Max)	W/W		kW	kWh	230V
16+16+20+71	1,04	1,04	1,30	4,62	8,00 (3,00 - 9,20)	4,28	**7,90 A++**	1,87 (0,62 - 2,66)	935	9,00	1,22	1,22	1,53	5,43	9,40 (4,20 - 10,60)	4,75	**4,70 A++**	1,98 (0,79 - 2,90)	990	9,30
16+16+25+25	1,56	1,56	2,44	2,44	8,00 (3,00 - 9,20)	4,04	**7,90 A++**	1,98 (0,53 - 2,87)	990	9,50	1,83	1,83	2,87	2,87	9,40 (4,20 - 10,60)	4,59	**4,70 A++**	2,05 (0,68 - 3,01)	1025	9,60
16+16+25+35	1,39	1,39	2,17	3,05	8,00 (3,00 - 9,20)	4,17	**7,90 A++**	1,92 (0,53 - 2,87)	960	9,20	1,63	1,63	2,55	3,59	9,40 (4,20 - 10,60)	4,63	**4,70 A++**	2,03 (0,69 - 2,98)	1015	9,50
16+16+25+42	1,29	1,29	2,02	3,40	8,00 (3,00 - 9,20)	4,17	**7,90 A++**	1,92 (0,56 - 2,87)	960	9,20	1,52	1,52	2,37	3,99	9,40 (4,20 - 10,60)	4,65	**4,70 A++**	2,02 (0,71 - 2,97)	1010	9,50
16+16+25+50	1,20	1,20	1,87	3,73	8,00 (3,00 - 9,20)	4,28	**7,90 A++**	1,87 (0,62 - 2,65)	935	9,00	1,41	1,41	2,20	4,38	9,40 (4,20 - 10,60)	4,72	**4,70 A++**	1,99 (0,77 - 2,85)	995	9,40
16+16+25+60	1,09	1,09	1,71	4,11	8,00 (3,00 - 9,20)	4,28	**7,90 A++**	1,87 (0,62 - 2,65)	935	9,00	1,29	1,29	2,01	4,81	9,40 (4,20 - 10,60)	4,72	**4,70 A++**	1,99 (0,77 - 2,85)	995	9,40
16+16+25+71	1,00	1,00	1,56	4,44	8,00 (3,00 - 9,20)	4,28	**7,90 A++**	1,87 (0,62 - 2,66)	935	9,00	1,18	1,18	1,84	5,20	9,40 (4,20 - 10,60)	4,75	**4,70 A++**	1,98 (0,79 - 2,90)	990	9,30
16+16+35+35	1,25	1,25	2,75	2,75	8,00 (3,00 - 9,20)	4,17	**7,90 A++**	1,92 (0,57 - 2,80)	960	9,20	1,47	1,47	3,23	3,23	9,40 (4,20 - 10,60)	4,68	**4,70 A++**	2,01 (0,72 - 2,95)	1005	9,40
16+16+35+42	1,17	1,17	2,57	3,09	8,00 (3,00 - 9,20)	4,17	**7,90 A++**	1,92 (0,57 - 2,80)	960	9,20	1,38	1,38	3,02	3,62	9,40 (4,20 - 10,60)	4,70	**4,70 A++**	2,00 (0,72 - 2,94)	1000	9,40
16+16+35+50	1,09	1,09	2,39	3,43	8,00 (3,00 - 9,20)	4,28	**7,90 A++**	1,87 (0,62 - 2,66)	935	9,00	1,29	1,29	2,81	4,01	9,40 (4,20 - 10,60)	4,75	**4,70 A++**	1,98 (0,80 - 2,89)	990	9,30
16+16+35+60	1,01	1,01	2,20	3,78	8,00 (3,00 - 9,20)	4,28	**7,90 A++**	1,87 (0,62 - 2,66)	935	9,00	1,18	1,18	2,59	4,45	9,40 (4,20 - 10,60)	4,75	**4,70 A++**	1,98 (0,80 - 2,89)	990	9,30
16+16+35+71	0,93	0,93	2,03	4,11	8,00 (3,00 - 9,20)	4,28	**7,90 A++**	1,87 (0,63 - 2,66)	935	9,00	1,09	1,09	2,38	4,84	9,40 (4,20 - 10,60)	4,77	**4,70 A++**	1,97 (0,80 - 2,87)	985	9,30
16+16+42+42	1,10	1,10	2,90	2,90	8,00 (3,00 - 9,20)	4,17	**7,90 A++**	1,92 (0,57 - 2,80)	960	9,20	1,30	1,30	3,40	3,40	9,40 (4,20 - 10,60)	4,70	**4,70 A++**	2,00 (0,72 - 2,93)	1000	9,40
16+16+42+50	1,03	1,03	2,71	3,23	8,00 (3,00 - 9,20)	4,28	**7,90 A++**	1,87 (0,62 - 2,66)	935	9,00	1,21	1,21	3,18	3,80	9,40 (4,20 - 10,60)	4,77	**4,70 A++**	1,97 (0,80 - 2,88)	985	9,30
16+16+42+60	0,96	0,96	2,51	3,57	8,00 (3,00 - 9,20)	4,28	**7,90 A++**	1,87 (0,62 - 2,66)	935	9,00	1,12	1,12	2,95	4,21	9,40 (4,20 - 10,60)	4,77	**4,70 A++**	1,97 (0,80 - 2,88)	985	9,30
16+16+42+71	0,88	0,88	2,32	3,92	8,00 (3,00 - 9,20)	4,28	**7,90 A++**	1,87 (0,63 - 2,66)	935	9,00	1,04	1,04	2,72	4,60	9,40 (4,20 - 10,60)	4,77	**4,70 A++**	1,97 (0,81 - 2,87)	985	9,30
16+16+50+50	0,97	0,97	3,03	3,03	8,00 (3,00 - 9,20)	4,26	**7,90 A++**	1,88 (0,69 - 2,60)	940	9,00	1,14	1,14	3,56	3,56	9,40 (4,20 - 10,60)	4,68	**4,70 A++**	2,01 (0,92 - 2,85)	1005	9,40
16+16+50+60	0,90	0,90	2,82	3,38	8,00 (3,00 - 9,20)	4,26	**7,90 A++**	1,88 (0,69 - 2,60)	940	9,00	1,06	1,06	3,31	3,97	9,40 (4,20 - 10,60)	4,68	**4,70 A++**	2,01 (0,92 - 2,85)	1005	9,40
16+20+20+20	1,60	2,00	2,00	2,00	7,60 (3,00 - 9,20)	4,06	**7,90 A++**	1,87 (0,53 - 2,87)	935	9,00	1,99	2,47	2,47	2,47	9,40 (4,20 - 10,60)	4,61	**4,60 A++**	2,04 (0,69 - 3,00)	1020	9,60
16+20+20+25	1,58	1,98	1,98	2,46	8,00 (3,00 - 9,20)	4,04	**7,90 A++**	1,98 (0,53 - 2,87)	990	9,50	1,86	2,32	2,32	2,90	9,40 (4,20 - 10,60)	4,61	**4,70 A++**	2,04 (0,69 - 3,00)	1020	9,60
16+20+20+35	1,41	1,76	1,76	3,07	8,00 (3,00 - 9,20)	4,17	**7,90 A++**	1,92 (0,57 - 2,80)	960	9,20	1,65	2,07	2,07	3,61	9,40 (4,20 - 10,60)	4,65	**4,70 A++**	2,02 (0,71 - 2,97)	1010	9,50
16+20+20+42	1,31	1,63	1,63	3,43	8,00 (3,00 - 9,20)	4,17	**7,90 A++**	1,92 (0,57 - 2,80)	960	9,20	1,53	1,92	1,92	4,03	9,40 (4,20 - 10,60)	4,68	**4,70 A++**	2,01 (0,71 - 2,96)	1005	9,40
16+20+20+50	1,21	1,51	1,51	3,77	8,00 (3,00 - 9,20)	4,28	**7,90 A++**	1,87 (0,62 - 2,65)	935	9,00	1,42	1,77	1,77	4,44	9,40 (4,20 - 10,60)	4,72	**4,70 A++**	1,99 (0,79 - 2,90)	995	9,40
16+20+20+60	1,10	1,38	1,38	4,14	8,00 (3,00 - 9,20)	4,28	**7,90 A++**	1,87 (0,62 - 2,65)	935	9,00	1,30	1,62	1,62	4,86	9,40 (4,20 - 10,60)	4,72	**4,70 A++**	1,99 (0,79 - 2,90)	995	9,40
16+20+20+71	1,01	1,26	1,26	4,47	8,00 (3,00 - 9,20)	4,28	**7,90 A++**	1,87 (0,63 - 2,66)	935	9,00	1,18	1,48	1,48	5,26	9,40 (4,20 - 10,60)	4,75	**4,70 A++**	1,98 (0,80 - 2,89)	990	9,30
16+20+25+25	1,48	1,86	2,33	2,33	8,00 (3,00 - 9,20)	4,04	**7,90 A++**	1,98 (0,53 - 2,87)	990	9,50	1,75	2,19	2,73	2,73	9,40 (4,20 - 10,60)	4,61	**4,70 A++**	2,04 (0,69 - 3,00)	1020	9,60
16+20+25+35	1,33	1,67	2,08	2,92	8,00 (3,00 - 9,20)	4,17	**7,90 A++**	1,92 (0,57 - 2,80)	960	9,20	1,57	1,96	2,45	3,42	9,40 (4,20 - 10,60)	4,65	**4,70 A++**	2,02 (0,71 - 2,97)	1010	9,50
16+20+25+42	1,24	1,55	1,94	3,27	8,00 (3,00 - 9,20)	4,17	**7,90 A++**	1,92 (0,57 - 2,80)	960	9,20	1,46	1,83	2,28	3,83	9,40 (4,20 - 10,60)	4,68	**4,70 A++**	2,01 (0,71 - 2,96)	1005	9,40
16+20+25+50	1,15	1,44	1,80	3,61	8,00 (3,00 - 9,20)	4,28	**7,90 A++**	1,87 (0,62 - 2,65)	935	9,00	1,35	1,69	2,12	4,24	9,40 (4,20 - 10,60)	4,72	**4,70 A++**	1,99 (0,79 - 2,90)	995	9,40
16+20+25+60	1,06	1,32	1,65	3,97	8,00 (3,00 - 9,20)	4,28	**7,90 A++**	1,87 (0,62 - 2,65)	935	9,00	1,24	1,55	1,94	4,67	9,40 (4,20 - 10,60)	4,72	**4,70 A++**	1,99 (0,79 - 2,90)	995	9,40
16+20+25+71	0,97	1,21	1,52	4,30	8,00 (3,00 - 9,20)	4,28	**7,90 A++**	1,87 (0,63 - 2,66)	935	9,00	1,14	1,42	1,78	5,06	9,40 (4,20 - 10,60)	4,75	**4,70 A++**	1,98 (0,80 - 2,89)	990	9,30
16+20+35+35	1,21	1,51	2,64	2,64	8,00 (3,00 - 9,20)	4,17	**7,90 A++**	1,92 (0,57 - 2,80)	960	9,20	1,42	1,78	3,10	3,10	9,40 (4,20 - 10,60)	4,70	**4,70 A++**	2,00 (0,72 - 2,94)	1000	9,40
16+20+35+42	1,13	1,42	2,48	2,97	8,00 (3,00 - 9,20)	4,17	**7,90 A++**	1,92 (0,57 - 2,80)	960	9,20	1,33	1,66	2,91	3,50	9,40 (4,20 - 10,60)	4,70	**4,70 A++**	2,00 (0,72 - 2,93)	1000	9,40
16+20+35+50	1,06	1,32	2,31	3,31	8,00 (3,00 - 9,20)	4,28	**7,90 A++**	1,87 (0,63 - 2,66)	935	9,00	1,24	1,55	2,72	3,89	9,40 (4,20 - 10,60)	4,77	**4,70 A++**	1,97 (0,80 - 2,88)	985	9,30
16+20+35+60	0,98	1,22	2,14	3,66	8,00 (3,00 - 9,20)	4,28	**7,90 A++**	1,87 (0,63 - 2,66)	935	9,00	1,15	1,44	2,51	4,30	9,40 (4,20 - 10,60)	4,77	**4,70 A++**	1,97 (0,80 - 2,88)	985	9,30
16+20+35+71	0,90	1,13	1,97	4,00	8,00 (3,00 - 9,20)	4,28	**7,90 A++**	1,87 (0,63 - 2,66)	935	9,00	1,06	1,32	2,32	4,70	9,40 (4,20 - 10,60)	4,77	**4,70 A++**	1,97 (0,81 - 2,87)	985	9,30
16+20+42+42	1,07	1,33	2,80	2,80	8,00 (3,00 - 9,20)	4,17	**7,90 A++**	1,92 (0,57 - 2,80)	960	9,20	1,25	1,57	3,29	3,29	9,40 (4,20 - 10,60)	4,72	**4,70 A++**	1,99 (0,72 - 2,92)	995	9,40
16+20+42+50	1,00	1,25	2,63	3,12	8,00 (3,00 - 9,20)	4,28	**7,90 A++**	1,87 (0,63 - 2,66)	935	9,00	1,18	1,47	3,08	3,67	9,40 (4,20 - 10,60)	4,77	**4,70 A++**	1,97 (0,81 - 2,87)	985	9,30
16+20+42+60	0,93	1,16	2,43	3,48	8,00 (3,00 - 9,20)	4,28	**7,90 A++**	1,87 (0,63 - 2,66)	935	9,00	1,09	1,36	2,86	4,09	9,40 (4,20 - 10,60)	4,77	**4,70 A++**	1,97 (0,81 - 2,87)	985	9,30
16+20+50+50	0,94	1,18	2,94	2,94	8,00 (3,00 - 9,20)	4,23	**7,90 A++**	1,89 (0,69 - 2,60)	945	9,00	1,10	1,38	3,46	3,46	9,40 (4,20 - 10,60)	4,68	**4,70 A++**	2,01 (0,93 - 2,90)	1005	9,40
16+20+50+60	0,88	1,10	2,74	3,28	8,00 (3,00 - 9,20)	4,23	**7,90 A++**	1,89 (0,69 - 2,60)	945	9,00	1,03	1,29	3,22	3,86	9,40 (4,20 - 10,60)	4,68	**4,70 A++**	2,01 (0,93 - 2,90)	1005	9,40
16+25+25+25	1,40	2,20	2,20	2,20	8,00 (3,00 - 9,20)	4,04	**7,90 A++**	1,98 (0,53 - 2,87)	990	9,50	1,66	2,58	2,58	2,58	9,40 (4,20 - 10,60)	4,61	**4,70 A++**	2,04 (0,69 - 3,00)	1020	9,60
16+25+25+35	1,27	1,98	1,98	2,77	8,00 (3,00 - 9,20)	4,17	**7,90 A++**	1,92 (0,57 - 2,80)	960	9,20	1,49	2,33	2,33	3,25	9,40 (4,20 - 10,60)	4,65	**4,70 A++**	2,02 (0,71 - 2,97)	1010	9,50
16+25+25+42	1,19	1,85	1,85	3,11	8,00 (3,00 - 9,20)	4,17	**7,90 A++**	1,92 (0,57 - 2,80)	960	9,20	1,39	2,18	2,18	3,65	9,40 (4,20 - 10,60)	4,68	**4,70 A++**	2,01 (0,71 - 2,96)	1005	9,40
16+25+25+50	1,10	1,72	1,72	3,46	8,00 (3,00 - 9,20)	4,28	**7,90 A++**	1,87 (0,62 - 2,65)	935	9,00	1,30	2,03	2,03	4,04	9,40 (4,20 - 10,60)	4,72	**4,70 A++**	1,99 (0,79 - 2,90)	995	9,40
16+25+25+60	1,02	1,59	1,59	3,80	8,00 (3,00 - 9,20)	4,28	**7,90 A++**	1,87 (0,62 - 2,65)	935	9,00	1,19	1,87	1,87	4,47	9,40 (4,20 - 10,60)	4,72	**4,70 A++**	1,99 (0,79 - 2,90)	995	9,40
16+25+25+71	0,93	1,46	1,46	4,15	8,00 (3,00 - 9,20)	4,28	**7,90 A++**	1,87 (0,63 - 2,66)	935	9,00	1,10	1,72	1,72	4,86	9,40 (4,20 - 10,60)	4,75	**4,70 A++**	1,98 (0,80 - 2,89)	990	9,30
16+25+35+35	1,15	1,81	2,52	2,52	8,00 (3,00 - 9,20)	4,17	**7,90 A++**	1,92 (0,57 - 2,80)	960	9,20	1,35	2,13	2,96	2,96	9,40 (4,20 - 10,60)	4,70	**4,70 A++**	2,00 (0,72 - 2,94)	1000	9,40
16+25+35+42	1,08	1,69	2,37	2,86	8,00 (3,00 - 9,20)	4,17	**7,90 A++**	1,92 (0,57 - 2,80)	960	9,20	1,27	1,99	2,79	3,35	9,40 (4,20 - 10,60)	4,70	**4,70 A++**	2,00 (0,72 - 2,93)	1000	9,40
16+25+35+50	1,02	1,59	2,22	3,17	8,00 (3,00 - 9,20)	4,28	**7,90 A++**	1,87 (0,63 - 2,66)	935	9,00	1,19	1,87	2,61	3,73	9,40 (4,20 - 10,60)	4,77	**4,70 A++**	1,97 (0,80 - 2,88)	985	9,30
16+25+35+60	0,94	1,47	2,06	3,53	8,00 (3,00 - 9,20)	4,28	**7,90 A++**	1,87 (0,63 - 2,66)	935	9,00	1,10	1,73	2,42	4,15	9,40 (4,20 - 10,60)	4,77	**4,70 A++**	1,97 (0,80 - 2,88)	985	9,30
16+25+35+71	0,87	1,36	1,90	3,87	8,00 (3,00 - 9,20)	4,28	**7,90 A++**	1,87 (0,63 - 2,66)	935	9,00	1,02	1,60	2,24	4,54	9,40 (4,20 - 10,60)	4,77	**4,70 A++**	1,97 (0,81 - 2,87)	985	9,30
16+25+42+42	1,02	1,60	2,69	2,69	8,00 (3,00 - 9,20)	4,17	**7,90 A++**	1,92 (0,57 - 2,80)	960	9,20	1,20	1,88	3,16	3,16	9,40 (4,20 - 10,60)	4,72	**4,70 A++**	1,99 (0,72 - 2,92)	995	9,40
16+25+42+50	0,96	1,50	2,53	3,01	8,00 (3,00 - 9,20)	4,28	**7,90 A++**	1,87 (0,63 - 2,66)	935	9,00	1,13	1,77	2,97	3,53	9,40 (4,20 - 10,60)	4,77	**4,70 A++**	1,97 (0,81 - 2,87)	985	9,30
16+25+42+60	0,90	1,40	2,35	3,35	8,00 (3,00 - 9,20)	4,28	**7,90 A++**	1,87 (0,63 - 2,66)	935	9,00	1,05	1,64	2,76	3,95	9,40 (4,20 - 10,60)	4,77	**4,70 A++**	1,97 (0,81 - 2,87)	985	9,30
16+25+50+50	0,90	1,42	2,84	2,84	8,00 (3,00 - 9,20)	4,23	**7,90 A++**	1,89 (0,69 - 2,60)	945	9,00	1,07	1,67	3,33	3,33	9,40 (4,20 - 10,60)	4,68	**4,70 A++**	2,01 (0,93 - 2,90)	1005	9,40
16+35+35+35	1,07	2,31	2,31	2,31	8,00 (3,00 - 9,20)	4,17	**7,90 A++**	1,92 (0,57 - 2,80)	960	9,20	1,24	2,72	2,72	2,72	9,40 (4,20 - 10,60)	4,75	**4,70 A++**	1,98 (0,72 - 2,91)	990	9,30
16+35+35+42	1,00	2,19	2,19	2,62	8,00 (3,00 - 9,20)	4,17	**7,90 A++**	1,92 (0,57 - 2,72)	960	9,20	1,18	2,57	2,57	3,08	9,40 (4,20 - 10,60)	4,75	**4,70 A++**	1,98 (0,75 - 2,90)	990	9,30
16+35+35+50	0,94	2,06	2,06	2,94	8,00 (3,00 - 9,20)	4,28	**7,90 A++**	1,87 (0,63 - 2,66)	935	9,00	1,11	2,42	2,42	3,45	9,40 (4,20 - 10,60)	4,70	**4,70 A++**	2,00 (0,84 - 2,86)	1000	9,40
16+35+35+60	0,88	1,92	1,92	3,28	8,00 (3,00 - 9,20)	4,28	**7,90 A++**	1,87 (0,63 - 2,66)	935	9,00	1,03	2,25	2,25	3,87	9,40 (4,20 - 10,60)	4,70	**4,70 A++**	2,00 (0,84 - 2,86)	1000	9,40
16+35+42+42	0,95	2,07	2,49	2,49	8,00 (3,00 - 9,20)	4,17	**7,90 A++**	1,92 (0,57 - 2,72)	960	9,20	1,11	2,45	2,92	2,92	9,40 (4,20 - 10,60)	4,77	**4,70 A++**	1,97 (0,75 - 2,89)	985	9,30
16+35+42+50	0,90	1,96	2,35	2,79	8,00 (3,00 - 9,20)	4,28	**7,90 A++**	1,87 (0,63 - 2,66)	935	9,00	1,05	2,30	2,76	3,29	9,40 (4,20 - 10,60)	4,70	**4,70 A++**	2,00 (0,84 - 2,85)	1000	9,40
16+42+42+42	0,89	2,37	2,37	2,37	8,00 (3,00 - 9,20)	4,17	**7,90 A++**	1,92 (0,57 - 2,72)	960	9,20	1,06	2,78	2,78	2,78	9,40 (4,20 - 10,60)	4,77	**4,70 A++**	1,97 (0,76 - 2,88)	985	9,30
20+20+20+20	2,00	2,00	2,00	2,00	8,00 (3,00 - 9,20)	4,04	**7,90 A++**	1,98 (0,53 - 2,87)	990	9,50	2,35	2,35	2,35	2,35	9,40 (4,20 - 10,60)	4,63	**4,70 A++**	2,03 (0,69 - 2,99)	1015	9,50
20+20+20+25	1,88	1,88	1,88	2,36	8,00 (3,00 - 9,20)	4,04	**7,90 A++**	1,98 (0,53 - 2,87)	990	9,50	2,21	2,21	2,21	2,77	9,40 (4,20 - 10,60)	4,63	**4,70 A++**	2,03 (0,69 - 2,99)	1015	9,50
20+20+20+35	1,68	1,68	1,68	2,96	8,00 (3,00 - 9,20)	4,17	**7,90 A++**	1,92 (0,57 - 2,80)	960	9,20	1,98	1,98	1,98	3,46	9,40 (4,20 - 10,60)	4,68	**4,70 A++**	2,01 (0,71 - 2,96)	1005	9,40
20+20+20+42	1,57	1,57	1,57	3,29	8,00 (3,00 - 9,20)	4,17	**7,90 A++**	1,92 (0,57 - 2,80)	960	9,20	1,84	1,84	1,84	3,88	9,40 (4,20 - 10,60)	4,68	**4,70 A++**	2,01 (0,72 - 2,95)	1005	9,40
20+20+20+50	1,45	1,45	1,45	3,65	8,00 (3,00 - 9,20)	4,28	**7,90 A++**	1,87 (0,62 - 2,65)	935	9,00	1,71	1,71	1,71	4,27	9,40 (4,20 - 10,60)	4,75	**4,70 A++**	1,98 (0,80 - 2,89)	990	9,30
20+20+20+60	1,33	1,33	1,33	4,01	8,00 (3,00 - 9,20)	4,28	**7,90 A++**	1,87 (0,62 - 2,65)	935	9,00	1,57	1,57	1,57	4,69	9,40 (4,20 - 10,60)	4,75	**4,70 A++**	1,98 (0,80 - 2,89)	990	9,30
20+20+20+71	1,22	1,22	1,22	4,34	8,00 (3,00 - 9,20)	4,28	**7,90 A++**	1,87 (0,63 - 2,66)	935	9,00	1,44	1,44	1,44	5,08	9,40 (4,20 - 10,60)	4,77	**4,70 A++**	1,97 (0,80 - 2,88)	985	9,30
20+20+25+25	1,78	1,78	2,22	2,22	8,00 (3,00 - 9,20)	4,04	**7,90 A++**	1,98 (0,53 - 2,87)	990	9,50	2,09	2,09	2,61	2,61	9,40 (4,20 - 10,60)	4,63	**4,70 A++**	2,03 (0,69 - 2,99)	1015	9,50
20+20+25+35	1,60	1,60	2,00	2,80	8,00 (3,00 - 9,20)	4,17	**7,90 A++**	1,92 (0,57 - 2,80)	960	9,20	1,88	1,88	2,35	3,29	9,40 (4,20 - 10,60)	4,68	**4,70 A++**	2,01 (0,71 - 2,96)	1005	9,40
20+20+25+42	1,50	1,50	1,87	3,13	8,00 (3,00 - 9,20)	4,17	**7,90 A++**	1,92 (0,57 - 2,80)	960	9,20	1,76	1,76	2,20	3,68	9,40 (4,20 - 10,60)	4,68	**4,70 A++**	2,01 (0,72 - 2,95)	1005	9,40
20+20+25+50	1,39	1,39	1,74	3,48	8,00 (3,00 - 9,20)	4,28	**7,90 A++**	1,87 (0,62 - 2,65)	935	9,00	1,63	1,63	2,04	4,10	9,40 (4,20 - 10,60)	4,75	**4,70 A++**	1,98 (0,80 - 2,89)	990	9,30
20+20+25+60	1,28	1,28	1,60	3,84	8,00 (3,00 - 9,20)	4,28	**7,90 A++**	1,87 (0,62 - 2,65)	935	9,00	1,50	1,50	1,88	4,52	9,40 (4,20 - 10,60)	4,75	**4,70 A++**	1,98 (0,80 - 2,89)	990	9,30
20+20+25+71	1,18	1,18	1,47	4,17	8,00 (3,00 - 9,20)	4,28	**7,90 A++**	1,87 (0,63 - 2,66)	935	9,00	1,38	1,38	1,73	4,91	9,40 (4,20 - 10,60)	4,77	**4,70 A++**	1,97 (0,80 - 2,88)	985	9,30
20+20+35+35	1,45	1,45	2,55	2,55	8,00 (3,00 - 9,20)	4,17	**7,90 A++**	1,92 (0,57 - 2,80)	960	9,20	1,71	1,71	2,99	2,99	9,40 (4,20 - 10,60)	4,70	**4,70 A++**	2,00 (0,72 - 2,93)	1000	9,40
20+20+35+42	1,37	1,37	2,39	2,87	8,00 (3,00 - 9,20)	4,17	**7,90 A++**	1,92 (0,57 - 2,80)	960	9,20	1,61	1,61	2,81	3,37	9,40 (4,20 - 10,60)	4,72	**4,70 A++**	1,99 (0,72 - 2,92)	995	9,40

Rating Conditions: Cooling Indoor 27°C DB / 19°C WB. Cooling Outdoor 35°C DB / 24°C WB. Heating Indoor 20°C DB. Heating Outdoor 7°C DB / 6°C WB. (DB: Dry Bulb; WB: Wet Bulb).
Specifications subject to change without notice. For detailed information about ErP / Energy Labelling, please visit our websites www.aircon.panasonic.eu or www.ptc.panasonic.eu.

Free Multi R32 combinations table

Free Multi 4x1 CU-4Z80TBE. Minimum capacity connected: 4,5 kW. Maximum capacity connected: 14,7 kW • R32 refrigerant

Indoor unit capacity	Cooling capacity (kW). Rooms					EER	SEER [1]	Input power rating	A.E.C.	Current	Heating capacity (kW). Rooms					COP	SCOP [1]	Input power rating	A.E.C.	Current
	A	B	C	D	Total (Min - Max)	W/W		kW	kWh	230V	A	B	C	D	Total (Min - Max)	W/W		kW	kWh	230V
20+20+35+50	1,28	1,28	2,24	3,20	8,00 (3,00 - 9,20)	4,28	**7,90 A++**	1,87 (0,63 - 2,66)	935	9,00	1,50	1,50	2,63	3,77	9,40 (4,20 - 10,60)	4,77	**4,70 A++**	1,97 (0,81 - 2,87)	985	9,30
20+20+35+60	1,19	1,19	2,07	3,55	8,00 (3,00 - 9,20)	4,28	**7,90 A++**	1,87 (0,63 - 2,66)	935	9,00	1,39	1,39	2,44	4,18	9,40 (4,20 - 10,60)	4,77	**4,70 A++**	1,97 (0,81 - 2,87)	985	9,30
20+20+35+71	1,10	1,10	1,92	3,88	8,00 (3,00 - 9,20)	4,28	**7,90 A++**	1,87 (0,63 - 2,66)	935	9,00	1,29	1,29	2,25	4,57	9,40 (4,20 - 10,60)	4,70	**4,70 A++**	2,00 (0,83 - 2,86)	1000	9,40
20+20+42+42	1,29	1,29	2,71	2,71	8,00 (3,00 - 9,20)	4,17	**7,90 A++**	1,92 (0,57 - 2,80)	960	9,20	1,52	1,52	3,18	3,18	9,40 (4,20 - 10,60)	4,75	**4,70 A++**	1,98 (0,72 - 2,91)	990	9,30
20+20+42+50	1,21	1,21	2,55	3,03	8,00 (3,00 - 9,20)	4,28	**7,90 A++**	1,87 (0,63 - 2,66)	935	9,00	1,42	1,42	2,99	3,57	9,40 (4,20 - 10,60)	4,70	**4,70 A++**	2,00 (0,81 - 2,86)	1000	9,40
20+20+42+60	1,13	1,13	2,37	3,37	8,00 (3,00 - 9,20)	4,28	**7,90 A++**	1,87 (0,63 - 2,66)	935	9,00	1,32	1,32	2,78	3,98	9,40 (4,20 - 10,60)	4,70	**4,70 A++**	2,00 (0,81 - 2,86)	1000	9,40
20+20+50+50	1,14	1,14	2,86	2,86	8,00 (3,00 - 9,20)	4,23	**7,90 A++**	1,89 (0,70 - 2,60)	945	9,00	1,34	1,34	3,36	3,36	9,40 (4,20 - 10,60)	4,68	**4,70 A++**	2,01 (0,94 - 2,89)	1005	9,40
20+25+25+25	1,67	2,11	2,11	2,11	8,00 (3,00 - 9,20)	4,04	**7,90 A++**	1,98 (0,53 - 2,87)	990	9,50	1,99	2,47	2,47	2,47	9,40 (4,20 - 10,60)	4,63	**4,70 A++**	2,03 (0,69 - 2,99)	1015	9,50
20+25+25+35	1,52	1,90	1,90	2,68	8,00 (3,00 - 9,20)	4,17	**7,90 A++**	1,92 (0,57 - 2,80)	960	9,20	1,79	2,24	2,24	3,13	9,40 (4,20 - 10,60)	4,68	**4,70 A++**	2,01 (0,71 - 2,96)	1005	9,40
20+25+25+42	1,43	1,79	1,79	2,99	8,00 (3,00 - 9,20)	4,17	**7,90 A++**	1,92 (0,57 - 2,80)	960	9,20	1,68	2,10	2,10	3,52	9,40 (4,20 - 10,60)	4,68	**4,70 A++**	2,01 (0,72 - 2,95)	1005	9,40
20+25+25+50	1,33	1,67	1,67	3,33	8,00 (3,00 - 9,20)	4,28	**7,90 A++**	1,87 (0,62 - 2,65)	935	9,00	1,57	1,96	1,96	3,91	9,40 (4,20 - 10,60)	4,75	**4,70 A++**	1,98 (0,80 - 2,89)	990	9,30
20+25+25+60	1,23	1,54	1,54	3,69	8,00 (3,00 - 9,20)	4,28	**7,90 A++**	1,87 (0,62 - 2,65)	935	9,00	1,45	1,81	1,81	4,33	9,40 (4,20 - 10,60)	4,75	**4,70 A++**	1,98 (0,80 - 2,89)	990	9,30
20+25+25+71	1,13	1,42	1,42	4,03	8,00 (3,00 - 9,20)	4,28	**7,90 A++**	1,87 (0,63 - 2,66)	935	9,00	1,33	1,67	1,67	4,73	9,40 (4,20 - 10,60)	4,77	**4,70 A++**	1,97 (0,80 - 2,88)	985	9,30
20+25+35+35	1,39	1,75	2,43	2,43	8,00 (3,00 - 9,20)	4,17	**7,90 A++**	1,92 (0,57 - 2,80)	960	9,20	1,63	2,05	2,86	2,86	9,40 (4,20 - 10,60)	4,70	**4,70 A++**	2,00 (0,72 - 2,93)	1000	9,40
20+25+35+42	1,31	1,64	2,30	2,75	8,00 (3,00 - 9,20)	4,17	**7,90 A++**	1,92 (0,57 - 2,80)	960	9,20	1,54	1,93	2,70	3,23	9,40 (4,20 - 10,60)	4,72	**4,70 A++**	1,99 (0,72 - 2,92)	995	9,40
20+25+35+50	1,23	1,54	2,15	3,08	8,00 (3,00 - 9,20)	4,28	**7,90 A++**	1,87 (0,63 - 2,66)	935	9,00	1,45	1,81	2,53	3,61	9,40 (4,20 - 10,60)	4,77	**4,70 A++**	1,97 (0,81 - 2,87)	985	9,30
20+25+35+60	1,14	1,43	2,00	3,43	8,00 (3,00 - 9,20)	4,28	**7,90 A++**	1,87 (0,63 - 2,66)	935	9,00	1,34	1,68	2,35	4,03	9,40 (4,20 - 10,60)	4,77	**4,70 A++**	1,97 (0,81 - 2,87)	985	9,30
20+25+42+42	1,24	1,56	2,60	2,60	8,00 (3,00 - 9,20)	4,17	**7,90 A++**	1,92 (0,57 - 2,80)	960	9,20	1,46	1,82	3,06	3,06	9,40 (4,20 - 10,60)	4,75	**4,70 A++**	1,98 (0,72 - 2,91)	990	9,30
20+25+42+50	1,17	1,46	2,45	2,92	8,00 (3,00 - 9,20)	4,28	**7,90 A++**	1,87 (0,63 - 2,66)	935	9,00	1,37	1,72	2,88	3,43	9,40 (4,20 - 10,60)	4,70	**4,70 A++**	2,00 (0,81 - 2,86)	1000	9,40
20+25+42+60	1,09	1,36	2,29	3,26	8,00 (3,00 - 9,20)	4,28	**7,90 A++**	1,87 (0,63 - 2,66)	935	9,00	1,28	1,60	2,69	3,83	9,40 (4,20 - 10,60)	4,70	**4,70 A++**	2,00 (0,81 - 2,86)	1000	9,40
20+25+50+50	1,10	1,38	2,76	2,76	8,00 (3,00 - 9,20)	4,23	**7,90 A++**	1,89 (0,70 - 2,60)	945	9,00	1,30	1,62	3,24	3,24	9,40 (4,20 - 10,60)	4,68	**4,70 A++**	2,01 (0,94 - 2,89)	1005	9,40
20+35+35+35	1,28	2,24	2,24	2,24	8,00 (3,00 - 9,20)	4,17	**7,90 A++**	1,92 (0,57 - 2,72)	960	9,20	1,51	2,63	2,63	2,63	9,40 (4,20 - 10,60)	4,75	**4,70 A++**	1,98 (0,75 - 2,90)	990	9,30
20+35+35+42	1,21	2,12	2,12	2,55	8,00 (3,00 - 9,20)	4,17	**7,90 A++**	1,92 (0,57 - 2,72)	960	9,20	1,42	2,49	2,49	3,00	9,40 (4,20 - 10,60)	4,77	**4,70 A++**	1,97 (0,75 - 2,89)	985	9,30
20+35+35+50	1,14	2,00	2,00	2,86	8,00 (3,00 - 9,20)	4,28	**7,90 A++**	1,87 (0,63 - 2,66)	935	9,00	1,34	2,35	2,35	3,36	9,40 (4,20 - 10,60)	4,70	**4,70 A++**	2,00 (0,84 - 2,85)	1000	9,40
20+35+42+42	1,15	2,01	2,42	2,42	8,00 (3,00 - 9,20)	4,17	**7,90 A++**	1,92 (0,57 - 2,72)	960	9,20	1,35	2,37	2,84	2,84	9,40 (4,20 - 10,60)	4,77	**4,70 A++**	1,97 (0,76 - 2,88)	985	9,30
20+35+42+50	1,09	1,90	2,29	2,72	8,00 (3,00 - 9,20)	4,28	**7,90 A++**	1,87 (0,63 - 2,66)	935	9,00	1,28	2,24	2,69	3,19	9,40 (4,20 - 10,60)	4,72	**4,70 A++**	1,99 (0,85 - 2,84)	995	9,40
20+42+42+42	1,10	2,30	2,30	2,30	8,00 (3,00 - 9,20)	4,28	**7,90 A++**	1,87 (0,58 - 2,72)	935	9,00	1,30	2,70	2,70	2,70	9,40 (4,20 - 10,60)	4,70	**4,70 A++**	2,00 (0,76 - 2,87)	1000	9,40
25+25+25+25	2,00	2,00	2,00	2,00	8,00 (3,00 - 9,20)	4,04	**7,90 A++**	1,98 (0,53 - 2,87)	990	9,50	2,35	2,35	2,35	2,35	9,40 (4,20 - 10,60)	4,63	**4,70 A++**	2,03 (0,69 - 2,99)	1015	9,50
25+25+25+35	1,82	1,82	1,82	2,54	8,00 (3,00 - 9,20)	4,17	**7,90 A++**	1,92 (0,57 - 2,80)	960	9,20	2,14	2,14	2,14	2,98	9,40 (4,20 - 10,60)	4,68	**4,70 A++**	2,01 (0,71 - 2,96)	1005	9,40
25+25+25+42	1,71	1,71	1,71	2,87	8,00 (3,00 - 9,20)	4,17	**7,90 A++**	1,92 (0,57 - 2,80)	960	9,20	2,01	2,01	2,01	3,37	9,40 (4,20 - 10,60)	4,68	**4,70 A++**	2,01 (0,72 - 2,95)	1005	9,40
25+25+25+50	1,60	1,60	1,60	3,20	8,00 (3,00 - 9,20)	4,28	**7,90 A++**	1,87 (0,62 - 2,65)	935	9,00	1,88	1,88	1,88	3,76	9,40 (4,20 - 10,60)	4,75	**4,70 A++**	1,98 (0,80 - 2,89)	990	9,30
25+25+25+60	1,48	1,48	1,48	3,56	8,00 (3,00 - 9,20)	4,28	**7,90 A++**	1,87 (0,62 - 2,65)	935	9,00	1,74	1,74	1,74	4,18	9,40 (4,20 - 10,60)	4,75	**4,70 A++**	1,98 (0,80 - 2,89)	990	9,30
25+25+25+71	1,37	1,37	1,37	3,89	8,00 (3,00 - 9,20)	4,28	**7,90 A++**	1,87 (0,63 - 2,66)	935	9,00	1,61	1,61	1,61	4,57	9,40 (4,20 - 10,60)	4,77	**4,70 A++**	1,97 (0,80 - 2,88)	985	9,30
25+25+35+35	1,67	1,67	2,33	2,33	8,00 (3,00 - 9,20)	4,17	**7,90 A++**	1,92 (0,57 - 2,80)	960	9,20	1,96	1,96	2,74	2,74	9,40 (4,20 - 10,60)	4,70	**4,70 A++**	2,00 (0,72 - 2,93)	1000	9,40
25+25+35+42	1,57	1,57	2,20	2,66	8,00 (3,00 - 9,20)	4,17	**7,90 A++**	1,92 (0,57 - 2,80)	960	9,20	1,85	1,85	2,59	3,11	9,40 (4,20 - 10,60)	4,72	**4,70 A++**	1,99 (0,72 - 2,92)	995	9,40
25+25+35+50	1,48	1,48	2,07	2,97	8,00 (3,00 - 9,20)	4,28	**7,90 A++**	1,87 (0,63 - 2,66)	935	9,00	1,74	1,74	2,44	3,48	9,40 (4,20 - 10,60)	4,77	**4,70 A++**	1,97 (0,81 - 2,87)	985	9,30
25+25+35+60	1,38	1,38	1,93	3,31	8,00 (3,00 - 9,20)	4,28	**7,90 A++**	1,87 (0,63 - 2,66)	935	9,00	1,62	1,62	2,27	3,89	9,40 (4,20 - 10,60)	4,77	**4,70 A++**	1,97 (0,81 - 2,87)	985	9,30
25+25+42+42	1,49	1,49	2,51	2,51	8,00 (3,00 - 9,20)	4,17	**7,90 A++**	1,92 (0,57 - 2,80)	960	9,20	1,75	1,75	2,95	2,95	9,40 (4,20 - 10,60)	4,75	**4,70 A++**	1,98 (0,72 - 2,91)	990	9,30
25+25+42+50	1,41	1,41	2,37	2,81	8,00 (3,00 - 9,20)	4,28	**7,90 A++**	1,87 (0,63 - 2,66)	935	9,00	1,65	1,65	2,78	3,32	9,40 (4,20 - 10,60)	4,70	**4,70 A++**	2,00 (0,81 - 2,86)	1000	9,40
25+35+35+35	1,55	2,15	2,15	2,15	8,00 (3,00 - 9,20)	4,17	**7,90 A++**	1,92 (0,57 - 2,72)	960	9,20	1,81	2,53	2,53	2,53	9,40 (4,20 - 10,60)	4,75	**4,70 A++**	1,98 (0,75 - 2,90)	990	9,30
25+35+35+42	1,46	2,04	2,04	2,46	8,00 (3,00 - 9,20)	4,17	**7,90 A++**	1,92 (0,57 - 2,72)	960	9,20	1,72	2,40	2,40	2,88	9,40 (4,20 - 10,60)	4,77	**4,70 A++**	1,97 (0,75 - 2,89)	985	9,30
25+35+35+50	1,38	1,93	1,93	2,76	8,00 (3,00 - 9,20)	4,28	**7,90 A++**	1,87 (0,63 - 2,66)	935	9,00	1,62	2,27	2,27	3,24	9,40 (4,20 - 10,60)	4,70	**4,70 A++**	2,00 (0,84 - 2,85)	1000	9,40
25+35+42+42	1,39	1,95	2,33	2,33	8,00 (3,00 - 9,20)	4,17	**7,90 A++**	1,92 (0,57 - 2,72)	960	9,20	1,63	2,29	2,74	2,74	9,40 (4,20 - 10,60)	4,77	**4,70 A++**	1,97 (0,76 - 2,88)	985	9,30
35+35+35+35	2,00	2,00	2,00	2,00	8,00 (3,00 - 9,20)	4,28	**7,90 A++**	1,87 (0,58 - 2,72)	935	9,00	2,35	2,35	2,35	2,35	9,40 (4,20 - 10,60)	4,70	**4,70 A++**	2,00 (0,76 - 2,87)	1000	9,40
35+35+35+42	1,90	1,90	1,90	2,30	8,00 (3,00 - 9,20)	4,28	**7,90 A++**	1,87 (0,58 - 2,72	935	9,00	2,24	2,24	2,24	2,68	9,40 (4,20 - 10,60	4,70	**4,70 A++**	2,00 (0,76 - 2,86)	1000	9,40

1) Energy Label Scale from A+++ to D.

Free Multi 5x1 CU-5Z90TBE. Minimum capacity connected: 4,5 kW. Maximum capacity connected: 18,3 kW • R32 refrigerant

Indoor unit capacity	Cooling capacity (kW). Rooms						EER	SEER [1]	Input power rating	A.E.C.	Current	Heating capacity (kW). Rooms						COP	SCOP [1]	Input power rating	A.E.C.	Current
	A	B	C	D	E	Total (Min - Max)	W/W		kW	kWh	230V	A	B	C	D	E	Total (Min - Max)	W/W		kW	kWh	230V
1 Room																						
16	1,60					1,60 (1,30 - 2,30)	4,00		0,40 (0,25 - 0,64)	200	2,00	2,60					2,60 (1,20 - 3,20)	4,33		0,60 (0,30 - 0,96)	300	3,00
20	2,00					2,00 (1,80 - 2,90)	4,00		0,50 (0,34 - 0,81)	250	2,50	3,20					3,20 (1,20 - 4,10)	4,32		0,74 (0,30 - 1,23)	370	3,70
25	2,50					2,50 (1,80 - 2,90)	3,97		0,63 (0,34 - 0,81)	315	3,20	3,60					3,60 (1,20 - 4,30)	3,83		0,94 (0,30 - 1,23)	470	4,70
35	3,50					3,50 (1,80 - 4,10)	3,72		0,94 (0,34 - 1,36)	470	4,50	4,50					4,50 (1,20 - 5,80)	3,66		1,23 (0,30 - 2,10)	615	6,00
42	4,20					4,20 (1,80 - 4,50)	3,07		1,37 (0,34 - 1,99)	685	6,40	5,60					5,60 (1,20 - 6,80)	3,26		1,72 (0,30 - 2,93)	860	8,00
50	5,00					5,00 (1,90 - 5,70)	3,23		1,55 (0,34 - 2,13)	775	7,20	6,80					6,80 (1,20 - 6,90)	3,24		2,10 (0,30 - 2,52)	1050	9,70
60	6,00					6,00 (1,90 - 6,20)	2,96		2,03 (0,34 - 2,33)	1015	9,20	8,50					8,50 (1,30 - 9,00)	3,54		2,40 (0,62 - 2,55)	1200	11,10
71	7,10					7,10 (2,00 - 7,20)	2,81		2,53 (0,37 - 2,77)	1265	11,40	8,70					8,70 (1,40 - 9,20)	3,41		2,55 (0,68 - 2,72)	1275	11,80
2 Rooms																						
16 + 16	1,60	1,60				3,20 (2,40 - 5,80)	4,85	**5,60 A+**	0,66 (0,27 - 1,74)	330	3,40	2,35	2,35				4,70 (2,00 - 8,20)	3,88	**3,80 A**	1,21 (0,22 - 2,41)	605	5,80
16 + 20	1,60	2,00				3,60 (2,40 - 5,80)	4,56	**5,60 A+**	0,79 (0,27 - 1,74)	395	4,00	2,31	2,89				5,20 (2,00 - 8,20)	3,80	**3,80 A**	1,37 (0,22 - 2,40)	685	6,50
16 + 25	1,60	2,50				4,10 (2,40 - 5,80)	4,27	**5,60 A+**	0,96 (0,27 - 1,74)	480	4,70	2,19	3,41				5,60 (2,00 - 8,20)	3,73	**3,80 A**	1,50 (0,22 - 2,40)	750	7,10
16 + 35	1,60	3,50				5,10 (2,40 - 5,80)	3,86	**5,60 A+**	1,32 (0,26 - 1,68)	660	6,40	2,01	4,39				6,40 (2,00 - 8,60)	3,79	**3,80 A**	1,69 (0,21 - 2,48)	845	8,00
16 + 42	1,60	4,20				5,80 (2,40 - 6,70)	3,56	**5,60 A+**	1,63 (0,26 - 2,13)	815	7,90	2,04	5,36				7,40 (2,00 - 10,10)	3,72	**3,80 A**	1,99 (0,21 - 3,03)	995	9,40
16 + 50	1,60	5,00				6,60 (2,40 - 7,20)	3,59	**6,10 A++**	1,84 (0,25 - 2,13)	920	8,80	2,06	6,44				8,50 (2,00 - 11,00)	3,86	**4,00 A+**	2,20 (0,16 - 3,04)	1100	10,30
16 + 60	1,60	6,00				7,60 (2,40 - 8,60)	3,21	**6,10 A++**	2,37 (0,25 - 3,08)	1185	11,30	2,11	7,89				10,00 (2,00 - 11,00)	3,75	**4,00 A+**	2,67 (0,16 - 3,04)	1335	12,50
16 + 71	1,60	7,10				8,70 (2,50 - 9,10)	2,98	**6,10 A++**	2,92 (0,27 - 3,16)	1460	14,00	1,88	8,32				10,20 (2,00 - 13,00)	3,82	**4,00 A+**	2,67 (0,16 - 3,83)	1335	12,50
20 + 20	2,00	2,00				4,00 (2,40 - 5,80)	4,35	**5,60 A+**	0,92 (0,26 - 1,68)	460	4,50	2,90	2,90				5,80 (2,00 - 8,20)	3,79	**3,80 A**	1,53 (0,22 - 2,39)	765	7,30
20 + 25	2,00	2,50				4,50 (2,40 - 5,80)	4,02	**5,60 A+**	1,12 (0,26 - 1,68)	560	5,50	2,71	3,39				6,10 (2,00 - 8,20)	3,77	**3,80 A**	1,62 (0,22 - 2,39)	810	7,70
20 + 35	2,00	3,50				5,50 (2,40 - 5,80)	3,74	**5,60 A+**	1,47 (0,26 - 1,63)	735	7,10	2,51	4,39				6,90 (2,00 - 8,60)	3,81	**3,80 A**	1,81 (0,21 - 2,42)	905	8,50
20 + 42	2,00	4,20				6,20 (2,40 - 7,20)	3,37	**5,60 A+**	1,84 (0,26 - 2,49)	920	8,80	2,55	5,35				7,90 (2,00 - 11,00)	3,66	**3,80 A**	2,16 (0,20 - 3,23)	1080	10,20
20 + 50	2,00	5,00				7,00 (2,40 - 8,10)	3,59	**6,10 A++**	1,95 (0,25 - 2,61)	975	9,30	2,57	6,43				9,00 (2,00 - 11,00)	3,98	**4,00 A+**	2,26 (0,16 - 2,98)	1130	10,60
20 + 60	2,00	6,00				8,00 (2,40 - 8,60)	3,14	**6,10 A++**	2,55 (0,25 - 3,01)	1275	12,20	2,60	7,80				10,40 (2,00 - 11,90)	3,88	**4,00 A+**	2,68 (0,16 - 3,33)	1340	12,60
20 + 71	1,98	7,02				9,00 (2,50 - 10,00)	2,88	**6,10 A++**	3,12 (0,27 - 4,03)	1560	14,90	2,29	8,11				10,40 (2,00 - 13,00)	3,97	**4,00 A+**	2,62 (0,16 - 3,82)	1310	12,30
25 + 25	2,50	2,50				5,00 (2,40 - 5,80)	3,94	**5,60 A+**	1,27 (0,26 - 1,68)	635	6,10	3,25	3,25				6,50 (2,00 - 8,60)	3,82	**3,80 A**	1,70 (0,22 - 2,50)	850	8,10
25 + 35	2,50	3,50				6,00 (2,40 - 6,70)	3,47	**5,60 A+**	1,73 (0,26 - 2,13)	865	8,40	3,04	4,26				7,30 (2,00 - 10,10)	3,76	**3,80 A**	1,94 (0,21 - 3,03)	970	9,10
25 + 42	2,50	4,20				6,70 (2,40 - 7,20)	3,15	**5,60 A+**	2,13 (0,26 - 2,49)	1065	10,20	3,10	5,20				8,30 (2,00 - 11,00)	3,61	**3,80 A**	2,30 (0,20 - 3,23)	1150	10,80
25 + 50	2,50	5,00				7,50 (2,40 - 8,60)	3,33	**6,10 A++**	2,25 (0,25 - 3,01)	1125	10,80	3,13	6,27				9,40 (2,00 - 11,00)	3,84	**4,00 A+**	2,45 (0,16 - 2,98)	1225	11,50
25 + 60	2,50	6,00				8,50 (2,50 - 9,10)	2,89	**6,10 A++**	2,94 (0,27 - 3,29)	1470	14,10	3,06	7,34				10,40 (2,00 - 13,00)	3,88	**4,00 A+**	2,68 (0,16 - 3,83)	1340	12,60
25 + 71	2,34	6,66				9,00 (2,50 - 10,10)	2,88	**6,10 A++**	3,12 (0,27 - 4,18)	1560	14,90	2,71	7,69				10,40 (2,00 - 13,00)	3,97	**4,00 A+**	2,62 (0,16 - 3,82)	1310	12,30
35 + 35	3,50	3,50				7,00 (2,40 - 8,10)	3,11	**5,60 A+**	2,25 (0,26 - 3,06)	1125	10,80	4,05	4,05				8,10 (2,00 - 11,00)	3,70	**3,80 A**	2,19 (0,20 - 3,22)	1095	10,30
35 + 42	3,50	4,20				7,70 (2,40 - 8,60)	2,88	**5,60 A+**	2,67 (0,26 - 3,55)	1335	12,80	4,14	4,96				9,10 (2,00 - 11,00)	3,65	**3,80 A**	2,49 (0,20 - 3,16)	1245	11,70
35 + 50	3,50	5,00				8,50 (2,50 - 9,10)	3,02	**6,10 A++**	2,81 (0,27 - 3,16)	1405	13,50	4,20	6,00				10,20 (2,00 - 13,00)	3,94	**4,00 A+**	2,59 (0,16 - 3,81)	1295	12,20
35 + 60	3,32	5,68				9,00 (2,50 - 10,10)	2,82	**6,10 A++**	3,19 (0,27 - 4,18)	1595	15,30	3,83	6,57				10,40 (2,00 - 13,00)	3,98	**4,00 A+**	2,61 (0,16 - 3,81)	1305	12,30
35 + 71	2,97	6,03				9,00 (2,50 - 10,40)	3,01	**6,10 A++**	2,99 (0,27 - 4,34)	1495	14,30	3,43	6,97				10,40 (2,00 - 13,80)	4,02	**4,00 A+**	2,59 (0,16 - 4,14)	1295	12,20
42 + 42	4,20	4,20				8,40 (2,50 - 9,10)	2,51	**5,60 A+**	3,34 (0,28 - 3,96)	1670	16,00	5,05	5,05				10,10 (2,00 - 13,00)	3,62	**3,80 A**	2,79 (0,19 - 3,99)	1395	13,10
42 + 50	4,11	4,89				9,00 (2,50 - 10,00)	2,88	**6,10 A++**	3,12 (0,27 - 4,03)	1560	14,90	4,75	5,65				10,40 (2,00 - 13,00)	4,00	**4,00 A+**	2,60 (0,16 - 3,74)	1300	12,20
42 + 60	3,71	5,29				9,00 (2,50 - 10,40)	2,88	**6,10 A++**	3,12 (0,27 - 4,33)	1560	14,90	4,28	6,12				10,40 (2,00 - 13,80)	4,00	**4,00 A+**	2,60 (0,16 - 4,15)	1300	12,20
42 + 71	3,35	5,65				9,00 (2,50 - 10,40)	3,01	**6,10 A++**	2,99 (0,27 - 4,34)	1495	14,30	3,87	6,53				10,40 (2,00 - 13,80)	4,03	**4,00 A+**	2,58 (0,16 - 4,13)	1290	12,10
50 + 50	4,50	4,50				9,00 (2,50 - 10,40)	3,38	**6,10 A++**	2,66 (0,26 - 3,61)	1330	12,70	5,20	5,20				10,40 (2,00 - 13,80)	4,28	**4,00 A+**	2,43 (0,17 - 3,90)	1215	11,40
50 + 60	4,09	4,91				9,00 (2,50 - 10,40)	3,38	**6,10 A++**	2,66 (0,26 - 3,61)	1330	12,70	4,73	5,67				10,40 (2,00 - 13,80)	4,28	**4,00 A+**	2,43 (0,17 - 3,90)	1215	11,40
50 + 71	3,72	5,28				9,00 (2,50 - 10,40)	3,46	**6,10 A++**	2,60 (0,26 - 3,48)	1300	12,40	4,30	6,10				10,40 (2,00 - 13,80)	4,32	**4,00 A+**	2,41 (0,17 - 3,89)	1205	11,30
60 + 60	4,50	4,50				9,00 (2,50 - 10,40)	3,38	**6,10 A++**	2,66 (0,26 - 3,61)	1330	12,70	5,20	5,20				10,40 (2,00 - 13,80)	4,28	**4,00 A+**	2,43 (0,17 - 3,90)	1215	11,40
60 + 71	4,12	4,88				9,00 (2,50 - 10,40)	3,46	**6,10 A++**	2,60 (0,26 - 3,48)	1300	12,40	4,76	5,64				10,40 (2,00 - 13,80)	4,32	**4,00 A+**	2,41 (0,17 - 3,89)	1205	11,30
71 + 71	4,50	4,50				9,00 (2,50 - 10,40)	3,64	**6,10 A++**	2,47 (0,29 - 3,34)	1235	11,80	5,20	5,20				10,40 (2,00 - 13,80)	4,43	**4,00 A+**	2,35 (0,18 - 3,87)	1175	11,00
3 Rooms																						
16 + 16 + 16	1,60	1,60	1,60			4,80 (2,90 - 8,50)	4,85	**7,20 A++**	0,99 (0,32 - 2,62)	495	4,90	2,33	2,33	2,33			6,99 (2,70 - 12,30)	4,54	**4,00 A+**	1,54 (0,23 - 3,38)	770	7,30
16 + 16 + 20	1,60	1,60	2,00			5,20 (2,90 - 8,50)	4,73	**7,20 A++**	1,10 (0,32 - 2,62)	550	5,40	2,34	2,34	2,92			7,60 (2,70 - 12,30)	4,37	**4,00 A+**	1,74 (0,23 - 3,37)	870	8,30
16 + 16 + 25	1,60	1,60	2,50			5,70 (2,90 - 8,50)	4,42	**7,20 A++**	1,29 (0,32 - 2,62)	645	6,20	2,22	2,22	3,46			7,90 (2,70 - 12,30)	4,32	**4,00 A+**	1,83 (0,23 - 3,37)	915	8,60
16 + 16 + 35	1,60	1,60	3,50			6,70 (2,90 - 8,50)	4,16	**7,20 A++**	1,61 (0,31 - 2,55)	805	7,80	2,08	2,08	4,54			8,70 (2,70 - 12,30)	4,31	**4,10 A+**	2,02 (0,23 - 3,28)	1010	9,50
16 + 16 + 42	1,60	1,60	4,20			7,40 (2,90 - 8,50)	3,79	**7,20 A++**	1,95 (0,34 - 2,49)	975	9,30	2,10	2,10	5,50			9,70 (2,70 - 12,30)	4,06	**4,10 A+**	2,39 (0,23 - 3,27)	1195	11,20
16 + 16 + 50	1,60	1,60	5,00			8,20 (2,90 - 8,70)	3,89	**7,20 A++**	2,11 (0,34 - 2,29)	1055	10,10	2,03	2,03	6,34			10,40 (2,70 - 12,90)	4,50	**4,10 A+**	2,31 (0,25 - 3,36)	1155	10,90
16 + 16 + 60	1,57	1,57	5,86			9,00 (2,90 - 10,10)	3,64	**7,20 A++**	2,47 (0,34 - 3,00)	1235	11,80	1,81	1,81	6,78			10,40 (2,70 - 13,60)	4,50	**4,20 A+**	2,31 (0,25 - 3,70)	1155	10,90
16 + 16 + 71	1,40	1,40	6,20			9,00 (2,90 - 10,70)	3,73	**7,20 A++**	2,41 (0,34 - 3,34)	1205	11,50	1,62	1,62	7,16			10,40 (2,70 - 13,60)	4,52	**4,20 A+**	2,30 (0,25 - 3,62)	1150	10,80
16 + 20 + 20	1,60	2,00	2,00			5,60 (2,90 - 8,50)	4,52	**7,20 A++**	1,24 (0,31 - 2,55)	620	6,00	2,32	2,89	2,89			8,10 (2,70 - 12,30)	4,33	**4,00 A+**	1,87 (0,23 - 3,36)	935	8,80
16 + 20 + 25	1,60	2,00	2,50			6,10 (2,90 - 8,50)	4,21	**7,20 A++**	1,45 (0,31 - 2,55)	725	7,00	2,23	2,79	3,48			8,50 (2,70 - 12,30)	4,15	**4,10 A+**	2,05 (0,23 - 3,36)	1025	9,60
16 + 20 + 35	1,60	2,00	3,50			7,10 (2,90 - 8,50)	3,99	**7,20 A++**	1,78 (0,34 - 2,49)	890	8,50	2,10	2,62	4,58			9,30 (2,70 - 12,30)	4,23	**4,10 A+**	2,20 (0,23 - 3,27)	1100	10,30
16 + 20 + 42	1,60	2,00	4,20			7,80 (2,90 - 8,50)	3,79	**7,20 A++**	2,06 (0,34 - 2,49)	1030	9,90	2,11	2,64	5,55			10,30 (2,70 - 12,90)	4,26	**4,10 A+**	2,42 (0,23 - 3,54)	1210	11,40
16 + 20 + 50	1,60	2,00	5,00			8,60 (2,90 - 9,60)	3,74	**7,20 A++**	2,30 (0,34 - 2,62)	1150	11,00	1,93	2,42	6,05			10,40 (2,70 - 13,60)	4,52	**4,20 A+**	2,30 (0,25 - 3,63)	1150	10,80
16 + 20 + 60	1,49	1,88	5,63			9,00 (2,90 - 10,10)	3,73	**7,20 A++**	2,41 (0,34 - 2,94)	1205	11,50	1,73	2,17	6,50			10,40 (2,70 - 13,60)	4,52	**4,20 A+**	2,30 (0,25 - 3,63)	1150	10,80
16 + 20 + 71	1,35	1,68	5,97			9,00 (2,90 - 10,70)	3,83	**7,20 A++**	2,35 (0,34 - 3,34)	1175	11,20	1,56	1,94	6,90			10,40 (2,70 - 13,80)	4,54	**4,20 A+**	2,29 (0,25 - 3,73)	1145	10,80
16 + 25 + 25	1,60	2,50	2,50			6,60 (2,90 - 8,50)	3,98	**7,20 A++**	1,66 (0,31 - 2,55)	830	8,00	2,14	3,33	3,33			8,80 (2,70 - 12,30)	4,23	**4,10 A+**	2,08 (0,23 - 3,36)	1040	9,80
16 + 25 + 35	1,60	2,50	3,50			7,60 (2,90 - 8,50)	3,69	**7,20 A++**	2,06 (0,34 - 2,49)	1030	9,90	2,02	3,16	4,42			9,60 (2,70 - 12,30)	4,10	**4,10 A+**	2,34 (0,23 - 3,27)	1170	11,00
16 + 25 + 42	1,60	2,50	4,20			8,30 (2,90 - 8,70)	3,52	**7,20 A++**	2,36 (0,34 - 2,54)	1180	11,30	2,00	3,13	5,27			10,40 (2,70 - 12,90)	4,23	**4,10 A+**	2,46 (0,23 - 3,54)	1230	11,60
16 + 25 + 50	1,58	2,47	4,95			9,00 (2,90 - 10,10)	3,73	**7,20 A++**	2,41 (0,34 - 2,94)	1205	11,50	1,83	2,86	5,71			10,40 (2,70 - 13,60)	4,52	**4,20 A+**	2,30 (0,25 - 3,63)	1150	10,80
16 + 25 + 60	1,42	2,23	5,35			9,00 (2,90 - 10,70)	3,73	**7,20 A++**	2,41 (0,34 - 3,48)	1205	11,50	1,65	2,57	6,18			10,40 (2,70 - 13,60)	4,52	**4,20 A+**	2,30 (0,25 - 3,63)	1150	10,80
16 + 25 + 71	1,28	2,01	5,71			9,00 (2,90 - 10,70)	3,83	**7,20 A++**	2,35 (0,34 - 3,34)	1175	11,20	1,49	2,32	6,59			10,40 (2,70 - 13,80)	4,54	**4,20 A+**	2,29 (0,25 - 3,73)	1145	10,80
16 + 35 + 35	1,60	3,50	3,50			8,60 (2,90 - 9,60)	3,45	**7,20 A++**	2,49 (0,34 - 2,93)	1245	11,90	1,94	4,23	4,23			10,40 (2,70 - 13,60)	4,24	**4,20 A+**	2,45 (0,23 - 3,86)	1225	11,50
16 + 35 + 42	1,55	3,39	4,06			9,00 (2,90 - 10,10)	3,38	**7,20 A++**	2,66 (0,34 - 3,33)	1330	12,70	1,79	3,91	4,70			10,40 (2,70 - 13,60)	4,28	**4,20 A+**	2,43 (0,24 - 3,85)	1215	11,40
16 + 35 + 50	1,42	3,12	4,46			9,00 (2,90 - 10,70)	3,73	**7,20 A++**	2,41 (0,34 - 3,34)	1205	11,50	1,65	3,60	5,15			10,40 (2,70 - 13,60)	4,58	**4,20 A+**	2,27 (0,25 - 3,59)	1135	10,70
16 + 35 + 60	1,30	2,84	4,86			9,00 (2,90 - 10,70)	3,73	**7,20 A++**	2,41 (0,34 - 3,34)	1205	11,50	1,50	3,28	5,62			10,40 (2,70 - 13,80)	4,58	**4,20 A+**	2,27 (0,25 - 3,71)	1135	10,70
16 + 35 + 71	1,18	2,58	5,24			9,00 (2,90 - 10,70)	3,83	**7,20 A++**	2,35 (0,34 - 3,20)	1175	11,20	1,36	2,98	6,06			10,40 (2,70 - 13,80)	4,60	**4,20 A+**	2,26 (0,27 - 3,69)	1130	10,60
16 + 42 + 42	1,44	3,78	3,78			9,00 (2,90 - 10,70)	3,38	**7,20 A++**	2,66 (0,34 - 3,91)	1330	12,70	1,66	4,37	4,37			10,40 (2,70 - 13,60)	4,30	**4,20 A+**	2,42 (0,24 - 3,78)	1210	11,40
16 + 42 + 50	1,33	3,50	4,17			9,00 (2,90 - 10,70)	3,83	**7,20 A++**	2,35 (0,34 - 3,34)	1175	11,20	1,54	4,04	4,82			10,40 (2,70 - 13,80)	4,60	**4,20 A+**	2,26 (0,27 - 3,70)	1130	10,60
16 + 42 + 60	1,22	3,20	4,58			9,00 (2,90 - 10,70)	3,83	**7,20 A++**	2,35 (0,34 - 3,34)	1175	11,20	1,41	3,70	5,29			10,40 (2,70 - 13,80)	4,60	**4,20 A+**	2,26 (0,27 - 3,70)	1130	10,60
16 + 42 + 71	1,12	2,93	4,95			9,00 (2,90 - 10,70)	3,95	**7,20 A++**	2,28 (0,37 - 3,20)	1140	10,90	1,29	3,39	5,72			10,40 (2,70 - 14,10)	4,62	**4,20 A+**	2,25 (0,27 - 3,80)	1125	10,60
16 + 50 + 50	1,24	3,88	3,88			9,00 (2,90 - 10,70)	4,17	**7,20 A++**	2,16 (0,37 - 2,94)	1080	10,30	1,44	4,48	4,48			10,40 (2,70 - 13,80)	4,79	**4,20 A+**	2,17 (0,30 - 3,50)	1085	10,20
16 + 50 + 60	1,14	3,57	4,29			9,00 (2,90 - 10,70)	4,17	**7,20 A++**	2,16 (0,37 - 2,94)	1080	10,30	1,32	4,13	4,95			10,40 (2,70 - 13,80)	4,79	**4,20 A+**	2,17 (0,30 - 3,50)	1085	10,20
16 + 50 + 71	1,05	3,28	4,67			9,00 (3,00 - 10,70)	4,15	**7,20 A++**	2,17 (0,40 - 2,87)	1085	10,40	1,21	3,80	5,39			10,40 (2,70 - 14,10)	4,81	**4,20 A+**	2,16 (0,31 - 3,65)	1080	10,20
16 + 60 + 60	1,06	3,97	3,97			9,00 (3,00 - 10,70)	4,17	**7,20 A++**	2,16 (0,40 - 2,94)	1080	10,30	1,22	4,59	4,59			10,40 (2,70 - 14,10)	4,79	**4,20 A+**	2,17 (0,30 - 3,67)	1085	10,20

Rating Conditions: Cooling Indoor 27°C DB / 19°C WB. Cooling Outdoor 35°C DB / 24°C WB. Heating Indoor 20°C DB. Heating Outdoor 7°C DB / 6°C WB. (DB: Dry Bulb; WB: Wet Bulb).
Specifications subject to change without notice. For detailed information about ErP / Energy Labelling, please visit our websites www.aircon.panasonic.eu or www.ptc.panasonic.eu.

Free Multi R32 combinations table

Free Multi 5x1 CU-5Z90TBE. Minimum capacity connected: 4,5 kW. Maximum capacity connected: 18,3 kW • R32 refrigerant

Indoor unit capacity	Cooling capacity (kW). Rooms						EER	SEER [1]	Input power rating	A.E.C.	Current	Heating capacity (kW). Rooms						COP	SCOP [1]	Input power rating	A.E.C.	Current
	A	B	C	D	E	Total (Min - Max)	W/W		kW	kWh	230V	A	B	C	D	E	Total (Min - Max)	W/W		kW	kWh	230V
16+60+71	0,98	3,67	4,35			9,00 (3,00 - 10,70)	4,15	**7,20 A++**	2,17 (0,40 - 2,87)	1085	10,40	1,13	4,24	5,03			10,40 (2,70 - 14,10)	4,81	**4,20 A+**	2,16 (0,31 - 3,65)	1080	10,20
16+71+71	0,92	4,04	4,04			9,00 (3,00 - 10,70)	4,27	**7,20 A++**	2,11 (0,40 - 2,81)	1055	10,10	1,06	4,67	4,67			10,40 (2,70 - 14,40)	4,75	**4,20 A+**	2,19 (0,32 - 3,75)	1095	10,30
20+20+20	2,00	2,00	2,00			6,00 (2,90 - 8,50)	4,32	**7,20 A++**	1,39 (0,31 - 2,55)	695	6,70	2,86	2,86	2,86			8,58 (2,70 - 12,30)	4,33	**4,10 A+**	1,98 (0,23 - 3,35)	990	9,30
20+20+25	2,00	2,00	2,50			6,50 (2,90 - 8,50)	4,06	**7,20 A++**	1,60 (0,31 - 2,55)	800	7,70	2,77	2,77	3,46			9,00 (2,70 - 12,30)	4,25	**4,10 A+**	2,12 (0,23 - 3,35)	1060	10,00
20+20+35	2,00	2,00	3,50			7,50 (2,90 - 8,50)	3,85	**7,20 A++**	1,95 (0,34 - 2,49)	975	9,30	2,61	2,61	4,58			9,80 (2,70 - 12,30)	4,12	**4,10 A+**	2,38 (0,23 - 3,26)	1190	11,20
20+20+42	2,00	2,00	4,20			8,20 (2,90 - 8,70)	3,57	**7,20 A++**	2,30 (0,34 - 2,54)	1150	11,00	2,54	2,54	5,32			10,40 (2,70 - 12,90)	4,24	**4,10 A+**	2,45 (0,23 - 3,53)	1225	11,50
20+20+50	2,00	2,00	5,00			9,00 (2,90 - 9,60)	3,73	**7,20 A++**	2,41 (0,34 - 2,62)	1205	11,50	2,31	2,31	5,78			10,40 (2,70 - 13,60)	4,54	**4,20 A+**	2,29 (0,25 - 3,62)	1145	10,80
20+20+60	1,80	1,80	5,40			9,00 (2,90 - 10,70)	3,73	**7,20 A++**	2,41 (0,34 - 3,41)	1205	11,50	2,08	2,08	6,24			10,40 (2,70 - 13,60)	4,54	**4,20 A+**	2,29 (0,25 - 3,62)	1145	10,80
20+20+71	1,62	1,62	5,76			9,00 (2,90 - 10,70)	3,83	**7,20 A++**	2,35 (0,34 - 3,27)	1175	11,20	1,87	1,87	6,66			10,40 (2,70 - 13,80)	4,56	**4,20 A+**	2,28 (0,25 - 3,71)	1140	10,70
20+25+25	2,00	2,50	2,50			7,00 (2,90 - 8,50)	3,93	**7,20 A++**	1,78 (0,31 - 2,55)	890	8,50	2,68	3,36	3,36			9,40 (2,70 - 12,30)	4,16	**4,10 A+**	2,26 (0,23 - 3,35)	1130	10,60
20+25+35	2,00	2,50	3,50			8,00 (2,90 - 8,50)	3,67	**7,20 A++**	2,18 (0,34 - 2,49)	1090	10,40	2,55	3,19	4,46			10,20 (2,70 - 12,90)	4,16	**4,10 A+**	2,45 (0,23 - 3,54)	1225	11,50
20+25+42	2,00	2,50	4,20			8,70 (2,90 - 9,60)	3,43	**7,20 A++**	2,54 (0,34 - 3,00)	1270	12,20	2,39	2,99	5,02			10,40 (2,70 - 13,60)	4,24	**4,20 A+**	2,45 (0,23 - 3,87)	1225	11,50
20+25+50	1,89	2,37	4,74			9,00 (2,90 - 10,10)	3,73	**7,20 A++**	2,41 (0,34 - 2,94)	1205	11,50	2,19	2,74	5,47			10,40 (2,70 - 13,60)	4,54	**4,20 A+**	2,29 (0,25 - 3,62)	1145	10,80
20+25+60	1,71	2,14	5,15			9,00 (2,90 - 10,70)	3,73	**7,20 A++**	2,41 (0,34 - 3,41)	1205	11,50	1,98	2,48	5,94			10,40 (2,70 - 13,80)	4,54	**4,20 A+**	2,29 (0,25 - 3,73)	1145	10,80
20+25+71	1,55	1,94	5,51			9,00 (2,90 - 10,70)	3,83	**7,20 A++**	2,35 (0,34 - 3,27)	1175	11,20	1,79	2,24	6,37			10,40 (2,70 - 13,80)	4,56	**4,20 A+**	2,28 (0,25 - 3,71)	1140	10,70
20+35+35	2,00	3,50	3,50			9,00 (2,90 - 9,60)	3,38	**7,20 A++**	2,66 (0,34 - 2,93)	1330	12,70	2,32	4,04	4,04			10,40 (2,70 - 13,60)	4,28	**4,20 A+**	2,43 (0,24 - 3,85)	1215	11,40
20+35+42	1,85	3,25	3,90			9,00 (2,90 - 10,70)	3,38	**7,20 A++**	2,66 (0,34 - 3,91)	1330	12,70	2,14	3,75	4,51			10,40 (2,70 - 13,60)	4,30	**4,20 A+**	2,42 (0,24 - 3,78)	1210	11,40
20+35+50	1,71	3,00	4,29			9,00 (2,90 - 10,70)	3,83	**7,20 A++**	2,35 (0,34 - 3,34)	1175	11,20	1,98	3,47	4,95			10,40 (2,70 - 13,80)	4,60	**4,20 A+**	2,26 (0,27 - 3,70)	1130	10,60
20+35+60	1,56	2,74	4,70			9,00 (2,90 - 10,70)	3,83	**7,20 A++**	2,35 (0,34 - 3,34)	1175	11,20	1,81	3,17	5,42			10,40 (2,70 - 13,80)	4,60	**4,20 A+**	2,26 (0,27 - 3,70)	1130	10,60
20+35+71	1,43	2,50	5,07			9,00 (2,90 - 10,70)	3,95	**7,20 A++**	2,28 (0,37 - 3,20)	1140	10,90	1,65	2,89	5,86			10,40 (2,70 - 13,80)	4,62	**4,20 A+**	2,25 (0,27 - 3,68)	1125	10,60
20+42+42	1,74	3,63	3,63			9,00 (2,90 - 10,70)	3,46	**7,20 A++**	2,60 (0,34 - 3,91)	1300	12,40	2,00	4,20	4,20			10,40 (2,70 - 13,60)	4,32	**4,20 A+**	2,41 (0,24 - 3,77)	1205	11,30
20+42+50	1,60	3,38	4,02			9,00 (2,90 - 10,70)	3,83	**7,20 A++**	2,35 (0,34 - 3,27)	1175	11,20	1,86	3,90	4,64			10,40 (2,70 - 13,80)	4,60	**4,20 A+**	2,26 (0,27 - 3,68)	1130	10,60
20+42+60	1,47	3,10	4,43			9,00 (2,90 - 10,70)	3,83	**7,20 A++**	2,35 (0,34 - 3,27)	1175	11,20	1,70	3,58	5,12			10,40 (2,70 - 13,80)	4,60	**4,20 A+**	2,26 (0,27 - 3,68)	1130	10,60
20+42+71	1,35	2,84	4,81			9,00 (2,90 - 10,70)	3,95	**7,20 A++**	2,28 (0,37 - 3,20)	1140	10,90	1,56	3,28	5,56			10,40 (2,70 - 14,10)	4,64	**4,20 A+**	2,24 (0,27 - 3,78)	1120	10,50
20+50+50	1,50	3,75	3,75			9,00 (2,90 - 10,70)	4,17	**7,20 A++**	2,16 (0,37 - 2,94)	1080	10,30	1,74	4,33	4,33			10,40 (2,70 - 13,80)	4,81	**4,20 A+**	2,16 (0,31 - 3,48)	1080	10,20
20+50+60	1,38	3,46	4,16			9,00 (2,90 - 10,70)	4,17	**7,20 A++**	2,16 (0,37 - 2,94)	1080	10,30	1,60	4,00	4,80			10,40 (2,70 - 14,10)	4,81	**4,20 A+**	2,16 (0,31 - 3,65)	1080	10,20
20+50+71	1,28	3,19	4,53			9,00 (3,00 - 10,70)	4,15	**7,20 A++**	2,17 (0,40 - 2,87)	1085	10,40	1,48	3,69	5,23			10,40 (2,70 - 14,10)	4,75	**4,20 A+**	2,19 (0,32 - 3,64)	1095	10,30
20+60+60	1,28	3,86	3,86			9,00 (3,00 - 10,70)	4,17	**7,20 A++**	2,16 (0,40 - 2,94)	1080	10,30	1,48	4,46	4,46			10,40 (2,70 - 14,10)	4,81	**4,20 A+**	2,16 (0,31 - 3,65)	1080	10,20
20+60+71	1,19	3,58	4,23			9,00 (3,00 - 10,70)	4,15	**7,20 A++**	2,17 (0,40 - 2,87)	1085	10,40	1,38	4,13	4,89			10,40 (2,70 - 14,40)	4,75	**4,20 A+**	2,19 (0,32 - 3,75)	1095	10,30
20+71+71	1,12	3,94	3,94			9,00 (3,00 - 10,70)	4,27	**7,20 A++**	2,11 (0,41 - 2,81)	1055	10,10	1,28	4,56	4,56			10,40 (2,70 - 14,40)	4,77	**4,20 A+**	2,18 (0,33 - 3,74)	1090	10,20
25+25+25	2,50	2,50	2,50			7,50 (2,90 - 8,50)	3,73	**7,20 A++**	2,01 (0,31 - 2,55)	1005	9,60	3,23	3,23	3,23			9,69 (2,70 - 12,30)	4,02	**4,10 A+**	2,41 (0,23 - 3,35)	1205	11,30
25+25+35	2,50	2,50	3,50			8,50 (2,90 - 9,60)	3,41	**7,20 A++**	2,49 (0,34 - 3,00)	1245	11,90	3,06	3,06	4,28			10,40 (2,70 - 13,60)	4,23	**4,20 A+**	2,46 (0,23 - 3,89)	1230	11,60
25+25+42	2,45	2,45	4,10			9,00 (2,90 - 10,10)	3,30	**7,20 A++**	2,73 (0,34 - 3,40)	1365	13,10	2,83	2,83	4,74			10,40 (2,70 - 13,60)	4,24	**4,20 A+**	2,45 (0,23 - 3,87)	1225	11,50
25+25+50	2,25	2,25	4,50			9,00 (2,90 - 10,70)	3,73	**7,20 A++**	2,41 (0,34 - 3,41)	1205	11,50	2,60	2,60	5,20			10,40 (2,70 - 13,60)	4,54	**4,20 A+**	2,29 (0,25 - 3,62)	1145	10,80
25+25+60	2,05	2,05	4,90			9,00 (2,90 - 10,70)	3,73	**7,20 A++**	2,41 (0,34 - 3,41)	1205	11,50	2,36	2,36	5,68			10,40 (2,70 - 13,80)	4,54	**4,20 A+**	2,29 (0,25 - 3,73)	1145	10,80
25+25+71	1,86	1,86	5,28			9,00 (2,90 - 10,70)	3,83	**7,20 A++**	2,35 (0,34 - 3,27)	1175	11,20	2,15	2,15	6,10			10,40 (2,70 - 13,80)	4,56	**4,20 A+**	2,28 (0,25 - 3,71)	1140	10,70
25+35+35	2,36	3,32	3,32			9,00 (2,90 - 10,10)	3,38	**7,20 A++**	2,66 (0,34 - 3,33)	1330	12,70	2,74	3,83	3,83			10,40 (2,70 - 13,60)	4,28	**4,20 A+**	2,43 (0,24 - 3,85)	1215	11,40
25+35+42	2,20	3,09	3,71			9,00 (2,90 - 10,70)	3,38	**7,20 A++**	2,66 (0,34 - 3,91)	1330	12,70	2,55	3,57	4,28			10,40 (2,70 - 13,60)	4,30	**4,20 A+**	2,42 (0,24 - 3,78)	1210	11,40
25+35+50	2,05	2,86	4,09			9,00 (2,90 - 10,70)	3,83	**7,20 A++**	2,35 (0,34 - 3,34)	1175	11,20	2,36	3,31	4,73			10,40 (2,70 - 13,80)	4,60	**4,20 A+**	2,26 (0,27 - 3,70)	1130	10,60
25+35+60	1,87	2,63	4,50			9,00 (2,90 - 10,70)	3,83	**7,20 A++**	2,35 (0,34 - 3,34)	1175	11,20	2,17	3,03	5,20			10,40 (2,70 - 13,80)	4,60	**4,20 A+**	2,26 (0,27 - 3,70)	1130	10,60
25+35+71	1,72	2,40	4,88			9,00 (2,90 - 10,70)	3,95	**7,20 A++**	2,28 (0,37 - 3,20)	1140	10,90	1,98	2,78	5,64			10,40 (2,70 - 14,10)	4,62	**4,20 A+**	2,25 (0,27 - 3,80)	1125	10,60
25+42+42	2,06	3,47	3,47			9,00 (2,90 - 10,70)	3,46	**7,20 A++**	2,60 (0,34 - 3,91)	1300	12,40	2,38	4,01	4,01			10,40 (2,70 - 13,80)	4,32	**4,20 A+**	2,41 (0,24 - 3,89)	1205	11,30
25+42+50	1,92	3,23	3,85			9,00 (2,90 - 10,70)	3,83	**7,20 A++**	2,35 (0,34 - 3,27)	1175	11,20	2,22	3,73	4,45			10,40 (2,70 - 13,80)	4,60	**4,20 A+**	2,26 (0,27 - 3,68)	1130	10,60
25+42+60	1,77	2,98	4,25			9,00 (2,90 - 10,70)	3,83	**7,20 A++**	2,35 (0,34 - 3,27)	1175	11,20	2,05	3,44	4,91			10,40 (2,70 - 14,10)	4,60	**4,20 A+**	2,26 (0,27 - 3,80)	1130	10,60
25+42+71	1,63	2,74	4,63			9,00 (3,00 - 10,70)	3,95	**7,20 A++**	2,28 (0,37 - 3,20)	1140	10,90	1,88	3,17	5,35			10,40 (2,70 - 14,10)	4,64	**4,20 A+**	2,24 (0,27 - 3,78)	1120	10,50
25+50+50	1,80	3,60	3,60			9,00 (2,90 - 10,70)	4,17	**7,20 A++**	2,16 (0,37 - 2,94)	1080	10,30	2,08	4,16	4,16			10,40 (2,70 - 13,80)	4,81	**4,20 A+**	2,16 (0,31 - 3,48)	1080	10,20
25+50+60	1,67	3,33	4,00			9,00 (3,00 - 10,70)	4,17	**7,20 A++**	2,16 (0,40 - 2,94)	1080	10,30	1,93	3,85	4,62			10,40 (2,70 - 14,10)	4,81	**4,20 A+**	2,16 (0,31 - 3,65)	1080	10,20
25+50+71	1,54	3,08	4,38			9,00 (3,00 - 10,70)	4,15	**7,20 A++**	2,17 (0,40 - 2,87)	1085	10,40	1,78	3,56	5,06			10,40 (2,70 - 14,10)	4,75	**4,20 A+**	2,19 (0,32 - 3,64)	1095	10,30
25+60+60	1,56	3,72	3,72			9,00 (3,00 - 10,70)	4,17	**7,20 A++**	2,16 (0,40 - 2,94)	1080	10,30	1,80	4,30	4,30			10,40 (2,70 - 14,10)	4,81	**4,20 A+**	2,16 (0,31 - 3,65)	1080	10,20
25+60+71	1,44	3,46	4,10			9,00 (3,00 - 10,70)	4,15	**7,20 A++**	2,17 (0,40 - 2,87)	1085	10,40	1,67	4,00	4,73			10,40 (2,70 - 14,40)	4,75	**4,20 A+**	2,19 (0,32 - 3,75)	1095	10,30
25+71+71	1,34	3,83	3,83			9,00 (3,00 - 10,70)	4,27	**7,20 A++**	2,11 (0,41 - 2,81)	1055	10,10	1,56	4,42	4,42			10,40 (2,70 - 14,40)	4,77	**4,20 A+**	2,18 (0,33 - 3,74)	1090	10,20
35+35+35	3,00	3,00	3,00			9,00 (2,90 - 10,70)	3,46	**7,20 A++**	2,60 (0,34 - 3,83)	1300	12,40	3,46	3,46	3,46			10,38 (2,70 - 13,80)	4,40	**4,20 A+**	2,36 (0,24 - 3,88)	1180	11,10
35+35+42	2,81	2,81	3,38			9,00 (2,90 - 10,70)	3,46	**7,20 A++**	2,60 (0,34 - 3,76)	1300	12,40	3,25	3,25	3,90			10,40 (2,70 - 13,80)	4,43	**4,20 A+**	2,35 (0,24 - 3,87)	1175	11,00
35+35+50	2,63	2,63	3,74			9,00 (2,90 - 10,70)	3,83	**7,20 A++**	2,35 (0,34 - 3,20)	1175	11,20	3,03	3,03	4,34			10,40 (2,70 - 13,80)	4,64	**4,20 A+**	2,24 (0,27 - 3,66)	1120	10,50
35+35+60	2,42	2,42	4,16			9,00 (2,90 - 10,70)	3,83	**7,20 A++**	2,35 (0,34 - 3,20)	1175	11,20	2,80	2,80	4,80			10,40 (2,70 - 14,10)	4,64	**4,20 A+**	2,24 (0,27 - 3,78)	1120	10,50
35+35+71	2,23	2,23	4,54			9,00 (3,00 - 10,70)	3,95	**7,20 A++**	2,28 (0,37 - 3,14)	1140	10,90	2,58	2,58	5,24			10,40 (2,70 - 14,10)	4,66	**4,20 A+**	2,23 (0,27 - 3,76)	1115	10,50
35+42+42	2,64	3,18	3,18			9,00 (2,90 - 10,70)	3,56	**7,20 A++**	2,53 (0,34 - 3,76)	1265	12,10	3,06	3,67	3,67			10,40 (2,70 - 13,80)	4,44	**4,20 A+**	2,34 (0,25 - 3,85)	1170	11,00
35+42+50	2,48	2,98	3,54			9,00 (2,90 - 10,70)	3,95	**7,20 A++**	2,28 (0,37 - 3,20)	1140	10,90	2,87	3,44	4,09			10,40 (2,70 - 14,10)	4,66	**4,20 A+**	2,23 (0,27 - 3,77)	1115	10,50
35+42+60	2,30	2,76	3,94			9,00 (3,00 - 10,70)	3,95	**7,20 A++**	2,28 (0,37 - 3,20)	1140	10,90	2,66	3,19	4,55			10,40 (2,70 - 14,10)	4,66	**4,20 A+**	2,23 (0,27 - 3,77)	1115	10,50
35+42+71	2,13	2,55	4,32			9,00 (3,00 - 10,70)	3,95	**7,20 A++**	2,28 (0,37 - 3,14)	1140	10,90	2,46	2,95	4,99			10,40 (2,70 - 14,10)	4,68	**4,20 A+**	2,22 (0,28 - 3,75)	1110	10,40
35+50+50	2,34	3,33	3,33			9,00 (3,00 - 10,70)	4,15	**7,20 A++**	2,17 (0,40 - 2,87)	1085	10,40	2,70	3,85	3,85			10,40 (2,70 - 14,10)	4,77	**4,20 A+**	2,18 (0,33 - 3,62)	1090	10,20
35+50+60	2,17	3,10	3,73			9,00 (3,00 - 10,70)	4,15	**7,20 A++**	2,17 (0,40 - 2,87)	1085	10,40	2,51	3,59	4,30			10,40 (2,70 - 14,10)	4,77	**4,20 A+**	2,18 (0,33 - 3,62)	1090	10,20
35+50+71	2,02	2,88	4,10			9,00 (3,00 - 10,70)	4,27	**7,20 A++**	2,11 (0,40 - 2,81)	1055	10,10	2,33	3,33	4,74			10,40 (2,70 - 14,40)	4,79	**4,20 A+**	2,17 (0,33 - 3,72)	1085	10,20
35+60+60	2,04	3,48	3,48			9,00 (3,00 - 10,70)	4,15	**7,20 A++**	2,17 (0,40 - 2,87)	1085	10,40	2,34	4,03	4,03			10,40 (2,70 - 14,40)	4,77	**4,20 A+**	2,18 (0,33 - 3,74)	1090	10,20
35+60+71	1,90	3,25	3,85			9,00 (3,00 - 10,70)	4,27	**7,20 A++**	2,11 (0,40 - 2,81)	1055	10,10	2,19	3,76	4,45			10,40 (2,70 - 14,40)	4,79	**4,20 A+**	2,17 (0,33 - 3,72)	1085	10,20
35+71+71	1,78	3,61	3,61			9,00 (3,00 - 10,70)	4,27	**7,20 A++**	2,11 (0,43 - 2,81)	1055	10,10	2,06	4,17	4,17			10,40 (2,70 - 14,40)	4,81	**4,20 A+**	2,16 (0,34 - 3,70)	1080	10,20
42+42+42	3,00	3,00	3,00			9,00 (2,90 - 10,70)	3,56	**7,20 A++**	2,53 (0,34 - 3,69)	1265	12,10	3,46	3,46	3,46			10,38 (2,70 - 13,80)	4,45	**4,20 A+**	2,33 (0,25 - 3,78)	1165	10,90
42+42+50	2,82	2,82	3,36			9,00 (2,90 - 10,70)	3,95	**7,20 A++**	2,28 (0,37 - 3,20)	1140	10,90	3,26	3,26	3,88			10,40 (2,70 - 14,10)	4,68	**4,20 A+**	2,22 (0,28 - 3,75)	1110	10,40
42+42+60	2,63	2,63	3,74			9,00 (3,00 - 10,70)	3,95	**7,20 A++**	2,28 (0,37 - 3,20)	1140	10,90	3,03	3,03	4,34			10,40 (2,70 - 14,10)	4,68	**4,20 A+**	2,22 (0,28 - 3,75)	1110	10,40
42+42+71	2,44	2,44	4,12			9,00 (3,00 - 10,70)	3,95	**7,20 A++**	2,28 (0,37 - 3,07)	1140	10,90	2,82	2,82	4,76			10,40 (2,70 - 14,40)	4,71	**4,20 A+**	2,21 (0,28 - 3,85)	1105	10,40
42+50+50	2,66	3,17	3,17			9,00 (3,00 - 10,70)	4,15	**7,20 A++**	2,17 (0,40 - 2,87)	1085	10,40	3,08	3,66	3,66			10,40 (2,70 - 14,10)	4,77	**4,20 A+**	2,18 (0,33 - 3,61)	1090	10,20
42+50+60	2,49	2,96	3,55			9,00 (3,00 - 10,70)	4,15	**7,20 A++**	2,17 (0,40 - 2,87)	1085	10,40	2,87	3,42	4,11			10,40 (2,70 - 14,40)	4,77	**4,20 A+**	2,18 (0,33 - 3,72)	1090	10,20
42+50+71	2,32	2,76	3,92			9,00 (3,00 - 10,70)	4,27	**7,20 A++**	2,11 (0,41 - 2,81)	1055	10,10	2,68	3,19	4,53			10,40 (2,70 - 14,40)	4,79	**4,20 A+**	2,17 (0,34 - 3,71)	1085	10,20
42+60+60	2,34	3,33	3,33			9,00 (3,00 - 10,70)	4,15	**7,20 A++**	2,17 (0,40 - 2,87)	1085	10,40	2,70	3,85	3,85			10,40 (2,70 - 14,40)	4,77	**4,20 A+**	2,18 (0,33 - 3,72)	1090	10,20
42+60+71	2,18	3,12	3,70			9,00 (3,00 - 10,70)	4,27	**7,20 A++**	2,11 (0,41 - 2,81)	1055	10,10	2,52	3,61	4,27			10,40 (2,70 - 14,40)	4,79	**4,20 A+**	2,17 (0,34 - 3,71)	1085	10,20
50+50+50	3,00	3,00	3,00			9,00 (3,00 - 10,70)	4,37	**7,20 A++**	2,06 (0,44 - 2,68)	1030	9,90	3,46	3,46	3,46			10,38 (2,70 - 14,40)	4,83	**4,20 A+**	2,15 (0,40 - 3,64)	1075	10,10
50+50+60	2,81	2,81	3,38			9,00 (3,00 - 10,70)	4,37	**7,20 A++**	2,06 (0,44 - 2,68)	1030	9,90	3,25	3,25	3,90			10,40 (2,70 - 14,40)	4,84	**4,20 A+**	2,15 (0,40 - 3,64)	1075	10,10
50+50+71	2,63	2,63	3,74			9,00 (3,00 - 10,70)	4,37	**7,20 A++**	2,06 (0,47 - 2,69)	1030	9,90	3,04	3,04	4,32			10,40 (2,70 - 14,40)	4,86	**4,20 A+**	2,14 (0,41 - 3,63)	1070	10,10
50+60+60	2,64	3,18	3,18			9,00 (3,00 - 10,70)	4,37	**7,20 A++**	2,06 (0,44 - 2,68)	1030	9,90	3,06	3,67	3,67			10,40 (2,70 - 14,40)	4,84	**4,20 A+**	2,15 (0,40 - 3,64)	1075	10,10
50+60+71	2,49	2,98	3,53			9,00 (3,00 - 10,70)	4,37	**7,20 A++**	2,06 (0,47 - 2,69)	1030	9,90	2,87	3,45	4,08			10,40 (2,70 - 14,40)	4,86	**4,20 A+**	2,14 (0,41 - 3,63)	1070	10,10
60+60+60	3,00	3,00	3,00			9,00 (3,00 - 10,70)	4,37	**7,20 A++**	2,06 (0,44 - 2,68)	1030	9,90	3,46	3,46	3,46			10,38 (2,70 - 14,40)	4,83	**4,20 A+**	2,15 (0,40 - 3,64)	1075	10,10

Free Multi 5x1 CU-5Z90TBE. Minimum capacity connected: 4,5 kW. Maximum capacity connected: 18,3 kW • R32 refrigerant

Indoor unit capacity	Cooling capacity (kW). Rooms						EER	SEER [1]	Input power rating	A.E.C.	Current	Heating capacity (kW). Rooms						COP	SCOP [1]	Input power rating	A.E.C.	Current
	A	B	C	D	E	Total (Min - Max)	W/W		kW	kWh	230V	A	B	C	D	E	Total (Min - Max)	W/W		kW	kWh	230V
4 Rooms																						
16+16+16+16	1,60	1,60	1,60	1,60		6,40 (2,90 - 10,60)	4,57	**8,50 A+++**	1,40 (0,37 - 3,48)	700	6,80	2,35	2,35	2,35	2,35		9,40 (3,40 - 14,20)	4,54	**4,10 A+**	2,07 (0,34 - 3,84)	1035	9,70
16+16+16+20	1,60	1,60	1,60	2,00		6,80 (2,90 - 10,60)	4,42	**8,50 A+++**	1,54 (0,37 - 3,48)	770	7,40	2,33	2,33	2,33	2,91		9,90 (3,40 - 14,20)	4,50	**4,10 A+**	2,20 (0,34 - 3,83)	1100	10,30
16+16+16+25	1,60	1,60	1,60	2,50		7,30 (2,90 - 10,60)	4,29	**8,00 A++**	1,70 (0,37 - 3,48)	850	8,20	2,26	2,26	2,26	3,52		10,30 (3,40 - 14,20)	4,70	**4,20 A+**	2,19 (0,34 - 3,83)	1095	10,30
16+16+16+35	1,60	1,60	1,60	3,50		8,30 (2,90 - 10,60)	3,97	**8,00 A++**	2,09 (0,37 - 3,40)	1045	10,00	2,00	2,00	2,00	4,40		10,40 (3,40 - 14,20)	4,71	**4,20 A+**	2,21 (0,34 - 3,80)	1105	10,40
16+16+16+42	1,60	1,60	1,60	4,20		9,00 (2,90 - 10,60)	3,78	**8,00 A++**	2,38 (0,37 - 3,40)	1190	11,40	1,85	1,85	1,85	4,85		10,40 (3,40 - 14,20)	4,73	**4,40 A+**	2,20 (0,34 - 3,78)	1100	10,30
16+16+16+50	1,47	1,47	1,47	4,59		9,00 (2,90 - 10,60)	4,00	**8,00 A++**	2,25 (0,41 - 3,11)	1125	10,80	1,70	1,70	1,70	5,30		10,40 (3,40 - 14,20)	4,81	**4,40 A+**	2,16 (0,39 - 3,64)	1080	10,20
16+16+16+60	1,33	1,33	1,33	5,01		9,00 (2,90 - 10,60)	4,00	**8,00 A++**	2,25 (0,41 - 3,11)	1125	10,80	1,54	1,54	1,54	5,78		10,40 (3,40 - 14,20)	4,81	**4,40 A+**	2,16 (0,39 - 3,64)	1080	10,20
16+16+16+71	1,21	1,21	1,21	5,37		9,00 (2,90 - 10,60)	3,98	**8,00 A++**	2,26 (0,41 - 3,04)	1130	10,80	1,40	1,40	1,40	6,20		10,40 (3,40 - 14,20)	4,84	**4,40 A+**	2,15 (0,40 - 3,62)	1075	10,10
16+16+20+20	1,60	1,60	2,00	2,00		7,20 (2,90 - 10,60)	4,36	**8,00 A++**	1,65 (0,37 - 3,40)	825	8,00	2,31	2,31	2,89	2,89		10,40 (3,40 - 14,20)	4,66	**4,20 A+**	2,23 (0,34 - 3,82)	1115	10,50
16+16+20+25	1,60	1,60	2,00	2,50		7,70 (2,90 - 10,60)	4,16	**8,00 A++**	1,85 (0,37 - 3,40)	925	8,90	2,16	2,16	2,70	3,38		10,40 (3,40 - 14,20)	4,66	**4,20 A+**	2,23 (0,34 - 3,82)	1115	10,50
16+16+20+35	1,60	1,60	2,00	3,50		8,70 (2,90 - 10,60)	3,87	**8,00 A++**	2,25 (0,37 - 3,33)	1125	10,80	1,91	1,91	2,39	4,19		10,40 (3,40 - 14,20)	4,73	**4,20 A+**	2,20 (0,34 - 3,78)	1100	10,30
16+16+20+42	1,53	1,53	1,91	4,03		9,00 (2,90 - 10,60)	3,78	**8,00 A++**	2,38 (0,37 - 3,33)	1190	11,40	1,77	1,77	2,21	4,65		10,40 (3,40 - 14,20)	4,73	**4,40 A+**	2,20 (0,34 - 3,77)	1100	10,30
16+16+20+50	1,41	1,41	1,76	4,42		9,00 (2,90 - 10,60)	4,00	**8,00 A++**	2,25 (0,41 - 3,11)	1125	10,80	1,63	1,63	2,04	5,10		10,40 (3,40 - 14,20)	4,84	**4,40 A+**	2,15 (0,40 - 3,63)	1075	10,10
16+16+20+60	1,29	1,29	1,60	4,82		9,00 (2,90 - 10,60)	4,00	**8,00 A++**	2,25 (0,41 - 3,11)	1125	10,80	1,49	1,49	1,86	5,56		10,40 (3,40 - 14,20)	4,84	**4,40 A+**	2,15 (0,40 - 3,63)	1075	10,10
16+16+20+71	1,17	1,17	1,46	5,20		9,00 (2,90 - 10,80)	3,98	**8,00 A++**	2,26 (0,41 - 3,18)	1130	10,80	1,35	1,35	1,69	6,01		10,40 (3,40 - 14,20)	4,84	**4,40 A+**	2,15 (0,40 - 3,61)	1075	10,10
16+16+25+25	1,60	1,60	2,50	2,50		8,20 (2,90 - 10,60)	4,04	**8,00 A++**	2,03 (0,37 - 3,40)	1015	9,70	2,03	2,03	3,17	3,17		10,40 (3,40 - 14,20)	4,66	**4,20 A+**	2,23 (0,34 - 3,82)	1115	10,50
16+16+25+35	1,57	1,57	2,44	3,42		9,00 (2,90 - 10,60)	3,78	**8,00 A++**	2,38 (0,37 - 3,33)	1190	11,40	1,81	1,81	2,83	3,95		10,40 (3,40 - 14,20)	4,73	**4,40 A+**	2,20 (0,34 - 3,78)	1100	10,30
16+16+25+42	1,45	1,45	2,27	3,83		9,00 (2,90 - 10,60)	3,78	**8,00 A++**	2,38 (0,37 - 3,33)	1190	11,40	1,68	1,68	2,63	4,41		10,40 (3,40 - 14,20)	4,73	**4,40 A+**	2,20 (0,34 - 3,77)	1100	10,30
16+16+25+50	1,35	1,35	2,09	4,21		9,00 (2,90 - 10,60)	4,00	**8,00 A++**	2,25 (0,41 - 3,11)	1125	10,80	1,56	1,56	2,43	4,85		10,40 (3,40 - 14,20)	4,84	**4,40 A+**	2,15 (0,40 - 3,63)	1075	10,10
16+16+25+60	1,23	1,23	1,92	4,62		9,00 (2,90 - 10,60)	4,00	**8,00 A++**	2,25 (0,41 - 3,11)	1125	10,80	1,42	1,42	2,22	5,34		10,40 (3,40 - 14,20)	4,84	**4,40 A+**	2,15 (0,40 - 3,63)	1075	10,10
16+16+25+71	1,13	1,13	1,75	4,99		9,00 (2,90 - 10,80)	3,98	**8,00 A++**	2,26 (0,41 - 3,18)	1130	10,80	1,30	1,30	2,03	5,77		10,40 (3,40 - 14,40)	4,84	**4,40 A+**	2,15 (0,40 - 3,67)	1075	10,10
16+16+35+35	1,41	1,41	3,09	3,09		9,00 (2,90 - 10,60)	3,78	**8,00 A++**	2,38 (0,37 - 3,33)	1190	11,40	1,63	1,63	3,57	3,57		10,40 (3,40 - 14,20)	4,77	**4,40 A+**	2,18 (0,36 - 3,75)	1090	10,20
16+16+35+42	1,32	1,32	2,89	3,47		9,00 (2,90 - 10,60)	3,90	**8,00 A++**	2,31 (0,37 - 3,25)	1155	11,10	1,53	1,53	3,34	4,00		10,40 (3,40 - 14,20)	4,79	**4,40 A+**	2,17 (0,36 - 3,68)	1085	10,20
16+16+35+50	1,23	1,23	2,69	3,85		9,00 (2,90 - 10,60)	3,98	**8,00 A++**	2,26 (0,41 - 3,04)	1130	10,80	1,42	1,42	3,11	4,45		10,40 (3,40 - 14,20)	4,86	**4,40 A+**	2,14 (0,42 - 3,59)	1070	10,10
16+16+35+60	1,13	1,13	2,48	4,26		9,00 (2,90 - 10,80)	3,98	**8,00 A++**	2,26 (0,41 - 3,18)	1130	10,80	1,31	1,31	2,87	4,91		10,40 (3,40 - 14,20)	4,86	**4,40 A+**	2,14 (0,42 - 3,59)	1070	10,10
16+16+35+71	1,04	1,04	2,28	4,64		9,00 (2,90 - 10,80)	4,09	**8,00 A++**	2,20 (0,44 - 3,11)	1100	10,50	1,21	1,21	2,64	5,34		10,40 (3,40 - 14,40)	4,88	**4,40 A+**	2,13 (0,42 - 3,64)	1065	10,00
16+16+42+42	1,24	1,24	3,26	3,26		9,00 (2,90 - 10,60)	3,90	**8,00 A++**	2,31 (0,37 - 3,25)	1155	11,10	1,43	1,43	3,77	3,77		10,40 (3,40 - 14,20)	4,79	**4,40 A+**	2,17 (0,37 - 3,66)	1085	10,20
16+16+42+50	1,16	1,16	3,05	3,63		9,00 (2,90 - 10,80)	3,98	**8,00 A++**	2,26 (0,41 - 3,18)	1130	10,80	1,34	1,34	3,52	4,20		10,40 (3,40 - 14,20)	4,88	**4,40 A+**	2,13 (0,42 - 3,58)	1065	10,00
16+16+42+60	1,07	1,07	2,82	4,04		9,00 (2,90 - 10,80)	3,98	**8,00 A++**	2,26 (0,41 - 3,18)	1130	10,80	1,24	1,24	3,26	4,66		10,40 (3,40 - 14,40)	4,88	**4,40 A+**	2,13 (0,42 - 3,64)	1065	10,00
16+16+42+71	0,99	0,99	2,61	4,41		9,00 (3,00 - 11,00)	4,09	**8,00 A++**	2,20 (0,44 - 3,26)	1100	10,50	1,15	1,15	3,01	5,09		10,40 (3,40 - 14,40)	4,81	**4,40 A+**	2,16 (0,43 - 3,62)	1080	10,20
16+16+50+50	1,09	1,09	3,41	3,41		9,00 (2,90 - 10,80)	4,07	**8,00 A++**	2,21 (0,48 - 2,98)	1105	10,60	1,26	1,26	3,94	3,94		10,40 (3,40 - 14,40)	4,81	**4,40 A+**	2,16 (0,49 - 3,57)	1080	10,20
16+16+50+60	1,01	1,01	3,17	3,81		9,00 (3,00 - 11,00)	4,07	**8,00 A++**	2,21 (0,48 - 3,12)	1105	10,60	1,17	1,17	3,66	4,40		10,40 (3,40 - 14,40)	4,81	**4,40 A+**	2,16 (0,49 - 3,57)	1080	10,20
16+16+50+71	0,94	0,94	2,94	4,18		9,00 (3,00 - 11,00)	4,07	**8,00 A++**	2,21 (0,52 - 3,12)	1105	10,60	1,09	1,09	3,40	4,82		10,40 (3,40 - 14,40)	4,84	**4,40 A+**	2,15 (0,51 - 3,55)	1075	10,10
16+16+60+60	0,95	0,95	3,55	3,55		9,00 (3,00 - 11,00)	4,07	**8,00 A++**	2,21 (0,48 - 3,12)	1105	10,60	1,09	1,09	4,11	4,11		10,40 (3,40 - 14,40)	4,81	**4,40 A+**	2,16 (0,49 - 3,57)	1080	10,20
16+16+60+71	0,88	0,88	3,31	3,93		9,00 (3,00 - 11,20)	4,07	**8,00 A++**	2,21 (0,52 - 3,20)	1105	10,60	1,02	1,02	3,83	4,53		10,40 (3,40 - 14,40)	4,84	**4,40 A+**	2,15 (0,51 - 3,55)	1075	10,10
16+16+71+71	0,83	0,83	3,67	3,67		9,00 (3,00 - 11,20)	4,19	**8,00 A++**	2,15 (0,52 - 3,20)	1075	10,30	0,96	0,96	4,24	4,24		10,40 (3,40 - 14,40)	4,86	**4,40 A+**	2,14 (0,51 - 3,60)	1070	10,10
16+20+20+20	1,60	2,00	2,00	2,00		7,60 (2,90 - 10,60)	4,18	**8,00 A++**	1,82 (0,37 - 3,40)	910	8,70	2,18	2,74	2,74	2,74		10,40 (3,40 - 14,20)	4,68	**4,20 A+**	2,22 (0,34 - 3,81)	1110	10,40
16+20+20+25	1,60	2,00	2,00	2,50		8,10 (2,90 - 10,60)	4,11	**8,00 A++**	1,97 (0,37 - 3,40)	985	9,40	2,05	2,57	2,57	3,21		10,40 (3,40 - 14,20)	4,68	**4,20 A+**	2,22 (0,34 - 3,81)	1110	10,40
16+20+20+35	1,58	1,98	1,98	3,46		9,00 (2,90 - 10,60)	3,78	**8,00 A++**	2,38 (0,37 - 3,33)	1190	11,40	1,83	2,29	2,29	3,99		10,40 (3,40 - 14,20)	4,73	**4,40 A+**	2,20 (0,34 - 3,77)	1100	10,30
16+20+20+42	1,46	1,84	1,84	3,86		9,00 (2,90 - 10,60)	3,78	**8,00 A++**	2,38 (0,37 - 3,33)	1190	11,40	1,70	2,12	2,12	4,46		10,40 (3,40 - 14,20)	4,75	**4,40 A+**	2,19 (0,35 - 3,76)	1095	10,30
16+20+20+50	1,35	1,70	1,70	4,25		9,00 (2,90 - 10,60)	4,00	**8,00 A++**	2,25 (0,41 - 3,04)	1125	10,80	1,57	1,96	1,96	4,91		10,40 (3,40 - 14,20)	4,84	**4,40 A+**	2,15 (0,40 - 3,62)	1075	10,10
16+20+20+60	1,24	1,55	1,55	4,66		9,00 (2,90 - 10,60)	4,00	**8,00 A++**	2,25 (0,41 - 3,04)	1125	10,80	1,43	1,79	1,79	5,39		10,40 (3,40 - 14,20)	4,84	**4,40 A+**	2,15 (0,40 - 3,62)	1075	10,10
16+20+20+71	1,13	1,42	1,42	5,03		9,00 (2,90 - 10,80)	3,98	**8,00 A++**	2,26 (0,44 - 3,11)	1130	10,80	1,31	1,64	1,64	5,81		10,40 (3,40 - 14,20)	4,86	**4,40 A+**	2,14 (0,42 - 3,60)	1070	10,10
16+20+25+25	1,60	2,00	2,50	2,50		8,60 (2,90 - 10,60)	3,89	**8,00 A++**	2,21 (0,37 - 3,40)	1105	10,60	1,93	2,43	3,02	3,02		10,40 (3,40 - 14,20)	4,68	**4,20 A+**	2,22 (0,34 - 3,81)	1110	10,40
16+20+25+35	1,50	1,88	2,34	3,28		9,00 (2,90 - 10,60)	3,78	**8,00 A++**	2,38 (0,37 - 3,33)	1190	11,40	1,73	2,17	2,71	3,79		10,40 (3,40 - 14,20)	4,73	**4,40 A+**	2,20 (0,34 - 3,77)	1100	10,30
16+20+25+42	1,40	1,75	2,18	3,67		9,00 (2,90 - 10,60)	3,78	**8,00 A++**	2,38 (0,37 - 3,33)	1190	11,40	1,62	2,02	2,52	4,24		10,40 (3,40 - 14,20)	4,75	**4,40 A+**	2,19 (0,35 - 3,76)	1095	10,30
16+20+25+50	1,30	1,62	2,03	4,05		9,00 (2,90 - 10,60)	4,00	**8,00 A++**	2,25 (0,41 - 3,04)	1125	10,80	1,50	1,87	2,34	4,69		10,40 (3,40 - 14,20)	4,84	**4,40 A+**	2,15 (0,40 - 3,62)	1075	10,10
16+20+25+60	1,19	1,49	1,86	4,46		9,00 (2,90 - 10,80)	4,00	**8,00 A++**	2,25 (0,41 - 3,18)	1125	10,80	1,38	1,72	2,15	5,15		10,40 (3,40 - 14,20)	4,84	**4,40 A+**	2,15 (0,40 - 3,62)	1075	10,10
16+20+25+71	1,09	1,36	1,70	4,85		9,00 (2,90 - 10,80)	3,98	**8,00 A++**	2,26 (0,44 - 3,11)	1130	10,80	1,26	1,58	1,97	5,59		10,40 (3,40 - 14,40)	4,86	**4,40 A+**	2,14 (0,42 - 3,66)	1070	10,10
16+20+35+35	1,36	1,70	2,97	2,97		9,00 (2,90 - 10,60)	3,90	**8,00 A++**	2,31 (0,37 - 3,25)	1155	11,10	1,57	1,97	3,43	3,43		10,40 (3,40 - 14,20)	4,79	**4,40 A+**	2,17 (0,36 - 3,68)	1085	10,20
16+20+35+42	1,27	1,59	2,79	3,35		9,00 (2,90 - 10,60)	3,90	**8,00 A++**	2,31 (0,37 - 3,25)	1155	11,10	1,47	1,84	3,22	3,87		10,40 (3,40 - 14,20)	4,79	**4,40 A+**	2,17 (0,37 - 3,66)	1085	10,20
16+20+35+50	1,19	1,49	2,60	3,72		9,00 (2,90 - 10,80)	3,98	**8,00 A++**	2,26 (0,41 - 3,18)	1130	10,80	1,38	1,72	3,01	4,29		10,40 (3,40 - 14,20)	4,88	**4,40 A+**	2,13 (0,42 - 3,58)	1065	10,00
16+20+35+60	1,10	1,37	2,40	4,13		9,00 (2,90 - 10,80)	3,98	**8,00 A++**	2,26 (0,41 - 3,18)	1130	10,80	1,27	1,59	2,78	4,76		10,40 (3,40 - 14,40)	4,88	**4,40 A+**	2,13 (0,42 - 3,64)	1065	10,00
16+20+35+71	1,01	1,27	2,22	4,50		9,00 (3,00 - 11,00)	4,09	**8,00 A++**	2,20 (0,44 - 3,26)	1100	10,50	1,17	1,46	2,56	5,21		10,40 (3,40 - 14,40)	4,81	**4,40 A+**	2,16 (0,43 - 3,62)	1080	10,20
16+20+42+42	1,20	1,50	3,15	3,15		9,00 (2,90 - 10,60)	3,90	**8,00 A++**	2,31 (0,37 - 3,25)	1155	11,10	1,39	1,73	3,64	3,64		10,40 (3,40 - 14,20)	4,81	**4,40 A+**	2,16 (0,37 - 3,65)	1080	10,20
16+20+42+50	1,12	1,41	2,95	3,52		9,00 (2,90 - 10,80)	3,98	**8,00 A++**	2,26 (0,44 - 3,11)	1130	10,80	1,30	1,63	3,41	4,06		10,40 (3,40 - 14,40)	4,91	**4,40 A+**	2,12 (0,42 - 3,63)	1060	10,00
16+20+42+60	1,04	1,30	2,74	3,92		9,00 (2,90 - 10,80)	3,98	**8,00 A++**	2,26 (0,44 - 3,11)	1130	10,80	1,21	1,51	3,17	4,51		10,40 (3,40 - 14,40)	4,91	**4,40 A+**	2,12 (0,42 - 3,63)	1060	10,00
16+20+42+71	0,96	1,21	2,54	4,29		9,00 (3,00 - 11,00)	4,09	**8,00 A++**	2,20 (0,44 - 3,19)	1100	10,50	1,12	1,40	2,93	4,95		10,40 (3,40 - 14,40)	4,81	**4,40 A+**	2,16 (0,43 - 3,61)	1080	10,20
16+20+50+50	1,06	1,32	3,31	3,31		9,00 (2,90 - 10,80)	4,07	**8,00 A++**	2,21 (0,49 - 2,98)	1105	10,60	1,22	1,54	3,82	3,82		10,40 (3,40 - 14,40)	4,84	**4,40 A+**	2,15 (0,50 - 3,56)	1075	10,10
16+20+50+60	0,99	1,23	3,08	3,70		9,00 (3,00 - 11,00)	4,07	**8,00 A++**	2,21 (0,49 - 3,12)	1105	10,60	1,14	1,42	3,56	4,28		10,40 (3,40 - 14,40)	4,84	**4,40 A+**	2,15 (0,50 - 3,56)	1075	10,10
16+20+50+71	0,91	1,15	2,87	4,07		9,00 (3,00 - 11,00)	4,07	**8,00 A++**	2,21 (0,52 - 3,05)	1105	10,60	1,06	1,32	3,31	4,71		10,40 (3,40 - 14,40)	4,84	**4,40 A+**	2,15 (0,51 - 3,60)	1075	10,10
16+20+60+60	0,92	1,16	3,46	3,46		9,00 (3,00 - 11,00)	4,07	**8,00 A++**	2,21 (0,49 - 3,12)	1105	10,60	1,07	1,33	4,00	4,00		10,40 (3,40 - 14,40)	4,84	**4,40 A+**	2,15 (0,50 - 3,56)	1075	10,10
16+20+60+71	0,86	1,08	3,23	3,83		9,00 (3,00 - 11,20)	4,07	**8,00 A++**	2,21 (0,52 - 3,20)	1105	10,60	1,00	1,25	3,74	4,41		10,40 (3,40 - 14,40)	4,84	**4,40 A+**	2,15 (0,51 - 3,60)	1075	10,10
16+20+71+71	0,81	1,01	3,59	3,59		9,00 (3,00 - 11,20)	4,17	**8,00 A++**	2,16 (0,53 - 3,20)	1080	10,30	0,93	1,17	4,15	4,15		10,40 (3,40 - 14,40)	4,77	**4,40 A+**	2,18 (0,52 - 3,59)	1090	10,20
16+25+25+25	1,59	2,47	2,47	2,47		9,00 (2,90 - 10,60)	3,78	**8,00 A++**	2,38 (0,37 - 3,40)	1190	11,40	1,82	2,86	2,86	2,86		10,40 (3,40 - 14,20)	4,68	**4,40 A+**	2,22 (0,34 - 3,81)	1110	10,40
16+25+25+35	1,42	2,23	2,23	3,12		9,00 (2,90 - 10,60)	3,78	**8,00 A++**	2,38 (0,37 - 3,33)	1190	11,40	1,65	2,57	2,57	3,61		10,40 (3,40 - 14,20)	4,73	**4,40 A+**	2,20 (0,34 - 3,77)	1100	10,30
16+25+25+42	1,33	2,08	2,08	3,51		9,00 (2,90 - 10,60)	3,78	**8,00 A++**	2,38 (0,37 - 3,33)	1190	11,40	1,54	2,41	2,41	4,04		10,40 (3,40 - 14,20)	4,75	**4,40 A+**	2,19 (0,35 - 3,76)	1095	10,30
16+25+25+50	1,24	1,94	1,94	3,88		9,00 (2,90 - 10,60)	4,00	**8,00 A++**	2,25 (0,41 - 3,04)	1125	10,80	1,43	2,24	2,24	4,49		10,40 (3,40 - 14,20)	4,84	**4,40 A+**	2,15 (0,40 - 3,62)	1075	10,10
16+25+25+60	1,13	1,79	1,79	4,29		9,00 (2,90 - 10,80)	4,00	**8,00 A++**	2,25 (0,41 - 3,18)	1125	10,80	1,32	2,06	2,06	4,96		10,40 (3,40 - 14,20)	4,84	**4,40 A+**	2,15 (0,40 - 3,62)	1075	10,10
16+25+25+71	1,05	1,64	1,64	4,67		9,00 (2,90 - 10,80)	3,98	**8,00 A++**	2,26 (0,44 - 3,11)	1130	10,80	1,21	1,90	1,90	5,39		10,40 (3,40 - 14,40)	4,86	**4,40 A+**	2,14 (0,42 - 3,66)	1070	10,10
16+25+35+35	1,29	2,03	2,84	2,84		9,00 (2,90 - 10,60)	3,90	**8,00 A++**	2,31 (0,37 - 3,25)	1155	11,10	1,50	2,34	3,28	3,28		10,40 (3,40 - 14,20)	4,79	**4,40 A+**	2,17 (0,36 - 3,68)	1085	10,20
16+25+35+42	1,22	1,91	2,67	3,20		9,00 (2,90 - 10,60)	3,90	**8,00 A++**	2,31 (0,37 - 3,25)	1155	11,10	1,41	2,20	3,08	3,71		10,40 (3,40 - 14,20)	4,79	**4,40 A+**	2,17 (0,37 - 3,66)	1085	10,20
16+25+35+50	1,14	1,79	2,50	3,57		9,00 (2,90 - 10,80)	3,98	**8,00 A++**	2,26 (0,41 - 3,18)	1130	10,80	1,32	2,06	2,89	4,13		10,40 (3,40 - 14,20)	4,88	**4,40 A+**	2,13 (0,42 - 3,58)	1065	10,00
16+25+35+60	1,06	1,65	2,32	3,97		9,00 (2,90 - 10,80)	3,98	**8,00 A++**	2,26 (0,41 - 3,18)	1130	10,80	1,22	1,91	2,68	4,59		10,40 (3,40 - 14,40)	4,88	**4,40 A+**	2,13 (0,42 - 3,64)	1065	10,00
16+25+35+71	0,98	1,53	2,14	4,35		9,00 (3,00 - 11,00)	4,09	**8,00 A++**	2,20 (0,44 - 3,26)	1100	10,50	1,13	1,77	2,48	5,02		10,40 (3,40 - 14,40)	4,81	**4,40 A+**	2,16 (0,43 - 3,62)	1080	10,20
16+25+42+42	1,15	1,81	3,02	3,02		9,00 (2,90 - 10,80)	3,90	**8,00 A++**	2,31 (0,37 - 3,40)	1155	11,10	1,33	2,09	3,49	3,49		10,40 (3,40 - 14,20)	4,81	**4,40 A+**	2,16 (0,37 - 3,65)	1080	10,20
16+25+42+50	1,08	1,69	2,84	3,39		9,00 (2,90 - 10,80)	3,98	**8,00 A++**	2,26 (0,44 - 3,11)	1130	10,80	1,25	1,95	3,28	3,92		10,40 (3,40 - 14,40)	4,91	**4,40 A+**	2,12 (0,42 - 3,63)	1060	10,00
16+25+42+60	1,01	1,57	2,64	3,78		9,00 (3,00 - 11,00)	3,98	**8,00 A++**	2,26 (0,44 - 3,26)	1130	10,80	1,16	1,82	3,05	4,37		10,40 (3,40 - 14,40)	4,91	**4,40 A+**	2,12 (0,42 - 3,63)	1060	10,00
16+25+42+71	0,94	1,46	2,45	4,15		9,00 (3,00 - 11,00)	4,09	**8,00 A++**	2,20 (0,44 - 3,19)	1100	10,50	1,08	1,69	2,84	4,79		10,40 (3,40 - 14,40)	4,81	**4,40 A+**	2,16 (0,43 - 3,61)	1080	10,20
16+25+50+50	1,02	1,60	3,19	3,19		9,00 (2,90 - 10,80)	4,07	**8,00 A++**	2,21 (0,49 - 2,98)	1105	10,60	1,18	1,84	3,69	3,69		10,40 (3,40 - 14,40)	4,84	**4,40 A+**	2,15 (0,50 - 3,56)	1075	10,10

Rating Conditions: Cooling Indoor 27°C DB / 19°C WB. Cooling Outdoor 35°C DB / 24°C WB. Heating Indoor 20°C DB. Heating Outdoor 7°C DB / 6°C WB. (DB: Dry Bulb; WB: Wet Bulb).
Specifications subject to change without notice. For detailed information about ErP / Energy Labelling, please visit our websites www.aircon.panasonic.eu or www.ptc.panasonic.eu.

Free Multi R32 combinations table

Free Multi 5x1 CU-5Z90TBE. Minimum capacity connected: 4,5 kW. Maximum capacity connected: 18,3 kW • R32 refrigerant

Indoor unit capacity	Cooling capacity (kW). Rooms						EER	SEER [1]	Input power rating	A.E.C.	Current	Heating capacity (kW). Rooms						COP	SCOP [1]	Input power rating	A.E.C.	Current
	A	B	C	D	E	Total (Min - Max)	W/W		kW	kWh	230V	A	B	C	D	E	Total (Min - Max)	W/W		kW	kWh	230V
16+25+50+60	0,95	1,49	2,98	3,58		9,00 (3,00 - 11,00)	4,07	**8,00 A++**	2,21 (0,49 - 3,12)	1105	10,60	1,10	1,72	3,44	4,14		10,40 (3,40 - 14,40)	4,84	**4,40 A+**	2,15 (0,50 - 3,56)	1075	10,10
16+25+50+71	0,89	1,39	2,78	3,94		9,00 (3,00 - 11,20)	4,07	**8,00 A++**	2,21 (0,52 - 3,20)	1105	10,60	1,03	1,60	3,21	4,56		10,40 (3,40 - 14,40)	4,84	**4,40 A+**	2,15 (0,51 - 3,60)	1075	10,10
16+25+60+60	0,89	1,41	3,35	3,35		9,00 (3,00 - 11,20)	4,07	**8,00 A++**	2,21 (0,49 - 3,19)	1105	10,60	1,03	1,61	3,88	3,88		10,40 (3,40 - 14,40)	4,84	**4,40 A+**	2,15 (0,50 - 3,56)	1075	10,10
16+25+60+71	0,83	1,31	3,14	3,72		9,00 (3,00 - 11,20)	4,07	**8,00 A++**	2,21 (0,52 - 3,20)	1105	10,60	0,97	1,51	3,63	4,29		10,40 (3,40 - 14,40)	4,84	**4,40 A+**	2,15 (0,51 - 3,60)	1075	10,10
16+25+71+71	0,79	1,23	3,49	3,49		9,00 (3,00 - 11,20)	4,17	**8,00 A++**	2,16 (0,53 - 3,20)	1080	10,30	0,91	1,43	4,03	4,03		10,40 (3,40 - 14,40)	4,77	**4,40 A+**	2,18 (0,52 - 3,59)	1090	10,20
16+35+35+35	1,20	2,60	2,60	2,60		9,00 (2,90 - 10,80)	3,90	**8,00 A++**	2,31 (0,38 - 3,33)	1155	11,10	1,37	3,01	3,01	3,01		10,40 (3,40 - 14,20)	4,84	**4,40 A+**	2,15 (0,37 - 3,64)	1075	10,10
16+35+35+42	1,13	2,46	2,46	2,95		9,00 (2,90 - 10,80)	3,90	**8,00 A++**	2,31 (0,40 - 3,33)	1155	11,10	1,30	2,84	2,84	3,42		10,40 (3,40 - 14,40)	4,75	**4,40 A+**	2,19 (0,37 - 3,75)	1095	10,30
16+35+35+50	1,05	2,32	2,32	3,31		9,00 (2,90 - 10,80)	4,09	**8,00 A++**	2,20 (0,44 - 3,11)	1100	10,50	1,22	2,68	2,68	3,82		10,40 (3,40 - 14,40)	4,81	**4,40 A+**	2,16 (0,43 - 3,61)	1080	10,20
16+35+35+60	0,98	2,16	2,16	3,70		9,00 (3,00 - 11,00)	4,09	**8,00 A++**	2,20 (0,44 - 3,26)	1100	10,50	1,14	2,49	2,49	4,28		10,40 (3,40 - 14,40)	4,81	**4,40 A+**	2,16 (0,43 - 3,61)	1080	10,20
16+35+35+71	0,91	2,01	2,01	4,07		9,00 (3,00 - 11,00)	4,09	**8,00 A++**	2,20 (0,47 - 3,19)	1100	10,50	1,06	2,32	2,32	4,70		10,40 (3,40 - 14,40)	4,84	**4,40 A+**	2,15 (0,45 - 3,65)	1075	10,10
16+35+42+42	1,07	2,33	2,80	2,80		9,00 (2,90 - 10,80)	3,90	**8,00 A++**	2,31 (0,40 - 3,33)	1155	11,10	1,22	2,70	3,24	3,24		10,40 (3,40 - 14,40)	4,77	**4,40 A+**	2,18 (0,37 - 3,73)	1090	10,20
16+35+42+50	1,01	2,20	2,64	3,15		9,00 (3,00 - 11,00)	4,09	**8,00 A++**	2,20 (0,44 - 3,26)	1100	10,50	1,16	2,55	3,05	3,64		10,40 (3,40 - 14,40)	4,84	**4,40 A+**	2,15 (0,45 - 3,65)	1075	10,10
16+35+42+60	0,94	2,06	2,47	3,53		9,00 (3,00 - 11,00)	4,09	**8,00 A++**	2,20 (0,44 - 3,26)	1100	10,50	1,09	2,38	2,85	4,08		10,40 (3,40 - 14,40)	4,84	**4,40 A+**	2,15 (0,45 - 3,65)	1075	10,10
16+35+42+71	0,88	1,92	2,30	3,90		9,00 (3,00 - 11,20)	4,09	**8,00 A++**	2,20 (0,47 - 3,33)	1100	10,50	1,01	2,22	2,66	4,51		10,40 (3,40 - 14,40)	4,86	**4,40 A+**	2,14 (0,45 - 3,64)	1070	10,10
16+35+50+50	0,95	2,09	2,98	2,98		9,00 (3,00 - 11,00)	4,07	**8,00 A++**	2,21 (0,52 - 3,05)	1105	10,60	1,10	2,42	3,44	3,44		10,40 (3,40 - 14,40)	4,77	**4,40 A+**	2,18 (0,52 - 3,59)	1090	10,20
16+35+50+60	0,89	1,96	2,80	3,35		9,00 (3,00 - 11,20)	4,07	**8,00 A++**	2,21 (0,52 - 3,20)	1105	10,60	1,03	2,26	3,23	3,88		10,40 (3,40 - 14,40)	4,77	**4,40 A+**	2,18 (0,52 - 3,59)	1090	10,20
16+35+50+71	0,83	1,83	2,62	3,72		9,00 (3,00 - 11,20)	4,19	**8,00 A++**	2,15 (0,52 - 3,20)	1075	10,30	0,97	2,12	3,02	4,29		10,40 (3,40 - 14,40)	4,77	**4,40 A+**	2,18 (0,54 - 3,57)	1090	10,20
16+35+60+60	0,84	1,84	3,16	3,16		9,00 (3,00 - 11,20)	4,07	**8,00 A++**	2,21 (0,52 - 3,20)	1105	10,60	0,97	2,13	3,65	3,65		10,40 (3,40 - 14,40)	4,77	**4,40 A+**	2,18 (0,52 - 3,59)	1090	10,20
16+35+60+71	0,79	1,73	2,97	3,51		9,00 (3,00 - 11,20)	4,19	**8,00 A++**	2,15 (0,52 - 3,20)	1075	10,30	0,91	2,00	3,43	4,06		10,40 (3,40 - 14,40)	4,77	**4,40 A+**	2,18 (0,54 - 3,57)	1090	10,20
16+42+42+42	1,02	2,66	2,66	2,66		9,00 (3,00 - 11,00)	3,90	**8,00 A++**	2,31 (0,40 - 3,48)	1155	11,10	1,16	3,08	3,08	3,08		10,40 (3,40 - 14,40)	4,79	**4,40 A+**	2,17 (0,39 - 3,72)	1085	10,20
16+42+42+50	0,96	2,52	2,52	3,00		9,00 (3,00 - 11,00)	4,09	**8,00 A++**	2,20 (0,44 - 3,19)	1100	10,50	1,11	2,91	2,91	3,47		10,40 (3,40 - 14,40)	4,84	**4,40 A+**	2,15 (0,45 - 3,64)	1075	10,10
16+42+42+60	0,90	2,36	2,36	3,38		9,00 (3,00 - 11,20)	4,09	**8,00 A++**	2,20 (0,44 - 3,33)	1100	10,50	1,04	2,73	2,73	3,90		10,40 (3,40 - 14,40)	4,84	**4,40 A+**	2,15 (0,45 - 3,64)	1075	10,10
16+42+42+71	0,84	2,21	2,21	3,74		9,00 (3,00 - 11,20)	4,09	**8,00 A++**	2,20 (0,48 - 3,34)	1100	10,50	0,97	2,55	2,55	4,33		10,40 (3,40 - 14,40)	4,86	**4,40 A+**	2,14 (0,46 - 3,63)	1070	10,10
16+42+50+50	0,91	2,39	2,85	2,85		9,00 (3,00 - 11,20)	4,07	**8,00 A++**	2,21 (0,52 - 3,20)	1105	10,60	1,05	2,77	3,29	3,29		10,40 (3,40 - 14,40)	4,77	**4,40 A+**	2,18 (0,53 - 3,58)	1090	10,20
16+42+50+60	0,86	2,25	2,68	3,21		9,00 (3,00 - 11,20)	4,07	**8,00 A++**	2,21 (0,52 - 3,20)	1105	10,60	0,99	2,60	3,10	3,71		10,40 (3,40 - 14,40)	4,77	**4,40 A+**	2,18 (0,53 - 3,58)	1090	10,20
16+42+50+71	0,80	2,11	2,51	3,58		9,00 (3,00 - 11,20)	4,17	**8,00 A++**	2,16 (0,53 - 3,20)	1080	10,30	0,93	2,44	2,91	4,12		10,40 (3,40 - 14,40)	4,79	**4,40 A+**	2,17 (0,54 - 3,56)	1085	10,20
16+42+60+60	0,81	2,13	3,03	3,03		9,00 (3,00 - 11,20)	4,07	**8,00 A++**	2,21 (0,52 - 3,20)	1105	10,60	0,93	2,45	3,51	3,51		10,40 (3,40 - 14,40)	4,77	**4,40 A+**	2,18 (0,53 - 3,58)	1090	10,20
16+50+50+50	0,87	2,71	2,71	2,71		9,00 (3,00 - 11,20)	4,15	**8,00 A++**	2,17 (0,57 - 3,14)	1085	10,40	1,01	3,13	3,13	3,13		10,40 (3,40 - 14,40)	4,66	**4,40 A+**	2,23 (0,63 - 3,58)	1115	10,50
16+50+50+60	0,81	2,56	2,56	3,07		9,00 (3,00 - 11,20)	4,15	**8,00 A++**	2,17 (0,57 - 3,14)	1085	10,40	0,95	2,95	2,95	3,55		10,40 (3,40 - 14,40)	4,66	**4,40 A+**	2,23 (0,63 - 3,58)	1115	10,50
20+20+20+20	2,00	2,00	2,00	2,00		8,00 (2,90 - 10,60)	4,06	**8,00 A++**	1,97 (0,37 - 3,40)	985	9,40	2,60	2,60	2,60	2,60		10,40 (3,40 - 14,20)	4,71	**4,20 A+**	2,21 (0,34 - 3,79)	1105	10,40
20+20+20+25	2,00	2,00	2,00	2,50		8,50 (2,90 - 10,60)	3,95	**8,00 A++**	2,15 (0,37 - 3,40)	1075	10,30	2,45	2,45	2,45	3,05		10,40 (3,40 - 14,20)	4,71	**4,20 A+**	2,21 (0,34 - 3,79)	1105	10,40
20+20+20+35	1,89	1,89	1,89	3,33		9,00 (2,90 - 10,60)	3,78	**8,00 A++**	2,38 (0,37 - 3,33)	1190	11,40	2,19	2,19	2,19	3,83		10,40 (3,40 - 14,20)	4,75	**4,40 A+**	2,19 (0,35 - 3,76)	1095	10,30
20+20+20+42	1,76	1,76	1,76	3,72		9,00 (2,90 - 10,60)	3,78	**8,00 A++**	2,38 (0,37 - 3,33)	1190	11,40	2,04	2,04	2,04	4,28		10,40 (3,40 - 14,20)	4,77	**4,40 A+**	2,18 (0,36 - 3,74)	1090	10,20
20+20+20+50	1,64	1,64	1,64	4,08		9,00 (2,90 - 10,60)	4,00	**8,00 A++**	2,25 (0,41 - 3,04)	1125	10,80	1,89	1,89	1,89	4,73		10,40 (3,40 - 14,20)	4,86	**4,40 A+**	2,14 (0,42 - 3,60)	1070	10,10
20+20+20+60	1,50	1,50	1,50	4,50		9,00 (2,90 - 10,60)	4,00	**8,00 A++**	2,25 (0,41 - 3,04)	1125	10,80	1,73	1,73	1,73	5,21		10,40 (3,40 - 14,20)	4,86	**4,40 A+**	2,14 (0,42 - 3,60)	1070	10,10
20+20+20+71	1,37	1,37	1,37	4,89		9,00 (2,90 - 10,80)	4,09	**8,00 A++**	2,20 (0,44 - 3,11)	1100	10,50	1,59	1,59	1,59	5,63		10,40 (3,40 - 14,40)	4,88	**4,40 A+**	2,13 (0,42 - 3,64)	1065	10,00
20+20+25+25	2,00	2,00	2,50	2,50		9,00 (2,90 - 10,60)	3,78	**8,00 A++**	2,38 (0,37 - 3,40)	1190	11,40	2,31	2,31	2,89	2,89		10,40 (3,40 - 14,20)	4,71	**4,40 A+**	2,21 (0,34 - 3,79)	1105	10,40
20+20+25+35	1,80	1,80	2,25	3,15		9,00 (2,90 - 10,60)	3,78	**8,00 A++**	2,38 (0,37 - 3,33)	1190	11,40	2,08	2,08	2,60	3,64		10,40 (3,40 - 14,20)	4,75	**4,40 A+**	2,19 (0,35 - 3,76)	1095	10,30
20+20+25+42	1,68	1,68	2,10	3,54		9,00 (2,90 - 10,60)	3,78	**8,00 A++**	2,38 (0,37 - 3,33)	1190	11,40	1,94	1,94	2,43	4,09		10,40 (3,40 - 14,20)	4,77	**4,40 A+**	2,18 (0,36 - 3,74)	1090	10,20
20+20+25+50	1,57	1,57	1,95	3,91		9,00 (2,90 - 10,60)	4,00	**8,00 A++**	2,25 (0,41 - 3,04)	1125	10,80	1,81	1,81	2,26	4,52		10,40 (3,40 - 14,20)	4,86	**4,40 A+**	2,14 (0,42 - 3,60)	1070	10,10
20+20+25+60	1,44	1,44	1,80	4,32		9,00 (2,90 - 10,80)	4,00	**8,00 A++**	2,25 (0,41 - 3,18)	1125	10,80	1,66	1,66	2,08	5,00		10,40 (3,40 - 14,20)	4,86	**4,40 A+**	2,14 (0,42 - 3,60)	1070	10,10
20+20+25+71	1,32	1,32	1,65	4,71		9,00 (2,90 - 10,80)	4,09	**8,00 A++**	2,20 (0,44 - 3,11)	1100	10,50	1,53	1,53	1,91	5,43		10,40 (3,40 - 14,40)	4,88	**4,40 A+**	2,13 (0,42 - 3,64)	1065	10,00
20+20+35+35	1,64	1,64	2,86	2,86		9,00 (2,90 - 10,60)	3,90	**8,00 A++**	2,31 (0,37 - 3,25)	1155	11,10	1,89	1,89	3,31	3,31		10,40 (3,40 - 14,20)	4,79	**4,40 A+**	2,17 (0,37 - 3,66)	1085	10,20
20+20+35+42	1,54	1,54	2,69	3,23		9,00 (2,90 - 10,60)	3,90	**8,00 A++**	2,31 (0,37 - 3,25)	1155	11,10	1,78	1,78	3,11	3,73		10,40 (3,40 - 14,20)	4,81	**4,40 A+**	2,16 (0,37 - 3,65)	1080	10,20
20+20+35+50	1,44	1,44	2,52	3,60		9,00 (2,90 - 10,80)	3,98	**8,00 A++**	2,26 (0,44 - 3,11)	1130	10,80	1,66	1,66	2,91	4,17		10,40 (3,40 - 14,20)	4,91	**4,40 A+**	2,12 (0,42 - 3,57)	1060	10,00
20+20+35+60	1,33	1,33	2,33	4,01		9,00 (2,90 - 10,80)	3,98	**8,00 A++**	2,26 (0,44 - 3,11)	1130	10,80	1,54	1,54	2,70	4,62		10,40 (3,40 - 14,40)	4,91	**4,40 A+**	2,12 (0,42 - 3,63)	1060	10,00
20+20+35+71	1,23	1,23	2,16	4,38		9,00 (3,00 - 11,00)	4,09	**8,00 A++**	2,20 (0,44 - 3,19)	1100	10,50	1,42	1,42	2,49	5,07		10,40 (3,40 - 14,40)	4,81	**4,40 A+**	2,16 (0,43 - 3,61)	1080	10,20
20+20+42+42	1,45	1,45	3,05	3,05		9,00 (2,90 - 10,80)	3,90	**8,00 A++**	2,31 (0,37 - 3,40)	1155	11,10	1,68	1,68	3,52	3,52		10,40 (3,40 - 14,20)	4,75	**4,40 A+**	2,19 (0,37 - 3,64)	1095	10,30
20+20+42+50	1,36	1,36	2,86	3,42		9,00 (2,90 - 10,80)	4,09	**8,00 A++**	2,20 (0,44 - 3,11)	1100	10,50	1,58	1,58	3,31	3,93		10,40 (3,40 - 14,40)	4,81	**4,40 A+**	2,16 (0,43 - 3,62)	1080	10,20
20+20+42+60	1,27	1,27	2,66	3,80		9,00 (3,00 - 11,00)	4,09	**8,00 A++**	2,20 (0,44 - 3,26)	1100	10,50	1,46	1,46	3,08	4,40		10,40 (3,40 - 14,40)	4,81	**4,40 A+**	2,16 (0,43 - 3,62)	1080	10,20
20+20+42+71	1,18	1,18	2,46	4,18		9,00 (3,00 - 11,00)	4,09	**8,00 A++**	2,20 (0,45 - 3,19)	1100	10,50	1,36	1,36	2,85	4,83		10,40 (3,40 - 14,40)	4,84	**4,40 A+**	2,15 (0,44 - 3,66)	1075	10,10
20+20+50+50	1,29	1,29	3,21	3,21		9,00 (2,90 - 10,80)	4,07	**8,00 A++**	2,21 (0,49 - 2,98)	1105	10,60	1,49	1,49	3,71	3,71		10,40 (3,40 - 14,40)	4,84	**4,40 A+**	2,15 (0,51 - 3,60)	1075	10,10
20+20+50+60	1,20	1,20	3,00	3,60		9,00 (3,00 - 11,00)	4,07	**8,00 A++**	2,21 (0,49 - 3,12)	1105	10,60	1,39	1,39	3,47	4,15		10,40 (3,40 - 14,40)	4,84	**4,40 A+**	2,15 (0,51 - 3,60)	1075	10,10
20+20+50+71	1,12	1,12	2,79	3,97		9,00 (3,00 - 11,20)	4,19	**8,00 A++**	2,15 (0,52 - 3,20)	1075	10,30	1,29	1,29	3,23	4,59		10,40 (3,40 - 14,40)	4,77	**4,40 A+**	2,18 (0,52 - 3,59)	1090	10,20
20+20+60+60	1,12	1,12	3,38	3,38		9,00 (3,00 - 11,20)	4,07	**8,00 A++**	2,21 (0,49 - 3,19)	1105	10,60	1,30	1,30	3,90	3,90		10,40 (3,40 - 14,40)	4,84	**4,40 A+**	2,15 (0,51 - 3,60)	1075	10,10
20+20+60+71	1,05	1,05	3,16	3,74		9,00 (3,00 - 11,20)	4,19	**8,00 A++**	2,15 (0,52 - 3,20)	1075	10,30	1,22	1,22	3,65	4,31		10,40 (3,40 - 14,40)	4,77	**4,40 A+**	2,18 (0,52 - 3,59)	1090	10,20
20+20+71+71	0,99	0,99	3,51	3,51		9,00 (3,00 - 11,20)	4,17	**8,00 A++**	2,16 (0,53 - 3,13)	1080	10,30	1,14	1,14	4,06	4,06		10,40 (3,40 - 14,40)	4,77	**4,40 A+**	2,18 (0,53 - 3,58)	1090	10,20
20+25+25+25	1,89	2,37	2,37	2,37		9,00 (2,90 - 10,60)	3,78	**8,00 A++**	2,38 (0,37 - 3,40)	1190	11,40	2,18	2,74	2,74	2,74		10,40 (3,40 - 14,20)	4,71	**4,40 A+**	2,21 (0,34 - 3,79)	1105	10,40
20+25+25+35	1,71	2,14	2,14	3,01		9,00 (2,90 - 10,60)	3,78	**8,00 A++**	2,38 (0,37 - 3,33)	1190	11,40	1,98	2,48	2,48	3,46		10,40 (3,40 - 14,20)	4,75	**4,40 A+**	2,19 (0,35 - 3,76)	1095	10,30
20+25+25+42	1,60	2,01	2,01	3,38		9,00 (2,90 - 10,60)	3,78	**8,00 A++**	2,38 (0,37 - 3,33)	1190	11,40	1,86	2,32	2,32	3,90		10,40 (3,40 - 14,20)	4,77	**4,40 A+**	2,18 (0,36 - 3,74)	1090	10,20
20+25+25+50	1,49	1,88	1,88	3,75		9,00 (2,90 - 10,60)	4,00	**8,00 A++**	2,25 (0,41 - 3,04)	1125	10,80	1,73	2,17	2,17	4,33		10,40 (3,40 - 14,20)	4,86	**4,40 A+**	2,14 (0,42 - 3,60)	1070	10,10
20+25+25+60	1,38	1,73	1,73	4,16		9,00 (2,90 - 10,80)	4,00	**8,00 A++**	2,25 (0,41 - 3,18)	1125	10,80	1,60	2,00	2,00	4,80		10,40 (3,40 - 14,40)	4,86	**4,40 A+**	2,14 (0,42 - 3,66)	1070	10,10
20+25+25+71	1,27	1,60	1,60	4,53		9,00 (2,90 - 10,80)	4,09	**8,00 A++**	2,20 (0,44 - 3,11)	1100	10,50	1,48	1,84	1,84	5,24		10,40 (3,40 - 14,40)	4,88	**4,40 A+**	2,13 (0,42 - 3,64)	1065	10,00
20+25+35+35	1,56	1,96	2,74	2,74		9,00 (2,90 - 10,60)	3,90	**8,00 A++**	2,31 (0,37 - 3,25)	1155	11,10	1,80	2,26	3,17	3,17		10,40 (3,40 - 14,20)	4,79	**4,40 A+**	2,17 (0,37 - 3,66)	1085	10,20
20+25+35+42	1,48	1,84	2,58	3,10		9,00 (2,90 - 10,80)	3,90	**8,00 A++**	2,31 (0,37 - 3,40)	1155	11,10	1,70	2,13	2,98	3,59		10,40 (3,40 - 14,20)	4,81	**4,40 A+**	2,16 (0,37 - 3,65)	1080	10,20
20+25+35+50	1,38	1,73	2,42	3,47		9,00 (2,90 - 10,80)	3,98	**8,00 A++**	2,26 (0,44 - 3,11)	1130	10,80	1,60	2,00	2,80	4,00		10,40 (3,40 - 14,40)	4,91	**4,40 A+**	2,12 (0,42 - 3,63)	1060	10,00
20+25+35+60	1,28	1,61	2,25	3,86		9,00 (2,90 - 10,80)	3,98	**8,00 A++**	2,26 (0,44 - 3,11)	1130	10,80	1,49	1,86	2,60	4,45		10,40 (3,40 - 14,40)	4,91	**4,40 A+**	2,12 (0,42 - 3,63)	1060	10,00
20+25+35+71	1,19	1,49	2,09	4,23		9,00 (3,00 - 11,00)	4,09	**8,00 A++**	2,20 (0,44 - 3,19)	1100	10,50	1,38	1,72	2,41	4,89		10,40 (3,40 - 14,40)	4,81	**4,40 A+**	2,16 (0,43 - 3,61)	1080	10,20
20+25+42+42	1,40	1,74	2,93	2,93		9,00 (2,90 - 10,80)	3,90	**8,00 A++**	2,31 (0,37 - 3,40)	1155	11,10	1,60	2,02	3,39	3,39		10,40 (3,40 - 14,40)	4,75	**4,40 A+**	2,19 (0,37 - 3,76)	1095	10,30
20+25+42+50	1,31	1,64	2,76	3,29		9,00 (2,90 - 10,80)	4,09	**8,00 A++**	2,20 (0,44 - 3,11)	1100	10,50	1,52	1,90	3,19	3,79		10,40 (3,40 - 14,40)	4,81	**4,40 A+**	2,16 (0,43 - 3,62)	1080	10,20
20+25+42+60	1,22	1,53	2,57	3,68		9,00 (3,00 - 11,00)	4,09	**8,00 A++**	2,20 (0,44 - 3,26)	1100	10,50	1,41	1,77	2,97	4,25		10,40 (3,40 - 14,40)	4,81	**4,40 A+**	2,16 (0,43 - 3,62)	1080	10,20
20+25+42+71	1,14	1,42	2,39	4,05		9,00 (3,00 - 11,20)	4,09	**8,00 A++**	2,20 (0,45 - 3,33)	1100	10,50	1,32	1,65	2,76	4,67		10,40 (3,40 - 14,40)	4,84	**4,40 A+**	2,15 (0,44 - 3,66)	1075	10,10
20+25+50+50	1,24	1,55	3,10	3,11		9,00 (3,00 - 11,00)	4,07	**8,00 A++**	2,21 (0,49 - 3,12)	1105	10,60	1,43	1,79	3,59	3,59		10,40 (3,40 - 14,40)	4,84	**4,40 A+**	2,15 (0,51 - 3,60)	1075	10,10
20+25+50+60	1,16	1,45	2,90	3,49		9,00 (3,00 - 11,00)	4,07	**8,00 A++**	2,21 (0,49 - 3,12)	1105	10,60	1,34	1,68	3,35	4,03		10,40 (3,40 - 14,40)	4,84	**4,40 A+**	2,15 (0,51 - 3,60)	1075	10,10
20+25+50+71	1,08	1,36	2,71	3,85		9,00 (3,00 - 11,20)	4,19	**8,00 A++**	2,15 (0,52 - 3,20)	1075	10,30	1,25	1,57	3,13	4,45		10,40 (3,40 - 14,40)	4,77	**4,40 A+**	2,18 (0,52 - 3,59)	1090	10,20
20+25+60+60	1,09	1,37	3,27	3,27		9,00 (3,00 - 11,20)	4,07	**8,00 A++**	2,21 (0,49 - 3,19)	1105	10,60	1,26	1,58	3,78	3,78		10,40 (3,40 - 14,40)	4,84	**4,40 A+**	2,15 (0,51 - 3,60)	1075	10,10
20+25+60+71	1,02	1,28	3,07	3,63		9,00 (3,00 - 11,20)	4,19	**8,00 A++**	2,15 (0,52 - 3,20)	1075	10,30	1,18	1,48	3,55	4,19		10,40 (3,40 - 14,40)	4,77	**4,40 A+**	2,18 (0,52 - 3,59)	1090	10,20
20+35+35+35	1,44	2,52	2,52	2,52		9,00 (2,90 - 10,80)	3,90	**8,00 A++**	2,31 (0,40 - 3,33)	1155	11,10	1,67	2,91	2,91	2,91		10,40 (3,40 - 14,40)	4,75	**4,40 A+**	2,19 (0,37 - 3,63)	1095	10,30
20+35+35+42	1,36	2,39	2,39	2,86		9,00 (2,90 - 10,80)	3,90	**8,00 A++**	2,31 (0,40 - 3,33)	1155	11,10	1,58	2,76	2,76	3,30		10,40 (3,40 - 14,40)	4,77	**4,40 A+**	2,18 (0,37 - 3,73)	1090	10,20
20+35+35+50	1,29	2,25	2,25	3,21		9,00 (2,90 - 10,80)	4,09	**8,00 A++**	2,20 (0,44 - 3,11)	1100	10,50	1,49	2,60	2,60	3,71		10,40 (3,40 - 14,40)	4,84	**4,40 A+**	2,15 (0,45 - 3,65)	1075	10,10
20+35+35+60	1,20	2,10	2,10	3,60		9,00 (3,00 - 11,00)	4,09	**8,00 A++**	2,20 (0,44 - 3,26)	1100	10,50	1,39	2,43	2,43	4,15		10,40 (3,40 - 14,40)	4,84	**4,40 A+**	2,15 (0,45 - 3,65)	1075	10,10

Free Multi 5x1 CU-5Z90TBE. Minimum capacity connected: 4,5 kW. Maximum capacity connected: 18,3 kW • R32 refrigerant

Indoor unit capacity	Cooling capacity (kW). Rooms						EER	SEER [1]	Input power rating	A.E.C.	Current	Heating capacity (kW). Rooms						COP	SCOP [1]	Input power rating	A.E.C.	Current
	A	B	C	D	E	Total (Min - Max)	W/W		kW	kWh	230V	A	B	C	D	E	Total (Min - Max)	W/W		kW	kWh	230V
20+35+35+71	1,11	1,96	1,96	3,97		9,00 (3,00 - 11,20)	4,09	**8,00 A++**	2,20 (0,47 - 3,33)	1100	10,50	1,29	2,26	2,26	4,59		10,40 (3,40 - 14,40)	4,86	**4,40 A+**	2,14 (0,45 - 3,64)	1070	10,10
20+35+42+42	1,29	2,27	2,72	2,72		9,00 (2,90 - 10,80)	3,90	**8,00 A++**	2,31 (0,40 - 3,33)	1155	11,10	1,50	2,62	3,14	3,14		10,40 (3,40 - 14,40)	4,79	**4,40 A+**	2,17 (0,39 - 3,72)	1085	10,20
20+35+42+50	1,22	2,14	2,57	3,07		9,00 (3,00 - 11,00)	4,09	**8,00 A++**	2,20 (0,44 - 3,19)	1100	10,50	1,41	2,48	2,97	3,54		10,40 (3,40 - 14,40)	4,84	**4,40 A+**	2,15 (0,45 - 3,64)	1075	10,10
20+35+42+60	1,14	2,01	2,41	3,44		9,00 (3,00 - 11,00)	4,09	**8,00 A++**	2,20 (0,44 - 3,19)	1100	10,50	1,32	2,32	2,78	3,98		10,40 (3,40 - 14,40)	4,84	**4,40 A+**	2,15 (0,45 - 3,64)	1075	10,10
20+35+42+71	1,07	1,88	2,25	3,80		9,00 (3,00 - 11,20)	4,09	**8,00 A++**	2,20 (0,48 - 3,34)	1100	10,50	1,24	2,17	2,60	4,39		10,40 (3,40 - 14,40)	4,86	**4,40 A+**	2,14 (0,46 - 3,63)	1070	10,10
20+35+50+50	1,16	2,04	2,90	2,90		9,00 (3,00 - 11,00)	4,07	**8,00 A++**	2,21 (0,52 - 3,05)	1105	10,60	1,34	2,36	3,35	3,35		10,40 (3,40 - 14,40)	4,77	**4,40 A+**	2,18 (0,53 - 3,58)	1090	10,20
20+35+50+60	1,09	1,91	2,73	3,27		9,00 (3,00 - 11,20)	4,07	**8,00 A++**	2,21 (0,52 - 3,20)	1105	10,60	1,26	2,21	3,15	3,78		10,40 (3,40 - 14,40)	4,77	**4,40 A+**	2,18 (0,53 - 3,58)	1090	10,20
20+35+50+71	1,02	1,79	2,56	3,63		9,00 (3,00 - 11,20)	4,17	**8,00 A++**	2,16 (0,53 - 3,20)	1080	10,30	1,18	2,07	2,95	4,20		10,40 (3,40 - 14,40)	4,79	**4,40 A+**	2,17 (0,54 - 3,56)	1085	10,20
20+35+60+60	1,02	1,80	3,09	3,09		9,00 (3,00 - 11,20)	4,07	**8,00 A++**	2,21 (0,52 - 3,20)	1105	10,60	1,19	2,07	3,57	3,57		10,40 (3,40 - 14,40)	4,77	**4,40 A+**	2,18 (0,53 - 3,58)	1090	10,20
20+42+42+42	1,23	2,59	2,59	2,59		9,00 (3,00 - 11,00)	3,90	**8,00 A++**	2,31 (0,40 - 3,40)	1155	11,10	1,43	2,99	2,99	2,99		10,40 (3,40 - 14,40)	4,79	**4,40 A+**	2,17 (0,39 - 3,71)	1085	10,20
20+42+42+50	1,17	2,45	2,45	2,93		9,00 (3,00 - 11,00)	4,09	**8,00 A++**	2,20 (0,45 - 3,19)	1100	10,50	1,35	2,84	2,84	3,37		10,40 (3,40 - 14,40)	4,86	**4,40 A+**	2,14 (0,45 - 3,63)	1070	10,10
20+42+42+60	1,10	2,30	2,30	3,30		9,00 (3,00 - 11,20)	4,09	**8,00 A++**	2,20 (0,45 - 3,33)	1100	10,50	1,27	2,66	2,66	3,81		10,40 (3,40 - 14,40)	4,86	**4,40 A+**	2,14 (0,45 - 3,63)	1070	10,10
20+42+42+71	1,03	2,16	2,16	3,65		9,00 (3,00 - 11,20)	4,09	**8,00 A++**	2,20 (0,48 - 3,26)	1100	10,50	1,19	2,50	2,50	4,21		10,40 (3,40 - 14,40)	4,88	**4,40 A+**	2,13 (0,46 - 3,61)	1065	10,00
20+42+50+50	1,11	2,33	2,78	2,78		9,00 (3,00 - 11,20)	4,19	**8,00 A++**	2,15 (0,52 - 3,20)	1075	10,30	1,28	2,70	3,21	3,21		10,40 (3,40 - 14,40)	4,79	**4,40 A+**	2,17 (0,54 - 3,57)	1085	10,20
20+42+50+60	1,04	2,20	2,62	3,14		9,00 (3,00 - 11,20)	4,19	**8,00 A++**	2,15 (0,52 - 3,20)	1075	10,30	1,21	2,54	3,02	3,63		10,40 (3,40 - 14,40)	4,79	**4,40 A+**	2,17 (0,54 - 3,57)	1085	10,20
20+42+50+71	0,98	2,07	2,46	3,49		9,00 (3,00 - 11,20)	4,17	**8,00 A++**	2,16 (0,53 - 3,13)	1080	10,30	1,14	2,39	2,84	4,03		10,40 (3,40 - 14,40)	4,79	**4,40 A+**	2,17 (0,55 - 3,55)	1085	10,20
20+42+60+60	0,98	2,08	2,97	2,97		9,00 (3,00 - 11,20)	4,19	**8,00 A++**	2,15 (0,52 - 3,20)	1075	10,30	1,14	2,40	3,43	3,43		10,40 (3,40 - 14,40)	4,79	**4,40 A+**	2,17 (0,54 - 3,57)	1085	10,20
20+50+50+50	1,05	2,65	2,65	2,65		9,00 (3,00 - 11,20)	4,15	**8,00 A++**	2,17 (0,58 - 3,14)	1085	10,40	1,22	3,06	3,06	3,06		10,40 (3,40 - 14,40)	4,60	**4,40 A+**	2,26 (0,63 - 3,57)	1130	10,60
20+50+50+60	1,00	2,50	2,50	3,00		9,00 (3,00 - 11,20)	4,15	**8,00 A++**	2,17 (0,58 - 3,14)	1085	10,40	1,16	2,89	2,89	3,46		10,40 (3,40 - 14,40)	4,60	**4,40 A+**	2,26 (0,63 - 3,57)	1130	10,60
25+25+25+25	2,25	2,25	2,25	2,25		9,00 (2,90 - 10,60)	3,78	**8,00 A++**	2,38 (0,37 - 3,40)	1190	11,40	2,60	2,60	2,60	2,60		10,40 (3,40 - 14,20)	4,71	**4,40 A+**	2,21 (0,34 - 3,79)	1105	10,40
25+25+25+35	2,05	2,05	2,05	2,85		9,00 (2,90 - 10,60)	3,78	**8,00 A++**	2,38 (0,37 - 3,33)	1190	11,40	2,36	2,36	2,36	3,32		10,40 (3,40 - 14,20)	4,75	**4,40 A+**	2,19 (0,35 - 3,76)	1095	10,30
25+25+25+42	1,92	1,92	1,92	3,24		9,00 (2,90 - 10,60)	3,78	**8,00 A++**	2,38 (0,37 - 3,33)	1190	11,40	2,22	2,22	2,22	3,74		10,40 (3,40 - 14,20)	4,77	**4,40 A+**	2,18 (0,36 - 3,74)	1090	10,20
25+25+25+50	1,80	1,80	1,80	3,60		9,00 (2,90 - 10,80)	4,00	**8,00 A++**	2,25 (0,41 - 3,18)	1125	10,80	2,08	2,08	2,08	4,16		10,40 (3,40 - 14,20)	4,86	**4,40 A+**	2,14 (0,42 - 3,60)	1070	10,10
25+25+25+60	1,67	1,67	1,67	3,99		9,00 (2,90 - 10,80)	4,00	**8,00 A++**	2,25 (0,41 - 3,18)	1125	10,80	1,93	1,93	1,93	4,61		10,40 (3,40 - 14,40)	4,86	**4,40 A+**	2,14 (0,42 - 3,66)	1070	10,10
25+25+25+71	1,54	1,54	1,54	4,38		9,00 (3,00 - 11,00)	4,09	**8,00 A++**	2,20 (0,44 - 3,26)	1100	10,50	1,78	1,78	1,78	5,06		10,40 (3,40 - 14,40)	4,88	**4,40 A+**	2,13 (0,42 - 3,64)	1065	10,00
25+25+35+35	1,87	1,87	2,63	2,63		9,00 (2,90 - 10,60)	3,90	**8,00 A++**	2,31 (0,37 - 3,25)	1155	11,10	2,17	2,17	3,03	3,03		10,40 (3,40 - 14,20)	4,79	**4,40 A+**	2,17 (0,37 - 3,66)	1085	10,20
25+25+35+42	1,77	1,77	2,48	2,98		9,00 (2,90 - 10,80)	3,90	**8,00 A++**	2,31 (0,37 - 3,40)	1155	11,10	2,05	2,05	2,87	3,43		10,40 (3,40 - 14,20)	4,81	**4,40 A+**	2,16 (0,37 - 3,65)	1080	10,20
25+25+35+50	1,67	1,67	2,33	3,33		9,00 (2,90 - 10,80)	3,98	**8,00 A++**	2,26 (0,44 - 3,11)	1130	10,80	1,93	1,93	2,70	3,84		10,40 (3,40 - 14,40)	4,91	**4,40 A+**	2,12 (0,42 - 3,63)	1060	10,00
25+25+35+60	1,55	1,55	2,17	3,73		9,00 (3,00 - 11,00)	3,98	**8,00 A++**	2,26 (0,44 - 3,26)	1130	10,80	1,79	1,79	2,51	4,31		10,40 (3,40 - 14,40)	4,91	**4,40 A+**	2,12 (0,42 - 3,63)	1060	10,00
25+25+35+71	1,44	1,44	2,02	4,10		9,00 (3,00 - 11,00)	4,09	**8,00 A++**	2,20 (0,44 - 3,19)	1100	10,50	1,67	1,67	2,33	4,73		10,40 (3,40 - 14,40)	4,81	**4,40 A+**	2,16 (0,43 - 3,61)	1080	10,20
25+25+42+42	1,68	1,68	2,82	2,82		9,00 (2,90 - 10,80)	3,90	**8,00 A++**	2,31 (0,37 - 3,40)	1155	11,10	1,94	1,94	3,26	3,26		10,40 (3,40 - 14,40)	4,75	**4,40 A+**	2,19 (0,37 - 3,76)	1095	10,30
25+25+42+50	1,58	1,58	2,66	3,18		9,00 (3,00 - 11,00)	4,09	**8,00 A++**	2,20 (0,44 - 3,26)	1100	10,50	1,83	1,83	3,08	3,66		10,40 (3,40 - 14,40)	4,81	**4,40 A+**	2,16 (0,43 - 3,62)	1080	10,20
25+25+42+60	1,48	1,48	2,49	3,55		9,00 (3,00 - 11,00)	4,09	**8,00 A++**	2,20 (0,44 - 3,26)	1100	10,50	1,71	1,71	2,87	4,11		10,40 (3,40 - 14,40)	4,81	**4,40 A+**	2,16 (0,43 - 3,62)	1080	10,20
25+25+42+71	1,38	1,38	2,32	3,92		9,00 (3,00 - 11,20)	4,09	**8,00 A++**	2,20 (0,45 - 3,33)	1100	10,50	1,60	1,60	2,68	4,52		10,40 (3,40 - 14,40)	4,84	**4,40 A+**	2,15 (0,44 - 3,66)	1075	10,10
25+25+50+50	1,50	1,50	3,00	3,00		9,00 (3,00 - 11,00)	4,07	**8,00 A++**	2,21 (0,49 - 3,12)	1105	10,60	1,73	1,73	3,47	3,47		10,40 (3,40 - 14,40)	4,84	**4,40 A+**	2,15 (0,51 - 3,60)	1075	10,10
25+25+50+60	1,41	1,41	2,80	3,38		9,00 (3,00 - 11,20)	4,07	**8,00 A++**	2,21 (0,49 - 3,19)	1105	10,60	1,63	1,63	3,25	3,89		10,40 (3,40 - 14,40)	4,84	**4,40 A+**	2,15 (0,51 - 3,60)	1075	10,10
25+25+50+71	1,32	1,32	2,62	3,74		9,00 (3,00 - 11,20)	4,19	**8,00 A++**	2,15 (0,52 - 3,20)	1075	10,30	1,52	1,52	3,04	4,32		10,40 (3,40 - 14,40)	4,77	**4,40 A+**	2,18 (0,52 - 3,59)	1090	10,20
25+25+60+60	1,32	1,32	3,18	3,18		9,00 (3,00 - 11,20)	4,07	**8,00 A++**	2,21 (0,49 - 3,19)	1105	10,60	1,53	1,53	3,67	3,67		10,40 (3,40 - 14,40)	4,84	**4,40 A+**	2,15 (0,51 - 3,60)	1075	10,10
25+25+60+71	1,24	1,24	2,98	3,54		9,00 (3,00 - 11,20)	4,19	**8,00 A++**	2,15 (0,52 - 3,20)	1075	10,30	1,44	1,44	3,45	4,07		10,40 (3,40 - 14,40)	4,77	**4,40 A+**	2,18 (0,52 - 3,59)	1090	10,20
25+35+35+35	1,74	2,42	2,42	2,42		9,00 (2,90 - 10,80)	3,90	**8,00 A++**	2,31 (0,40 - 3,33)	1155	11,10	2,00	2,80	2,80	2,80		10,40 (3,40 - 14,40)	4,75	**4,40 A+**	2,19 (0,37 - 3,75)	1095	10,30
25+35+35+42	1,64	2,30	2,30	2,76		9,00 (2,90 - 10,80)	3,90	**8,00 A++**	2,31 (0,40 - 3,33)	1155	11,10	1,90	2,66	2,66	3,18		10,40 (3,40 - 14,40)	4,77	**4,40 A+**	2,18 (0,37 - 3,73)	1090	10,20
25+35+35+50	1,55	2,17	2,17	3,11		9,00 (3,00 - 11,00)	4,09	**8,00 A++**	2,20 (0,44 - 3,26)	1100	10,50	1,79	2,51	2,51	3,59		10,40 (3,40 - 14,40)	4,84	**4,40 A+**	2,15 (0,45 - 3,65)	1075	10,10
25+35+35+60	1,45	2,03	2,03	3,49		9,00 (3,00 - 11,00)	4,09	**8,00 A++**	2,20 (0,44 - 3,26)	1100	10,50	1,68	2,35	2,35	4,02		10,40 (3,40 - 14,40)	4,84	**4,40 A+**	2,15 (0,45 - 3,65)	1075	10,10
25+35+35+71	1,35	1,90	1,90	3,85		9,00 (3,00 - 11,20)	4,09	**8,00 A++**	2,20 (0,47 - 3,33)	1100	10,50	1,57	2,19	2,19	4,45		10,40 (3,40 - 14,40)	4,86	**4,40 A+**	2,14 (0,45 - 3,64)	1070	10,10
25+35+42+42	1,55	2,19	2,63	2,63		9,00 (3,00 - 11,00)	3,90	**8,00 A++**	2,31 (0,40 - 3,48)	1155	11,10	1,81	2,53	3,03	3,03		10,40 (3,40 - 14,40)	4,79	**4,40 A+**	2,17 (0,39 - 3,72)	1085	10,20
25+35+42+50	1,48	2,07	2,49	2,96		9,00 (3,00 - 11,00)	4,09	**8,00 A++**	2,20 (0,44 - 3,19)	1100	10,50	1,71	2,39	2,87	3,43		10,40 (3,40 - 14,40)	4,84	**4,40 A+**	2,15 (0,45 - 3,64)	1075	10,10
25+35+42+60	1,39	1,95	2,33	3,33		9,00 (3,00 - 11,20)	4,09	**8,00 A++**	2,20 (0,44 - 3,33)	1100	10,50	1,60	2,25	2,70	3,85		10,40 (3,40 - 14,40)	4,84	**4,40 A+**	2,15 (0,45 - 3,64)	1075	10,10
25+35+42+71	1,30	1,82	2,18	3,70		9,00 (3,00 - 11,20)	4,09	**8,00 A++**	2,20 (0,48 - 3,34)	1100	10,50	1,50	2,10	2,52	4,28		10,40 (3,40 - 14,40)	4,86	**4,40 A+**	2,14 (0,46 - 3,63)	1070	10,10
25+35+50+50	1,41	1,97	2,81	2,81		9,00 (3,00 - 11,20)	4,07	**8,00 A++**	2,21 (0,52 - 3,20)	1105	10,60	1,62	2,28	3,25	3,25		10,40 (3,40 - 14,40)	4,77	**4,40 A+**	2,18 (0,53 - 3,58)	1090	10,20
25+35+50+60	1,32	1,85	2,65	3,18		9,00 (3,00 - 11,20)	4,07	**8,00 A++**	2,21 (0,52 - 3,20)	1105	10,60	1,53	2,14	3,06	3,67		10,40 (3,40 - 14,40)	4,77	**4,40 A+**	2,18 (0,53 - 3,58)	1090	10,20
25+35+50+71	1,24	1,74	2,49	3,53		9,00 (3,00 - 11,20)	4,17	**8,00 A++**	2,16 (0,53 - 3,20)	1080	10,30	1,44	2,01	2,87	4,08		10,40 (3,40 - 14,40)	4,79	**4,40 A+**	2,17 (0,54 - 3,56)	1085	10,20
25+35+60+60	1,25	1,75	3,00	3,00		9,00 (3,00 - 11,20)	4,07	**8,00 A++**	2,21 (0,52 - 3,20)	1105	10,60	1,44	2,02	3,47	3,47		10,40 (3,40 - 14,40)	4,77	**4,40 A+**	2,18 (0,53 - 3,58)	1090	10,20
25+42+42+42	1,50	2,50	2,50	2,50		9,00 (3,00 - 11,00)	3,90	**8,00 A++**	2,31 (0,40 - 3,40)	1155	11,10	1,73	2,89	2,89	2,89		10,40 (3,40 - 14,40)	4,79	**4,40 A+**	2,17 (0,39 - 3,71)	1085	10,20
25+42+42+50	1,41	2,38	2,38	2,83		9,00 (3,00 - 11,20)	4,09	**8,00 A++**	2,20 (0,45 - 3,33)	1100	10,50	1,64	2,75	2,75	3,26		10,40 (3,40 - 14,40)	4,86	**4,40 A+**	2,14 (0,45 - 3,63)	1070	10,10
25+42+42+60	1,32	2,24	2,24	3,20		9,00 (3,00 - 11,20)	4,09	**8,00 A++**	2,20 (0,45 - 3,33)	1100	10,50	1,54	2,58	2,58	3,70		10,40 (3,40 - 14,40)	4,86	**4,40 A+**	2,14 (0,45 - 3,63)	1070	10,10
25+42+42+71	1,25	2,10	2,10	3,55		9,00 (3,00 - 11,20)	4,09	**8,00 A++**	2,20 (0,48 - 3,26)	1100	10,50	1,44	2,43	2,43	4,10		10,40 (3,40 - 14,40)	4,88	**4,40 A+**	2,13 (0,46 - 3,61)	1065	10,00
25+42+50+50	1,35	2,27	2,69	2,69		9,00 (3,00 - 11,20)	4,19	**8,00 A++**	2,15 (0,52 - 3,20)	1075	10,30	1,56	2,62	3,11	3,11		10,40 (3,40 - 14,40)	4,79	**4,40 A+**	2,17 (0,54 - 3,57)	1085	10,20
25+42+50+60	1,27	2,14	2,54	3,05		9,00 (3,00 - 11,20)	4,19	**8,00 A++**	2,15 (0,52 - 3,20)	1075	10,30	1,47	2,47	2,94	3,52		10,40 (3,40 - 14,40)	4,79	**4,40 A+**	2,17 (0,54 - 3,57)	1085	10,20
25+50+50+50	1,29	2,57	2,57	2,57		9,00 (3,00 - 11,20)	4,15	**8,00 A++**	2,17 (0,58 - 3,14)	1085	10,40	1,49	2,97	2,97	2,97		10,40 (3,40 - 14,40)	4,60	**4,40 A+**	2,26 (0,63 - 3,57)	1130	10,60
35+35+35+35	2,25	2,25	2,25	2,25		9,00 (2,90 - 10,80)	4,00	**8,00 A++**	2,25 (0,40 - 3,25)	1125	10,80	2,60	2,60	2,60	2,60		10,40 (3,40 - 14,40)	4,79	**4,40 A+**	2,17 (0,39 - 3,71)	1085	10,20
35+35+35+42	2,14	2,14	2,14	2,58		9,00 (3,00 - 11,00)	4,00	**8,00 A++**	2,25 (0,41 - 3,40)	1125	10,80	2,48	2,48	2,48	2,96		10,40 (3,40 - 14,40)	4,81	**4,40 A+**	2,16 (0,39 - 3,70)	1080	10,20
35+35+35+50	2,03	2,03	2,03	2,91		9,00 (3,00 - 11,00)	4,09	**8,00 A++**	2,20 (0,47 - 3,19)	1100	10,50	2,35	2,35	2,35	3,35		10,40 (3,40 - 14,40)	4,86	**4,40 A+**	2,14 (0,46 - 3,62)	1070	10,10
35+35+35+60	1,91	1,91	1,91	3,27		9,00 (3,00 - 11,20)	4,09	**8,00 A++**	2,20 (0,47 - 3,33)	1100	10,50	2,21	2,21	2,21	3,77		10,40 (3,40 - 14,40)	4,86	**4,40 A+**	2,14 (0,46 - 3,62)	1070	10,10
35+35+35+71	1,79	1,79	1,79	3,63		9,00 (3,00 - 11,20)	4,09	**8,00 A++**	2,20 (0,48 - 3,26)	1100	10,50	2,07	2,07	2,07	4,19		10,40 (3,40 - 14,40)	4,88	**4,40 A+**	2,13 (0,47 - 3,61)	1065	10,00
35+35+42+42	2,05	2,05	2,45	2,45		9,00 (3,00 - 11,00)	4,00	**8,00 A++**	2,25 (0,41 - 3,40)	1125	10,80	2,36	2,36	2,84	2,84		10,40 (3,40 - 14,40)	4,81	**4,40 A+**	2,16 (0,40 - 3,69)	1080	10,20
35+35+42+50	1,94	1,94	2,33	2,79		9,00 (3,00 - 11,20)	4,09	**8,00 A++**	2,20 (0,47 - 3,33)	1100	10,50	2,25	2,25	2,70	3,20		10,40 (3,40 - 14,40)	4,88	**4,40 A+**	2,13 (0,47 - 3,61)	1065	10,00
35+35+42+60	1,83	1,83	2,20	3,14		9,00 (3,00 - 11,20)	4,09	**8,00 A++**	2,20 (0,47 - 3,33)	1100	10,50	2,12	2,12	2,54	3,62		10,40 (3,40 - 14,40)	4,88	**4,40 A+**	2,13 (0,47 - 3,61)	1065	10,00
35+35+42+71	1,72	1,72	2,07	3,49		9,00 (3,00 - 11,20)	4,09	**8,00 A++**	2,20 (0,48 - 3,26)	1100	10,50	1,99	1,99	2,39	4,03		10,40 (3,40 - 14,40)	4,79	**4,40 A+**	2,17 (0,48 - 3,60)	1085	10,20
35+35+50+50	1,85	1,85	2,65	2,65		9,00 (3,00 - 11,20)	4,17	**8,00 A++**	2,16 (0,52 - 3,20)	1080	10,30	2,14	2,14	3,06	3,06		10,40 (3,40 - 14,40)	4,79	**4,40 A+**	2,17 (0,55 - 3,55)	1085	10,20
35+35+50+60	1,75	1,75	2,50	3,00		9,00 (3,00 - 11,20)	4,17	**8,00 A++**	2,16 (0,52 - 3,20)	1080	10,30	2,02	2,02	2,89	3,47		10,40 (3,40 - 14,40)	4,79	**4,40 A+**	2,17 (0,55 - 3,55)	1085	10,20
35+42+42+42	1,95	2,35	2,35	2,35		9,00 (3,00 - 11,20)	4,00	**8,00 A++**	2,25 (0,41 - 3,56)	1125	10,80	2,27	2,71	2,71	2,71		10,40 (3,40 - 14,40)	4,84	**4,40 A+**	2,15 (0,40 - 3,67)	1075	10,10
35+42+42+50	1,86	2,24	2,24	2,66		9,00 (3,00 - 11,20)	4,09	**8,00 A++**	2,20 (0,48 - 3,34)	1100	10,50	2,15	2,58	2,58	3,09		10,40 (3,40 - 14,40)	4,79	**4,40 A+**	2,17 (0,48 - 3,60)	1085	10,20
35+42+42+60	1,76	2,11	2,11	3,02		9,00 (3,00 - 11,20)	4,09	**8,00 A++**	2,20 (0,48 - 3,34)	1100	10,50	2,03	2,44	2,44	3,49		10,40 (3,40 - 14,40)	4,79	**4,40 A+**	2,17 (0,48 - 3,60)	1085	10,20
35+42+50+50	1,78	2,14	2,54	2,54		9,00 (3,00 - 11,20)	4,17	**8,00 A++**	2,16 (0,53 - 3,20)	1080	10,30	2,05	2,47	2,94	2,94		10,40 (3,40 - 14,40)	4,73	**4,40 A+**	2,20 (0,56 - 3,54)	1100	10,30
42+42+42+42	2,25	2,25	2,25	2,25		9,00 (3,00 - 11,20)	4,00	**8,00 A++**	2,25 (0,43 - 3,48)	1125	10,80	2,60	2,60	2,60	2,60		10,40 (3,40 - 14,40)	4,86	**4,40 A+**	2,14 (0,40 - 3,66)	1070	10,10
42+42+42+50	2,15	2,15	2,15	2,55		9,00 (3,00 - 11,20)	4,09	**8,00 A++**	2,20 (0,48 - 3,26)	1100	10,50	2,48	2,48	2,48	2,96		10,40 (3,40 - 14,40)	4,81	**4,40 A+**	2,16 (0,48 - 3,59)	1080	10,20
5 Rooms																						
16+16+16+16+16	1,60	1,60	1,60	1,60	1,60	8,00 (2,90 - 11,50)	4,28	**8,50 A+++**	1,87 (0,45 - 3,56)	935	9,00	2,08	2,08	2,08	2,08	2,08	10,40 (3,40 - 14,50)	4,81	**4,40 A+**	2,16 (0,43 - 3,67)	1080	10,20
16+16+16+16+20	1,60	1,60	1,60	1,60	2,00	8,40 (2,90 - 11,50)	4,24	**8,50 A+++**	1,98 (0,45 - 3,56)	990	9,50	1,98	1,98	1,98	1,98	2,48	10,40 (3,40 - 14,50)	4,84	**4,50 A+**	2,15 (0,44 - 3,66)	1075	10,10
16+16+16+16+25	1,62	1,62	1,62	1,62	2,52	9,00 (2,90 - 11,50)	4,09	**8,50 A+++**	2,20 (0,45 - 3,56)	1100	10,50	1,87	1,87	1,87	1,87	2,92	10,40 (3,40 - 14,50)	4,84	**4,68 A++**	2,15 (0,44 - 3,66)	1075	10,10
16+16+16+16+35	1,45	1,45	1,45	1,45	3,20	9,00 (2,90 - 11,50)	4,09	**8,50 A+++**	2,20 (0,45 - 3,49)	1100	10,50	1,68	1,68	1,68	1,68	3,68	10,40 (3,40 - 14,50)	4,86	**4,68 A++**	2,14 (0,45 - 3,63)	1070	10,10

Rating Conditions: Cooling Indoor 27°C DB / 19°C WB. Cooling Outdoor 35°C DB / 24°C WB. Heating Indoor 20°C DB. Heating Outdoor 7°C DB / 6°C WB. (DB: Dry Bulb; WB: Wet Bulb).
Specifications subject to change without notice. For detailed information about ErP / Energy Labelling, please visit our websites www.aircon.panasonic.eu or www.ptc.panasonic.eu.

Free Multi R32 combinations table

Free Multi 5x1 CU-5Z90TBE. Minimum capacity connected: 4,5 kW. Maximum capacity connected: 18,3 kW • R32 refrigerant

Indoor unit capacity	Cooling capacity (kW). Rooms						EER	SEER [1]	Input power rating	A.E.C.	Current	Heating capacity (kW). Rooms						COP	SCOP [1]	Input power rating	A.E.C.	Current
	A	B	C	D	E	Total (Min - Max)	W/W		kW	kWh	230V	A	B	C	D	E	Total (Min - Max)	W/W		kW	kWh	230V
16+16+16+16+42	1,36	1,36	1,36	1,36	3,56	9,00 (2,90 - 11,50)	4,09	**8,50 A+++**	2,20 (0,45 - 3,49)	1100	10,50	1,57	1,57	1,57	1,57	4,12	10,40 (3,40 - 14,50)	4,86	**4,68 A++**	2,14 (0,46 - 3,67)	1070	10,10
16+16+16+16+50	1,26	1,26	1,26	1,26	3,96	9,00 (2,90 - 11,50)	4,17	**8,50 A+++**	2,16 (0,53 - 3,35)	1080	10,30	1,46	1,46	1,46	1,46	4,56	10,40 (3,40 - 14,50)	4,79	**4,68 A++**	2,17 (0,54 - 3,61)	1085	10,20
16+16+16+16+60	1,16	1,16	1,16	1,16	4,36	9,00 (2,90 - 11,50)	4,17	**8,50 A+++**	2,16 (0,53 - 3,35)	1080	10,30	1,34	1,34	1,34	1,34	5,04	10,40 (3,40 - 14,50)	4,79	**4,68 A++**	2,17 (0,54 - 3,61)	1085	10,20
16+16+16+16+71	1,07	1,07	1,07	1,07	4,72	9,00 (2,90 - 11,50)	4,17	**8,50 A+++**	2,16 (0,54 - 3,28)	1080	10,30	1,23	1,23	1,23	1,23	5,48	10,40 (3,40 - 14,50)	4,71	**4,68 A++**	2,21 (0,56 - 3,60)	1105	10,40
16+16+16+20+20	1,60	1,60	1,60	2,00	2,00	8,80 (2,90 - 11,50)	4,11	**8,50 A+++**	2,14 (0,45 - 3,48)	1070	10,20	1,89	1,89	1,89	2,36	2,36	10,39 (3,40 - 14,50)	4,83	**4,60 A++**	2,15 (0,45 - 3,65)	1075	10,10
16+16+16+20+25	1,55	1,55	1,55	1,94	2,41	9,00 (2,90 - 11,50)	4,09	**8,50 A+++**	2,20 (0,45 - 3,48)	1100	10,50	1,79	1,79	1,79	2,24	2,79	10,40 (3,40 - 14,50)	4,84	**4,68 A++**	2,15 (0,45 - 3,65)	1075	10,10
16+16+16+20+35	1,40	1,40	1,40	1,75	3,05	9,00 (2,90 - 11,50)	4,09	**8,50 A+++**	2,20 (0,45 - 3,49)	1100	10,50	1,62	1,62	1,62	2,02	3,52	10,40 (3,40 - 14,50)	4,86	**4,68 A++**	2,14 (0,46 - 3,67)	1070	10,10
16+16+16+20+42	1,31	1,31	1,31	1,64	3,43	9,00 (2,90 - 11,50)	4,09	**8,50 A+++**	2,20 (0,48 - 3,49)	1100	10,50	1,51	1,51	1,51	1,89	3,98	10,40 (3,40 - 14,50)	4,88	**4,68 A++**	2,13 (0,47 - 3,66)	1065	10,00
16+16+16+20+50	1,22	1,22	1,22	1,53	3,81	9,00 (2,90 - 11,50)	4,17	**8,50 A+++**	2,16 (0,53 - 3,35)	1080	10,30	1,41	1,41	1,41	1,76	4,41	10,40 (3,40 - 14,50)	4,79	**4,68 A++**	2,17 (0,56 - 3,60)	1085	10,20
16+16+16+20+60	1,13	1,13	1,13	1,41	4,20	9,00 (2,90 - 11,50)	4,17	**8,50 A+++**	2,16 (0,53 - 3,35)	1080	10,30	1,30	1,30	1,30	1,63	4,87	10,40 (3,40 - 14,50)	4,79	**4,68 A++**	2,17 (0,56 - 3,60)	1085	10,20
16+16+16+20+71	1,04	1,04	1,04	1,29	4,59	9,00 (2,90 - 11,50)	4,15	**8,50 A+++**	2,17 (0,54 - 3,28)	1085	10,40	1,20	1,20	1,20	1,50	5,30	10,40 (3,40 - 14,50)	4,73	**4,68 A++**	2,20 (0,57 - 3,59)	1100	10,30
16+16+16+25+25	1,47	1,47	1,47	2,29	2,29	8,99 (2,90 - 11,50)	4,09	**8,50 A+++**	2,20 (0,45 - 3,48)	1100	10,50	1,70	1,70	1,70	2,65	2,65	10,40 (3,40 - 14,50)	4,84	**4,68 A++**	2,15 (0,45 - 3,65)	1075	10,10
16+16+16+25+35	1,33	1,33	1,33	2,08	2,93	9,00 (2,90 - 11,50)	4,09	**8,50 A+++**	2,20 (0,45 - 3,49)	1100	10,50	1,54	1,54	1,54	2,41	3,37	10,40 (3,40 - 14,50)	4,86	**4,68 A++**	2,14 (0,46 - 3,67)	1070	10,10
16+16+16+25+42	1,25	1,25	1,25	1,96	3,29	9,00 (2,90 - 11,50)	4,09	**8,50 A+++**	2,20 (0,48 - 3,49)	1100	10,50	1,45	1,45	1,45	2,26	3,79	10,40 (3,40 - 14,50)	4,88	**4,68 A++**	2,13 (0,47 - 3,66)	1065	10,00
16+16+16+25+50	1,17	1,17	1,17	1,83	3,66	9,00 (2,90 - 11,50)	4,17	**8,50 A+++**	2,16 (0,53 - 3,35)	1080	10,30	1,35	1,35	1,35	2,11	4,24	10,40 (3,40 - 14,50)	4,79	**4,68 A++**	2,17 (0,56 - 3,60)	1085	10,20
16+16+16+25+60	1,08	1,08	1,08	1,69	4,07	9,00 (2,90 - 11,50)	4,17	**8,50 A+++**	2,16 (0,53 - 3,35)	1080	10,30	1,25	1,25	1,25	1,95	4,70	10,40 (3,40 - 14,50)	4,79	**4,68 A++**	2,17 (0,56 - 3,60)	1085	10,20
16+16+16+25+71	1,00	1,00	1,00	1,56	4,44	9,00 (2,90 - 11,50)	4,15	**8,50 A+++**	2,17 (0,54 - 3,28)	1085	10,40	1,16	1,16	1,16	1,81	5,11	10,40 (3,40 - 14,50)	4,73	**4,68 A++**	2,20 (0,57 - 3,59)	1100	10,30
16+16+16+35+35	1,22	1,22	1,22	2,67	2,67	9,00 (2,90 - 11,50)	4,07	**8,50 A+++**	2,21 (0,48 - 3,41)	1105	10,60	1,41	1,41	1,41	3,08	3,08	10,39 (3,40 - 14,50)	4,81	**4,68 A++**	2,16 (0,48 - 3,64)	1080	10,20
16+16+16+35+42	1,15	1,15	1,15	2,52	3,03	9,00 (2,90 - 11,50)	4,07	**8,50 A+++**	2,21 (0,48 - 3,41)	1105	10,60	1,33	1,33	1,33	2,91	3,50	10,40 (3,40 - 14,50)	4,81	**4,68 A++**	2,16 (0,49 - 3,63)	1080	10,20
16+16+16+35+50	1,08	1,08	1,08	2,37	3,39	9,00 (2,90 - 11,50)	4,15	**8,50 A+++**	2,17 (0,54 - 3,28)	1085	10,40	1,25	1,25	1,25	2,74	3,91	10,40 (3,40 - 14,50)	4,73	**4,68 A++**	2,20 (0,57 - 3,63)	1100	10,30
16+16+16+35+60	1,01	1,01	1,01	2,20	3,77	9,00 (2,90 - 11,50)	4,15	**8,50 A+++**	2,17 (0,54 - 3,28)	1085	10,40	1,16	1,16	1,16	2,55	4,37	10,40 (3,40 - 14,50)	4,73	**4,68 A++**	2,20 (0,57 - 3,63)	1100	10,30
16+16+16+35+71	0,94	0,94	0,94	2,05	4,13	9,00 (2,90 - 11,50)	4,15	**8,50 A+++**	2,17 (0,57 - 3,28)	1085	10,40	1,08	1,08	1,08	2,36	4,80	10,40 (3,40 - 14,50)	4,73	**4,68 A++**	2,20 (0,59 - 3,62)	1100	10,30
16+16+16+42+42	1,09	1,09	1,09	2,86	2,86	8,99 (2,90 - 11,50)	4,07	**8,50 A+++**	2,21 (0,49 - 3,41)	1105	10,60	1,26	1,26	1,26	3,31	3,31	10,40 (3,40 - 14,50)	4,84	**4,68 A++**	2,15 (0,50 - 3,62)	1075	10,10
16+16+16+42+50	1,03	1,03	1,03	2,70	3,21	9,00 (2,90 - 11,50)	4,15	**8,50 A+++**	2,17 (0,54 - 3,28)	1085	10,40	1,19	1,19	1,19	3,12	3,71	10,40 (3,40 - 14,50)	4,73	**4,68 A++**	2,20 (0,59 - 3,62)	1100	10,30
16+16+16+42+60	0,96	0,96	0,96	2,52	3,60	9,00 (2,90 - 11,50)	4,15	**8,50 A+++**	2,17 (0,54 - 3,28)	1085	10,40	1,11	1,11	1,11	2,91	4,16	10,40 (3,40 - 14,50)	4,73	**4,68 A++**	2,20 (0,59 - 3,62)	1100	10,30
16+16+16+42+71	0,89	0,89	0,89	2,35	3,98	9,00 (2,90 - 11,50)	4,15	**8,50 A+++**	2,17 (0,57 - 3,29)	1085	10,40	1,03	1,03	1,03	2,71	4,60	10,40 (3,40 - 14,50)	4,66	**4,68 A++**	2,23 (0,60 - 3,61)	1115	10,50
16+16+16+50+50	0,97	0,97	0,97	3,04	3,05	9,00 (2,90 - 11,50)	4,11	**8,50 A+++**	2,19 (0,62 - 3,23)	1095	10,50	1,12	1,12	1,12	3,52	3,52	10,40 (3,40 - 14,50)	4,54	**4,68 A++**	2,29 (0,69 - 3,63)	1145	10,80
16+16+16+50+60	0,91	0,91	0,91	2,85	3,42	9,00 (2,90 - 11,50)	4,11	**8,50 A+++**	2,19 (0,62 - 3,23)	1095	10,50	1,05	1,05	1,05	3,29	3,96	10,40 (3,40 - 14,50)	4,54	**4,68 A++**	2,29 (0,69 - 3,63)	1145	10,80
16+16+16+50+71	0,85	0,85	0,85	2,66	3,79	9,00 (2,90 - 11,50)	3,98	**8,50 A+++**	2,26 (0,66 - 3,24)	1130	10,80	0,98	0,98	0,98	3,08	4,38	10,40 (3,40 - 14,50)	4,54	**4,68 A++**	2,29 (0,71 - 3,62)	1145	10,80
16+16+16+60+60	0,86	0,86	0,86	3,21	3,21	9,00 (2,90 - 11,50)	4,11	**8,50 A+++**	2,19 (0,62 - 3,23)	1095	10,50	0,99	0,99	0,99	3,71	3,71	10,39 (3,40 - 14,50)	4,54	**4,68 A++**	2,29 (0,69 - 3,63)	1145	10,80
16+16+16+60+71	0,80	0,80	0,80	3,02	3,58	9,00 (2,90 - 11,50)	3,98	**8,50 A+++**	2,26 (0,66 - 3,24)	1130	10,80	0,93	0,93	0,93	3,49	4,12	10,40 (3,40 - 14,50)	4,54	**4,68 A++**	2,29 (0,71 - 3,62)	1145	10,80
16+16+20+20+20	1,56	1,56	1,96	1,96	1,96	9,00 (2,90 - 11,50)	4,09	**8,50 A+++**	2,20 (0,45 - 3,49)	1100	10,50	1,81	1,81	2,26	2,26	2,26	10,40 (3,40 - 14,50)	4,86	**4,68 A++**	2,14 (0,45 - 3,64)	1070	10,10
16+16+20+20+25	1,48	1,48	1,86	1,86	2,32	9,00 (2,90 - 11,50)	4,09	**8,50 A+++**	2,20 (0,45 - 3,49)	1100	10,50	1,72	1,72	2,14	2,14	2,68	10,40 (3,40 - 14,50)	4,86	**4,68 A++**	2,14 (0,45 - 3,64)	1070	10,10
16+16+20+20+35	1,35	1,35	1,68	1,68	2,94	9,00 (2,90 - 11,50)	4,09	**8,50 A+++**	2,20 (0,48 - 3,49)	1100	10,50	1,56	1,56	1,94	1,94	3,40	10,40 (3,40 - 14,50)	4,88	**4,68 A++**	2,13 (0,47 - 3,66)	1065	10,00
16+16+20+20+42	1,26	1,26	1,58	1,58	3,32	9,00 (2,90 - 11,50)	4,09	**8,50 A+++**	2,20 (0,48 - 3,41)	1100	10,50	1,46	1,46	1,82	1,82	3,84	10,40 (3,40 - 14,50)	4,79	**4,68 A++**	2,17 (0,48 - 3,65)	1085	10,20
16+16+20+20+50	1,18	1,18	1,48	1,48	3,68	9,00 (2,90 - 11,50)	4,17	**8,50 A+++**	2,16 (0,53 - 3,28)	1080	10,30	1,36	1,36	1,70	1,70	4,28	10,40 (3,40 - 14,50)	4,73	**4,68 A++**	2,20 (0,56 - 3,59)	1100	10,30
16+16+20+20+60	1,09	1,09	1,36	1,36	4,10	9,00 (2,90 - 11,50)	4,17	**8,50 A+++**	2,16 (0,53 - 3,28)	1080	10,30	1,26	1,26	1,58	1,58	4,72	10,40 (3,40 - 14,50)	4,73	**4,68 A++**	2,20 (0,56 - 3,59)	1100	10,30
16+16+20+20+71	1,01	1,01	1,26	1,26	4,46	9,00 (2,90 - 11,50)	4,15	**8,50 A+++**	2,17 (0,57 - 3,28)	1085	10,40	1,16	1,16	1,45	1,45	5,18	10,40 (3,40 - 14,50)	4,73	**4,68 A++**	2,20 (0,57 - 3,58)	1100	10,30
16+16+20+25+25	1,41	1,41	1,76	2,21	2,21	9,00 (2,90 - 11,50)	4,09	**8,50 A+++**	2,20 (0,45 - 3,49)	1100	10,50	1,63	1,63	2,04	2,55	2,55	10,40 (3,40 - 14,50)	4,86	**4,68 A++**	2,14 (0,45 - 3,64)	1070	10,10
16+16+20+25+35	1,29	1,29	1,61	2,01	2,80	9,00 (2,90 - 11,50)	4,09	**8,50 A+++**	2,20 (0,48 - 3,49)	1100	10,50	1,49	1,49	1,86	2,32	3,24	10,40 (3,40 - 14,50)	4,88	**4,68 A++**	2,13 (0,47 - 3,66)	1065	10,00
16+16+20+25+42	1,21	1,21	1,51	1,89	3,18	9,00 (2,90 - 11,50)	4,09	**8,50 A+++**	2,20 (0,48 - 3,41)	1100	10,50	1,40	1,40	1,75	2,18	3,67	10,40 (3,40 - 14,50)	4,79	**4,68 A++**	2,17 (0,48 - 3,65)	1085	10,20
16+16+20+25+50	1,13	1,13	1,42	1,77	3,55	9,00 (2,90 - 11,50)	4,17	**8,50 A+++**	2,16 (0,53 - 3,28)	1080	10,30	1,31	1,31	1,64	2,05	4,09	10,40 (3,40 - 14,50)	4,73	**4,68 A++**	2,20 (0,56 - 3,59)	1100	10,30
16+16+20+25+60	1,05	1,05	1,31	1,64	3,95	9,00 (2,90 - 11,50)	4,17	**8,50 A+++**	2,16 (0,53 - 3,28)	1080	10,30	1,21	1,21	1,52	1,90	4,56	10,40 (3,40 - 14,50)	4,73	**4,68 A++**	2,20 (0,56 - 3,59)	1100	10,30
16+16+20+25+71	0,97	0,97	1,22	1,52	4,32	9,00 (2,90 - 11,50)	4,15	**8,50 A+++**	2,17 (0,57 - 3,28)	1085	10,40	1,12	1,12	1,41	1,76	4,99	10,40 (3,40 - 14,50)	4,73	**4,68 A++**	2,20 (0,57 - 3,58)	1100	10,30
16+16+20+35+35	1,18	1,18	1,48	2,58	2,58	9,00 (2,90 - 11,50)	4,07	**8,50 A+++**	2,21 (0,49 - 3,41)	1105	10,60	1,36	1,36	1,72	2,98	2,98	10,40 (3,40 - 14,50)	4,81	**4,68 A++**	2,16 (0,49 - 3,63)	1080	10,20
16+16+20+35+42	1,12	1,12	1,40	2,44	2,92	9,00 (2,90 - 11,50)	4,07	**8,50 A+++**	2,21 (0,49 - 3,41)	1105	10,60	1,29	1,29	1,61	2,82	3,39	10,40 (3,40 - 14,50)	4,84	**4,68 A++**	2,15 (0,50 - 3,62)	1075	10,10
16+16+20+35+50	1,05	1,05	1,31	2,30	3,29	9,00 (2,90 - 11,50)	4,15	**8,50 A+++**	2,17 (0,54 - 3,28)	1085	10,40	1,21	1,21	1,52	2,66	3,80	10,40 (3,40 - 14,50)	4,73	**4,68 A++**	2,20 (0,59 - 3,62)	1100	10,30
16+16+20+35+60	0,98	0,98	1,22	2,14	3,68	9,00 (2,90 - 11,50)	4,15	**8,50 A+++**	2,17 (0,54 - 3,28)	1085	10,40	1,13	1,13	1,41	2,48	4,25	10,40 (3,40 - 14,50)	4,73	**4,68 A++**	2,20 (0,59 - 3,62)	1100	10,30
16+16+20+35+71	0,91	0,91	1,14	1,99	4,05	9,00 (2,90 - 11,50)	4,15	**8,50 A+++**	2,17 (0,57 - 3,29)	1085	10,40	1,05	1,05	1,32	2,30	4,68	10,40 (3,40 - 14,50)	4,66	**4,68 A++**	2,23 (0,60 - 3,61)	1115	10,50
16+16+20+42+42	1,06	1,06	1,32	2,78	2,78	9,00 (2,90 - 11,50)	4,07	**8,50 A+++**	2,21 (0,49 - 3,42)	1105	10,60	1,22	1,22	1,54	3,21	3,21	10,40 (3,40 - 14,50)	4,84	**4,68 A++**	2,15 (0,51 - 3,61)	1075	10,10
16+16+20+42+50	1,00	1,00	1,25	2,63	3,12	9,00 (2,90 - 11,50)	4,15	**8,50 A+++**	2,17 (0,57 - 3,28)	1085	10,40	1,16	1,16	1,44	3,03	3,61	10,40 (3,40 - 14,50)	4,75	**4,68 A++**	2,19 (0,60 - 3,61)	1095	10,30
16+16+20+42+60	0,94	0,94	1,17	2,45	3,50	9,00 (2,90 - 11,50)	4,15	**8,50 A+++**	2,17 (0,57 - 3,28)	1085	10,40	1,08	1,08	1,35	2,84	4,05	10,40 (3,40 - 14,50)	4,75	**4,68 A++**	2,19 (0,60 - 3,61)	1095	10,30
16+16+20+42+71	0,87	0,87	1,09	2,29	3,88	9,00 (2,90 - 11,50)	4,15	**8,50 A+++**	2,17 (0,58 - 3,29)	1085	10,40	1,01	1,01	1,26	2,65	4,47	10,40 (3,40 - 14,50)	4,66	**4,68 A++**	2,23 (0,60 - 3,60)	1115	10,50
16+16+20+50+50	0,95	0,95	1,18	2,96	2,96	9,00 (2,90 - 11,50)	3,98	**8,50 A+++**	2,26 (0,63 - 3,23)	1130	10,80	1,09	1,09	1,38	3,42	3,42	10,40 (3,40 - 14,50)	4,54	**4,68 A++**	2,29 (0,70 - 3,62)	1145	10,80
16+16+20+50+60	0,89	0,89	1,11	2,78	3,33	9,00 (2,90 - 11,50)	3,98	**8,50 A+++**	2,26 (0,63 - 3,23)	1130	10,80	1,03	1,03	1,28	3,21	3,85	10,40 (3,40 - 14,50)	4,54	**4,68 A++**	2,29 (0,70 - 3,62)	1145	10,80
16+16+20+50+71	0,83	0,83	1,04	2,60	3,70	9,00 (2,90 - 11,50)	3,96	**8,50 A+++**	2,27 (0,66 - 3,24)	1135	10,90	0,96	0,96	1,20	3,01	4,27	10,40 (3,40 - 14,50)	4,46	**4,68 A++**	2,33 (0,71 - 3,66)	1165	10,90
16+16+20+60+60	0,84	0,84	1,04	3,14	3,14	9,00 (2,90 - 11,50)	3,98	**8,50 A+++**	2,26 (0,63 - 3,23)	1130	10,80	0,97	0,97	1,20	3,63	3,63	10,40 (3,40 - 14,50)	4,54	**4,68 A++**	2,29 (0,70 - 3,62)	1145	10,80
16+16+20+60+71	0,79	0,79	0,98	2,95	3,49	9,00 (2,90 - 11,50)	3,96	**8,50 A+++**	2,27 (0,66 - 3,24)	1135	10,90	0,91	0,91	1,14	3,41	4,03	10,40 (3,40 - 14,50)	4,46	**4,68 A++**	2,33 (0,71 - 3,66)	1165	10,90
16+16+25+25+25	1,35	1,35	2,10	2,10	2,10	9,00 (2,90 - 11,50)	4,09	**8,50 A+++**	2,20 (0,45 - 3,49)	1100	10,50	1,55	1,55	2,43	2,43	2,43	10,39 (3,40 - 14,50)	4,86	**4,68 A++**	2,14 (0,45 - 3,64)	1070	10,10
16+16+25+25+35	1,23	1,23	1,92	1,92	2,70	9,00 (2,90 - 11,50)	4,09	**8,50 A+++**	2,20 (0,48 - 3,49)	1100	10,50	1,42	1,42	2,22	2,22	3,12	10,40 (3,40 - 14,50)	4,88	**4,68 A++**	2,13 (0,47 - 3,66)	1065	10,00
16+16+25+25+42	1,16	1,16	1,81	1,81	3,06	9,00 (2,90 - 11,50)	4,09	**8,50 A+++**	2,20 (0,48 - 3,41)	1100	10,50	1,34	1,34	2,10	2,10	3,52	10,40 (3,40 - 14,50)	4,79	**4,68 A++**	2,17 (0,48 - 3,65)	1085	10,20
16+16+25+25+50	1,09	1,09	1,70	1,70	3,42	9,00 (2,90 - 11,50)	4,17	**8,50 A+++**	2,16 (0,53 - 3,28)	1080	10,30	1,26	1,26	1,97	1,97	3,94	10,40 (3,40 - 14,50)	4,73	**4,68 A++**	2,20 (0,56 - 3,59)	1100	10,30
16+16+25+25+60	1,01	1,01	1,58	1,58	3,82	9,00 (2,90 - 11,50)	4,17	**8,50 A+++**	2,16 (0,53 - 3,28)	1080	10,30	1,17	1,17	1,83	1,83	4,40	10,40 (3,40 - 14,50)	4,73	**4,68 A++**	2,20 (0,56 - 3,59)	1100	10,30
16+16+25+25+71	0,94	0,94	1,47	1,47	4,18	9,00 (2,90 - 11,50)	4,15	**8,50 A+++**	2,17 (0,57 - 3,28)	1085	10,40	1,09	1,09	1,70	1,70	4,82	10,40 (3,40 - 14,50)	4,73	**4,68 A++**	2,20 (0,57 - 3,58)	1100	10,30
16+16+25+35+35	1,13	1,13	1,78	2,48	2,48	9,00 (2,90 - 11,50)	4,07	**8,50 A+++**	2,21 (0,49 - 3,41)	1105	10,60	1,31	1,31	2,04	2,87	2,87	10,40 (3,40 - 14,50)	4,81	**4,68 A++**	2,16 (0,49 - 3,63)	1080	10,20
16+16+25+35+42	1,07	1,07	1,68	2,35	2,83	9,00 (2,90 - 11,50)	4,07	**8,50 A+++**	2,21 (0,49 - 3,41)	1105	10,60	1,24	1,24	1,94	2,72	3,26	10,40 (3,40 - 14,50)	4,84	**4,68 A++**	2,15 (0,50 - 3,62)	1075	10,10
16+16+25+35+50	1,01	1,01	1,58	2,22	3,18	9,00 (2,90 - 11,50)	4,15	**8,50 A+++**	2,17 (0,54 - 3,28)	1085	10,40	1,17	1,17	1,83	2,56	3,67	10,40 (3,40 - 14,50)	4,73	**4,68 A++**	2,20 (0,59 - 3,62)	1100	10,30
16+16+25+35+60	0,95	0,95	1,48	2,07	3,55	9,00 (2,90 - 11,50)	4,15	**8,50 A+++**	2,17 (0,54 - 3,28)	1085	10,40	1,09	1,09	1,71	2,39	4,12	10,40 (3,40 - 14,50)	4,73	**4,68 A++**	2,20 (0,59 - 3,62)	1100	10,30
16+16+25+35+71	0,88	0,88	1,38	1,93	3,93	9,00 (2,90 - 11,50)	4,15	**8,50 A+++**	2,17 (0,57 - 3,29)	1085	10,40	1,02	1,02	1,60	2,23	4,53	10,40 (3,40 - 14,50)	4,66	**4,68 A++**	2,23 (0,60 - 3,61)	1115	10,50
16+16+25+42+42	1,02	1,02	1,60	2,68	2,68	9,00 (2,90 - 11,50)	4,07	**8,50 A+++**	2,21 (0,49 - 3,42)	1105	10,60	1,18	1,18	1,84	3,10	3,10	10,40 (3,40 - 14,50)	4,84	**4,68 A++**	2,15 (0,51 - 3,61)	1075	10,10
16+16+25+42+50	0,97	0,97	1,51	2,54	3,01	9,00 (2,90 - 11,50)	4,15	**8,50 A+++**	2,17 (0,57 - 3,28)	1085	10,40	1,12	1,12	1,74	2,93	3,49	10,40 (3,40 - 14,50)	4,75	**4,68 A++**	2,19 (0,60 - 3,61)	1095	10,30
16+16+25+42+60	0,91	0,91	1,42	2,38	3,38	9,00 (2,90 - 11,50)	4,15	**8,50 A+++**	2,17 (0,57 - 3,28)	1085	10,40	1,05	1,05	1,64	2,75	3,91	10,40 (3,40 - 14,50)	4,75	**4,68 A++**	2,19 (0,60 - 3,61)	1095	10,30
16+16+25+42+71	0,85	0,85	1,32	2,22	3,76	9,00 (2,90 - 11,50)	4,15	**8,50 A+++**	2,17 (0,58 - 3,29)	1085	10,40	0,98	0,98	1,53	2,57	4,34	10,40 (3,40 - 14,50)	4,66	**4,68 A++**	2,23 (0,60 - 3,60)	1115	10,50
16+16+25+50+50	0,92	0,92	1,42	2,87	2,87	9,00 (2,90 - 11,50)	3,98	**8,50 A+++**	2,26 (0,63 - 3,23)	1130	10,80	1,06	1,06	1,66	3,31	3,31	10,40 (3,40 - 14,50)	4,54	**4,68 A++**	2,29 (0,70 - 3,62)	1145	10,80
16+16+25+50+60	0,86	0,86	1,35	2,69	3,24	9,00 (2,90 - 11,50)	3,98	**8,50 A+++**	2,26 (0,63 - 3,23)	1130	10,80	1,00	1,00	1,56	3,11	3,73	10,40 (3,40 - 14,50)	4,54	**4,68 A++**	2,29 (0,70 - 3,62)	1145	10,80
16+16+25+50+71	0,81	0,81	1,26	2,53	3,59	9,00 (2,90 - 11,50)	3,96	**8,50 A+++**	2,27 (0,66 - 3,24)	1135	10,90	0,93	0,93	1,46	2,92	4,16	10,40 (3,40 - 14,50)	4,46	**4,68 A++**	2,33 (0,71 - 3,66)	1165	10,90
16+16+25+60+60	0,81	0,81	1,28	3,05	3,05	9,00 (2,90 - 11,50)	3,98	**8,50 A+++**	2,26 (0,63 - 3,23)	1130	10,80	0,94	0,94	1,46	3,53	3,53	10,40 (3,40 - 14,50)	4,54	**4,68 A++**	2,29 (0,70 - 3,62)	1145	10,80
16+16+35+35+35	1,05	1,05	2,30	2,30	2,30	9,00 (2,90 - 11,50)	4,07	**8,50 A+++**	2,21 (0,49 - 3,42)	1105	10,60	1,21	1,21	2,66	2,66	2,66	10,40 (3,40 - 14,50)	4,84	**4,68 A++**	2,15 (0,51 - 3,60)	1075	10,10
16+16+35+35+42	1,00	1,00	2,19	2,19	2,62	9,00 (2,90 - 11,50)	4,07	**8,50 A+++**	2,21 (0,49 - 3,42)	1105	10,60	1,16	1,16	2,53	2,53	3,02	10,40 (3,40 - 14,50)	4,77	**4,68 A++**	2,18 (0,51 - 3,59)	1090	10,20
16+16+35+35+50	0,95	0,95	2,07	2,07	2,96	9,00 (2,90 - 11,50)	4,15	**8,50 A+++**	2,17 (0,57 - 3,28)	1085	10,40	1,09	1,09	2,39	2,39	3,44	10,40 (3,40 - 14,50)	4,66	**4,68 A++**	2,23 (0,61 - 3,59)	1115	10,50
16+16+35+35+60	0,89	0,89	1,94	1,94	3,34	9,00 (2,90 - 11,50)	4,15	**8,50 A+++**	2,17 (0,57 - 3,28)	1085	10,40	1,03	1,03	2,25	2,25	3,84	10,40 (3,40 - 14,50)	4,66	**4,68 A++**	2,23 (0,61 - 3,59)	1115	10,50

Free Multi 5x1 CU-5Z90TBE. Minimum capacity connected: 4,5 kW. Maximum capacity connected: 18,3 kW • R32 refrigerant

Indoor unit capacity	Cooling capacity (kW). Rooms						EER	SEER [1]	Input power rating	A.E.C.	Current	Heating capacity (kW). Rooms						COP	SCOP [1]	Input power rating	A.E.C.	Current
	A	B	C	D	E	Total (Min - Max)	W/W		kW	kWh	230V	A	B	C	D	E	Total (Min - Max)	W/W		kW	kWh	230V
16+16+35+35+71	0,83	0,83	1,82	1,82	3,70	9,00 (2,90 - 11,50)	4,13	**8,50 A+++**	2,18 (0,58 - 3,29)	1090	10,40	0,96	0,96	2,10	2,10	4,28	10,40 (3,40 - 14,50)	4,66	**4,68 A++**	2,23 (0,62 - 3,58)	1115	10,50
16+16+35+42+42	0,95	0,95	2,10	2,50	2,50	9,00 (2,90 - 11,50)	4,07	**8,50 A+++**	2,21 (0,49 - 3,34)	1105	10,60	1,10	1,10	2,42	2,89	2,89	10,40 (3,40 - 14,50)	4,77	**4,68 A++**	2,18 (0,52 - 3,64)	1090	10,20
16+16+35+42+50	0,91	0,91	1,98	2,38	2,82	9,00 (2,90 - 11,50)	4,15	**8,50 A+++**	2,17 (0,57 - 3,29)	1085	10,40	1,05	1,05	2,29	2,75	3,26	10,40 (3,40 - 14,50)	4,66	**4,68 A++**	2,23 (0,62 - 3,59)	1115	10,50
16+16+35+42+60	0,85	0,85	1,86	2,24	3,20	9,00 (2,90 - 11,50)	4,15	**8,50 A+++**	2,17 (0,57 - 3,29)	1085	10,40	0,98	0,98	2,15	2,58	3,71	10,40 (3,40 - 14,50)	4,66	**4,68 A++**	2,23 (0,62 - 3,59)	1115	10,50
16+16+35+42+71	0,80	0,80	1,75	2,10	3,55	9,00 (2,90 - 11,50)	4,13	**8,50 A+++**	2,18 (0,58 - 3,29)	1090	10,40	0,92	0,92	2,02	2,43	4,11	10,40 (3,40 - 14,50)	4,68	**4,68 A++**	2,22 (0,63 - 3,63)	1110	10,40
16+16+35+50+50	0,86	0,86	1,90	2,69	2,69	9,00 (2,90 - 11,50)	3,98	**8,50 A+++**	2,26 (0,66 - 3,24)	1130	10,80	1,00	1,00	2,18	3,11	3,11	10,40 (3,40 - 14,50)	4,46	**4,68 A++**	2,33 (0,72 - 3,65)	1165	10,90
16+16+35+50+60	0,81	0,81	1,78	2,54	3,06	9,00 (2,90 - 11,50)	3,98	**8,50 A+++**	2,26 (0,66 - 3,24)	1130	10,80	0,94	0,94	2,06	2,94	3,52	10,40 (3,40 - 14,50)	4,46	**4,68 A++**	2,33 (0,72 - 3,65)	1165	10,90
16+16+42+42+42	0,91	0,91	2,39	2,39	2,39	8,99 (2,90 - 11,50)	4,18	**8,50 A+++**	2,15 (0,49 - 3,34)	1075	10,30	1,06	1,06	2,76	2,76	2,76	10,40 (3,40 - 14,50)	4,77	**4,68 A++**	2,18 (0,53 - 3,63)	1090	10,20
16+16+42+42+50	0,87	0,87	2,28	2,28	2,70	9,00 (2,90 - 11,50)	4,15	**8,50 A+++**	2,17 (0,57 - 3,29)	1085	10,40	1,00	1,00	2,63	2,63	3,14	10,40 (3,40 - 14,50)	4,66	**4,68 A++**	2,23 (0,63 - 3,63)	1115	10,50
16+16+42+42+60	0,82	0,82	2,15	2,15	3,06	9,00 (2,90 - 11,50)	4,15	**8,50 A+++**	2,17 (0,57 - 3,29)	1085	10,40	0,95	0,95	2,48	2,48	3,54	10,40 (3,40 - 14,50)	4,66	**4,68 A++**	2,23 (0,63 - 3,63)	1115	10,50
16+16+42+50+50	0,83	0,83	2,16	2,59	2,59	9,00 (2,90 - 11,50)	3,96	**8,50 A+++**	2,27 (0,66 - 3,24)	1135	10,90	0,96	0,96	2,50	2,99	2,99	10,40 (3,40 - 14,50)	4,46	**4,68 A++**	2,33 (0,74 - 3,65)	1165	10,90
16+16+50+50+50	0,79	0,79	2,47	2,47	2,47	8,99 (2,90 - 11,50)	3,91	**8,50 A+++**	2,30 (0,76 - 3,27)	1150	11,00	0,91	0,91	2,86	2,86	2,86	10,40 (3,40 - 14,50)	4,19	**4,68 A++**	2,48 (0,86 - 3,73)	1240	11,70
16+20+20+20+20	1,48	1,88	1,88	1,88	1,88	9,00 (2,90 - 11,50)	4,09	**8,50 A+++**	2,20 (0,45 - 3,49)	1100	10,50	1,72	2,17	2,17	2,17	2,17	10,40 (3,40 - 14,50)	4,86	**4,68 A++**	2,14 (0,46 - 3,68)	1070	10,10
16+20+20+20+25	1,43	1,78	1,78	1,78	2,23	9,00 (2,90 - 11,50)	4,09	**8,50 A+++**	2,20 (0,45 - 3,49)	1100	10,50	1,65	2,06	2,06	2,06	2,57	10,40 (3,40 - 14,50)	4,86	**4,68 A++**	2,14 (0,46 - 3,68)	1070	10,10
16+20+20+20+35	1,30	1,62	1,62	1,62	2,84	9,00 (2,90 - 11,50)	4,09	**8,50 A+++**	2,20 (0,48 - 3,41)	1100	10,50	1,50	1,87	1,87	1,87	3,29	10,40 (3,40 - 14,50)	4,79	**4,68 A++**	2,17 (0,48 - 3,65)	1085	10,20
16+20+20+20+42	1,22	1,53	1,53	1,53	3,19	9,00 (2,90 - 11,50)	4,07	**8,50 A+++**	2,21 (0,48 - 3,41)	1105	10,60	1,41	1,76	1,76	1,76	3,71	10,40 (3,40 - 14,50)	4,81	**4,68 A++**	2,16 (0,48 - 3,64)	1080	10,20
16+20+20+20+50	1,14	1,43	1,43	1,43	3,57	9,00 (2,90 - 11,50)	4,17	**8,50 A+++**	2,16 (0,54 - 3,28)	1080	10,30	1,32	1,65	1,65	1,65	4,13	10,40 (3,40 - 14,50)	4,73	**4,68 A++**	2,20 (0,57 - 3,58)	1100	10,30
16+20+20+20+60	1,06	1,32	1,32	1,32	3,98	9,00 (2,90 - 11,50)	4,17	**8,50 A+++**	2,16 (0,54 - 3,28)	1080	10,30	1,22	1,53	1,53	1,53	4,59	10,40 (3,40 - 14,50)	4,73	**4,68 A++**	2,20 (0,57 - 3,58)	1100	10,30
16+20+20+20+71	0,98	1,22	1,22	1,22	4,36	9,00 (2,90 - 11,50)	4,15	**8,50 A+++**	2,17 (0,57 - 3,28)	1085	10,40	1,13	1,41	1,41	1,41	5,04	10,40 (3,40 - 14,50)	4,73	**4,68 A++**	2,20 (0,58 - 3,62)	1100	10,30
16+20+20+25+25	1,36	1,70	1,70	2,12	2,12	9,00 (2,90 - 11,50)	4,09	**8,50 A+++**	2,20 (0,45 - 3,49)	1100	10,50	1,58	1,96	1,96	2,45	2,45	10,40 (3,40 - 14,50)	4,86	**4,68 A++**	2,14 (0,46 - 3,68)	1070	10,10
16+20+20+25+35	1,24	1,55	1,55	1,94	2,72	9,00 (2,90 - 11,50)	4,09	**8,50 A+++**	2,20 (0,48 - 3,41)	1100	10,50	1,43	1,79	1,79	2,24	3,15	10,40 (3,40 - 14,50)	4,79	**4,68 A++**	2,17 (0,48 - 3,65)	1085	10,20
16+20+20+25+42	1,17	1,46	1,46	1,83	3,08	9,00 (2,90 - 11,50)	4,07	**8,50 A+++**	2,21 (0,48 - 3,41)	1105	10,60	1,35	1,69	1,69	2,11	3,56	10,40 (3,40 - 14,50)	4,81	**4,68 A++**	2,16 (0,48 - 3,64)	1080	10,20
16+20+20+25+50	1,10	1,37	1,37	1,72	3,44	9,00 (2,90 - 11,50)	4,17	**8,50 A+++**	2,16 (0,54 - 3,28)	1080	10,30	1,27	1,59	1,59	1,98	3,97	10,40 (3,40 - 14,50)	4,73	**4,68 A++**	2,20 (0,57 - 3,58)	1100	10,30
16+20+20+25+60	1,02	1,28	1,28	1,60	3,82	9,00 (2,90 - 11,50)	4,17	**8,50 A+++**	2,16 (0,54 - 3,28)	1080	10,30	1,18	1,48	1,48	1,84	4,42	10,40 (3,40 - 14,50)	4,73	**4,68 A++**	2,20 (0,57 - 3,58)	1100	10,30
16+20+20+25+71	0,95	1,18	1,18	1,48	4,21	9,00 (2,90 - 11,50)	4,15	**8,50 A+++**	2,17 (0,57 - 3,28)	1085	10,40	1,09	1,37	1,37	1,71	4,86	10,40 (3,40 - 14,50)	4,73	**4,68 A++**	2,20 (0,58 - 3,62)	1100	10,30
16+20+20+35+35	1,14	1,43	1,43	2,50	2,50	9,00 (2,90 - 11,50)	4,07	**8,50 A+++**	2,21 (0,49 - 3,41)	1105	10,60	1,32	1,65	1,65	2,89	2,89	10,40 (3,40 - 14,50)	4,84	**4,68 A++**	2,15 (0,50 - 3,62)	1075	10,10
16+20+20+35+42	1,08	1,35	1,35	2,37	2,85	9,00 (2,90 - 11,50)	4,07	**8,50 A+++**	2,21 (0,49 - 3,42)	1105	10,60	1,25	1,56	1,56	2,74	3,29	10,40 (3,40 - 14,50)	4,84	**4,68 A++**	2,15 (0,51 - 3,61)	1075	10,10
16+20+20+35+50	1,02	1,28	1,28	2,23	3,19	9,00 (2,90 - 11,50)	4,15	**8,50 A+++**	2,17 (0,57 - 3,28)	1085	10,40	1,18	1,48	1,48	2,58	3,68	10,40 (3,40 - 14,50)	4,75	**4,68 A++**	2,19 (0,60 - 3,61)	1095	10,30
16+20+20+35+60	0,95	1,19	1,19	2,09	3,58	9,00 (2,90 - 11,50)	4,15	**8,50 A+++**	2,17 (0,57 - 3,28)	1085	10,40	1,10	1,38	1,38	2,41	4,13	10,40 (3,40 - 14,50)	4,75	**4,68 A++**	2,19 (0,60 - 3,61)	1095	10,30
16+20+20+35+71	0,89	1,11	1,11	1,94	3,95	9,00 (2,90 - 11,50)	4,13	**8,50 A+++**	2,18 (0,58 - 3,29)	1090	10,40	1,03	1,28	1,28	2,25	4,56	10,40 (3,40 - 14,50)	4,66	**4,68 A++**	2,23 (0,60 - 3,60)	1115	10,50
16+20+20+42+42	1,02	1,29	1,29	2,70	2,70	9,00 (2,90 - 11,50)	4,07	**8,50 A+++**	2,21 (0,49 - 3,42)	1105	10,60	1,18	1,49	1,49	3,12	3,12	10,40 (3,40 - 14,50)	4,84	**4,68 A++**	2,15 (0,51 - 3,60)	1075	10,10
16+20+20+42+50	0,97	1,22	1,22	2,55	3,04	9,00 (2,90 - 11,50)	4,15	**8,50 A+++**	2,17 (0,57 - 3,28)	1085	10,40	1,12	1,41	1,41	2,95	3,51	10,40 (3,40 - 14,50)	4,66	**4,68 A++**	2,23 (0,60 - 3,60)	1115	10,50
16+20+20+42+60	0,91	1,14	1,14	2,39	3,42	9,00 (2,90 - 11,50)	4,15	**8,50 A+++**	2,17 (0,57 - 3,28)	1085	10,40	1,05	1,32	1,32	2,76	3,95	10,40 (3,40 - 14,50)	4,66	**4,68 A++**	2,23 (0,60 - 3,60)	1115	10,50
16+20+20+42+71	0,85	1,07	1,07	2,24	3,77	9,00 (2,90 - 11,50)	4,13	**8,50 A+++**	2,18 (0,58 - 3,29)	1090	10,40	0,98	1,23	1,23	2,58	4,38	10,40 (3,40 - 14,50)	4,66	**4,68 A++**	2,23 (0,62 - 3,59)	1115	10,50
16+20+20+50+50	0,94	1,15	1,15	2,88	2,88	9,00 (2,90 - 11,50)	3,98	**8,50 A+++**	2,26 (0,63 - 3,23)	1130	10,80	1,08	1,33	1,33	3,33	3,33	10,40 (3,40 - 14,50)	4,46	**4,68 A++**	2,33 (0,71 - 3,61)	1165	10,90
16+20+20+50+60	0,87	1,08	1,08	2,71	3,26	9,00 (2,90 - 11,50)	3,98	**8,50 A+++**	2,26 (0,63 - 3,23)	1130	10,80	1,00	1,25	1,25	3,13	3,77	10,40 (3,40 - 14,50)	4,46	**4,68 A++**	2,33 (0,71 - 3,61)	1165	10,90
16+20+20+50+71	0,81	1,02	1,02	2,54	3,61	9,00 (2,90 - 11,50)	3,96	**8,50 A+++**	2,27 (0,67 - 3,24)	1135	10,90	0,94	1,18	1,18	2,94	4,16	10,40 (3,40 - 14,50)	4,46	**4,68 A++**	2,33 (0,72 - 3,66)	1165	10,90
16+20+20+60+60	0,82	1,02	1,02	3,07	3,07	9,00 (2,90 - 11,50)	3,98	**8,50 A+++**	2,26 (0,63 - 3,23)	1130	10,80	0,94	1,18	1,18	3,55	3,55	10,40 (3,40 - 14,50)	4,46	**4,68 A++**	2,33 (0,71 - 3,61)	1165	10,90
16+20+25+25+25	1,29	1,62	2,03	2,03	2,03	9,00 (2,90 - 11,50)	4,09	**8,50 A+++**	2,20 (0,45 - 3,49)	1100	10,50	1,50	1,88	2,34	2,34	2,34	10,40 (3,40 - 14,50)	4,86	**4,68 A++**	2,14 (0,46 - 3,68)	1070	10,10
16+20+25+25+35	1,19	1,49	1,86	1,86	2,60	9,00 (2,90 - 11,50)	4,09	**8,50 A+++**	2,20 (0,48 - 3,41)	1100	10,50	1,38	1,72	2,15	2,15	3,00	10,40 (3,40 - 14,50)	4,79	**4,68 A++**	2,17 (0,48 - 3,65)	1085	10,20
16+20+25+25+42	1,13	1,41	1,76	1,76	2,94	9,00 (2,90 - 11,50)	4,07	**8,50 A+++**	2,21 (0,48 - 3,41)	1105	10,60	1,30	1,63	2,03	2,03	3,41	10,40 (3,40 - 14,50)	4,81	**4,68 A++**	2,16 (0,48 - 3,64)	1080	10,20
16+20+25+25+50	1,06	1,32	1,65	1,65	3,32	9,00 (2,90 - 11,50)	4,17	**8,50 A+++**	2,16 (0,54 - 3,28)	1080	10,30	1,22	1,53	1,91	1,91	3,83	10,40 (3,40 - 14,50)	4,73	**4,68 A++**	2,20 (0,57 - 3,58)	1100	10,30
16+20+25+25+60	0,99	1,23	1,54	1,54	3,70	9,00 (2,90 - 11,50)	4,17	**8,50 A+++**	2,16 (0,54 - 3,28)	1080	10,30	1,14	1,42	1,78	1,78	4,28	10,40 (3,40 - 14,50)	4,73	**4,68 A++**	2,20 (0,57 - 3,58)	1100	10,30
16+20+25+25+71	0,92	1,15	1,43	1,43	4,07	9,00 (2,90 - 11,50)	4,15	**8,50 A+++**	2,17 (0,57 - 3,28)	1085	10,40	1,06	1,32	1,66	1,66	4,70	10,40 (3,40 - 14,50)	4,73	**4,68 A++**	2,20 (0,58 - 3,62)	1100	10,30
16+20+25+35+35	1,10	1,37	1,73	2,40	2,40	9,00 (2,90 - 11,50)	4,07	**8,50 A+++**	2,21 (0,49 - 3,41)	1105	10,60	1,27	1,59	1,98	2,78	2,78	10,40 (3,40 - 14,50)	4,84	**4,68 A++**	2,15 (0,50 - 3,62)	1075	10,10
16+20+25+35+42	1,04	1,30	1,63	2,28	2,75	9,00 (2,90 - 11,50)	4,07	**8,50 A+++**	2,21 (0,49 - 3,42)	1105	10,60	1,21	1,51	1,88	2,64	3,16	10,40 (3,40 - 14,50)	4,84	**4,68 A++**	2,15 (0,51 - 3,61)	1075	10,10
16+20+25+35+50	0,99	1,23	1,54	2,16	3,08	9,00 (2,90 - 11,50)	4,15	**8,50 A+++**	2,17 (0,57 - 3,28)	1085	10,40	1,14	1,42	1,78	2,49	3,57	10,40 (3,40 - 14,50)	4,75	**4,68 A++**	2,19 (0,60 - 3,61)	1095	10,30
16+20+25+35+60	0,92	1,15	1,44	2,02	3,47	9,00 (2,90 - 11,50)	4,15	**8,50 A+++**	2,17 (0,57 - 3,28)	1085	10,40	1,07	1,33	1,67	2,33	4,00	10,40 (3,40 - 14,50)	4,75	**4,68 A++**	2,19 (0,60 - 3,61)	1095	10,30
16+20+25+35+71	0,86	1,08	1,35	1,89	3,82	9,00 (2,90 - 11,50)	4,13	**8,50 A+++**	2,18 (0,58 - 3,29)	1090	10,40	1,00	1,25	1,56	2,18	4,41	10,40 (3,40 - 14,50)	4,66	**4,68 A++**	2,23 (0,60 - 3,60)	1115	10,50
16+20+25+42+42	0,99	1,24	1,55	2,61	2,61	9,00 (2,90 - 11,50)	4,07	**8,50 A+++**	2,21 (0,49 - 3,42)	1105	10,60	1,15	1,43	1,80	3,01	3,01	10,40 (3,40 - 14,50)	4,84	**4,68 A++**	2,15 (0,51 - 3,60)	1075	10,10
16+20+25+42+50	0,94	1,18	1,47	2,47	2,94	9,00 (2,90 - 11,50)	4,15	**8,50 A+++**	2,17 (0,57 - 3,28)	1085	10,40	1,09	1,36	1,70	2,85	3,40	10,40 (3,40 - 14,50)	4,66	**4,68 A++**	2,23 (0,60 - 3,60)	1115	10,50
16+20+25+42+60	0,88	1,10	1,38	2,32	3,32	9,00 (2,90 - 11,50)	4,15	**8,50 A+++**	2,17 (0,57 - 3,28)	1085	10,40	1,02	1,28	1,60	2,68	3,82	10,40 (3,40 - 14,50)	4,66	**4,68 A++**	2,23 (0,60 - 3,60)	1115	10,50
16+20+25+42+71	0,83	1,03	1,29	2,17	3,68	9,00 (2,90 - 11,50)	4,13	**8,50 A+++**	2,18 (0,58 - 3,29)	1090	10,40	0,96	1,20	1,49	2,51	4,24	10,40 (3,40 - 14,50)	4,66	**4,68 A++**	2,23 (0,62 - 3,59)	1115	10,50
16+20+25+50+50	0,89	1,12	1,39	2,80	2,80	9,00 (2,90 - 11,50)	3,98	**8,50 A+++**	2,26 (0,63 - 3,23)	1130	10,80	1,03	1,29	1,62	3,23	3,23	10,40 (3,40 - 14,50)	4,46	**4,68 A++**	2,33 (0,71 - 3,61)	1165	10,90
16+20+25+50+60	0,84	1,05	1,32	2,63	3,16	9,00 (2,90 - 11,50)	3,98	**8,50 A+++**	2,26 (0,63 - 3,23)	1130	10,80	0,97	1,22	1,52	3,04	3,65	10,40 (3,40 - 14,50)	4,46	**4,68 A++**	2,33 (0,71 - 3,61)	1165	10,90
16+20+25+50+71	0,79	0,99	1,24	2,47	3,51	9,00 (2,90 - 11,50)	3,96	**8,50 A+++**	2,27 (0,67 - 3,24)	1135	10,90	0,91	1,14	1,43	2,86	4,06	10,40 (3,40 - 14,50)	4,46	**4,68 A++**	2,33 (0,72 - 3,66)	1165	10,90
16+20+25+60+60	0,80	0,99	1,25	2,98	2,98	9,00 (2,90 - 11,50)	3,98	**8,50 A+++**	2,26 (0,63 - 3,23)	1130	10,80	0,91	1,15	1,44	3,45	3,45	10,40 (3,40 - 14,50)	4,46	**4,68 A++**	2,33 (0,71 - 3,61)	1165	10,90
16+20+35+35+35	1,02	1,29	2,23	2,23	2,23	9,00 (2,90 - 11,50)	4,07	**8,50 A+++**	2,21 (0,49 - 3,34)	1105	10,60	1,18	1,48	2,58	2,58	2,58	10,40 (3,40 - 14,50)	4,77	**4,68 A++**	2,18 (0,51 - 3,59)	1090	10,20
16+20+35+35+42	0,97	1,22	2,13	2,13	2,55	9,00 (2,90 - 11,50)	4,19	**8,50 A+++**	2,15 (0,49 - 3,34)	1075	10,30	1,12	1,41	2,46	2,46	2,95	10,40 (3,40 - 14,50)	4,77	**4,68 A++**	2,18 (0,52 - 3,64)	1090	10,20
16+20+35+35+50	0,92	1,15	2,02	2,02	2,89	9,00 (2,90 - 11,50)	4,15	**8,50 A+++**	2,17 (0,57 - 3,29)	1085	10,40	1,07	1,33	2,33	2,33	3,34	10,40 (3,40 - 14,50)	4,66	**4,68 A++**	2,23 (0,62 - 3,59)	1115	10,50
16+20+35+35+60	0,87	1,08	1,90	1,90	3,25	9,00 (2,90 - 11,50)	4,15	**8,50 A+++**	2,17 (0,57 - 3,29)	1085	10,40	1,00	1,25	2,19	2,19	3,77	10,40 (3,40 - 14,50)	4,66	**4,68 A++**	2,23 (0,62 - 3,59)	1115	10,50
16+20+35+35+71	0,81	1,02	1,78	1,78	3,61	9,00 (2,90 - 11,50)	4,13	**8,50 A+++**	2,18 (0,58 - 3,29)	1090	10,40	0,94	1,18	2,06	2,06	4,16	10,40 (3,40 - 14,50)	4,68	**4,68 A++**	2,22 (0,63 - 3,63)	1110	10,40
16+20+35+42+42	0,93	1,16	2,03	2,44	2,44	9,00 (2,90 - 11,50)	4,19	**8,50 A+++**	2,15 (0,49 - 3,34)	1075	10,30	1,07	1,34	2,35	2,82	2,82	10,40 (3,40 - 14,50)	4,77	**4,68 A++**	2,18 (0,53 - 3,63)	1090	10,20
16+20+35+42+50	0,88	1,10	1,93	2,32	2,77	9,00 (2,90 - 11,50)	4,13	**8,50 A+++**	2,18 (0,58 - 3,29)	1090	10,40	1,02	1,28	2,23	2,68	3,19	10,40 (3,40 - 14,50)	4,66	**4,68 A++**	2,23 (0,63 - 3,63)	1115	10,50
16+20+35+42+60	0,83	1,04	1,82	2,18	3,13	9,00 (2,90 - 11,50)	4,13	**8,50 A+++**	2,18 (0,58 - 3,29)	1090	10,40	0,96	1,20	2,10	2,52	3,62	10,40 (3,40 - 14,50)	4,66	**4,68 A++**	2,23 (0,63 - 3,63)	1115	10,50
16+20+35+50+50	0,84	1,05	1,85	2,63	2,63	9,00 (2,90 - 11,50)	3,96	**8,50 A+++**	2,27 (0,66 - 3,24)	1135	10,90	0,97	1,22	2,13	3,04	3,04	10,40 (3,40 - 14,50)	4,46	**4,68 A++**	2,33 (0,74 - 3,65)	1165	10,90
16+20+35+50+60	0,80	0,99	1,74	2,49	2,98	9,00 (2,90 - 11,50)	3,96	**8,50 A+++**	2,27 (0,66 - 3,24)	1135	10,90	0,92	1,15	2,01	2,87	3,45	10,40 (3,40 - 14,50)	4,46	**4,68 A++**	2,33 (0,74 - 3,65)	1165	10,90
16+20+42+42+42	0,89	1,12	2,33	2,33	2,33	9,00 (2,90 - 11,50)	4,19	**8,50 A+++**	2,15 (0,52 - 3,34)	1075	10,30	1,02	1,28	2,70	2,70	2,70	10,40 (3,40 - 14,50)	4,79	**4,68 A++**	2,17 (0,54 - 3,62)	1085	10,20
16+20+42+42+50	0,85	1,06	2,22	2,22	2,65	9,00 (2,90 - 11,50)	4,13	**8,50 A+++**	2,18 (0,58 - 3,29)	1090	10,40	0,98	1,22	2,57	2,57	3,06	10,40 (3,40 - 14,50)	4,60	**4,68 A++**	2,26 (0,63 - 3,62)	1130	10,60
16+20+42+42+60	0,80	1,00	2,10	2,10	3,00	9,00 (2,90 - 11,50)	4,13	**8,50 A+++**	2,18 (0,58 - 3,29)	1090	10,40	0,92	1,16	2,43	2,43	3,46	10,40 (3,40 - 14,50)	4,60	**4,68 A++**	2,26 (0,63 - 3,62)	1130	10,60
16+20+42+50+50	0,81	1,01	2,12	2,53	2,53	9,00 (2,90 - 11,50)	3,96	**8,50 A+++**	2,27 (0,67 - 3,24)	1135	10,90	0,93	1,17	2,46	2,92	2,92	10,40 (3,40 - 14,50)	4,41	**4,68 A++**	2,36 (0,75 - 3,64)	1180	11,10
16+25+25+25+25	1,24	1,94	1,94	1,94	1,94	9,00 (2,90 - 11,50)	4,09	**8,50 A+++**	2,20 (0,45 - 3,49)	1100	10,50	1,44	2,24	2,24	2,24	2,24	10,40 (3,40 - 14,50)	4,86	**4,68 A++**	2,14 (0,46 - 3,68)	1070	10,10
16+25+25+25+35	1,14	1,79	1,79	1,79	2,49	9,00 (2,90 - 11,50)	4,09	**8,50 A+++**	2,20 (0,48 - 3,41)	1100	10,50	1,32	2,06	2,06	2,06	2,90	10,40 (3,40 - 14,50)	4,79	**4,68 A++**	2,17 (0,48 - 3,65)	1085	10,20
16+25+25+25+42	1,08	1,69	1,69	1,69	2,85	9,00 (2,90 - 11,50)	4,07	**8,50 A+++**	2,21 (0,48 - 3,41)	1105	10,60	1,25	1,95	1,95	1,95	3,30	10,40 (3,40 - 14,50)	4,81	**4,68 A++**	2,16 (0,48 - 3,64)	1080	10,20
16+25+25+25+50	1,02	1,60	1,60	1,60	3,18	9,00 (2,90 - 11,50)	4,17	**8,50 A+++**	2,16 (0,54 - 3,28)	1080	10,30	1,18	1,84	1,84	1,84	3,70	10,40 (3,40 - 14,50)	4,73	**4,68 A++**	2,20 (0,57 - 3,58)	1100	10,30
16+25+25+25+60	0,95	1,49	1,49	1,49	3,58	9,00 (2,90 - 11,50)	4,17	**8,50 A+++**	2,16 (0,54 - 3,28)	1080	10,30	1,10	1,72	1,72	1,72	4,14	10,40 (3,40 - 14,50)	4,73	**4,68 A++**	2,20 (0,57 - 3,58)	1100	10,30
16+25+25+25+71	0,89	1,39	1,39	1,39	3,94	9,00 (2,90 - 11,50)	4,15	**8,50 A+++**	2,17 (0,57 - 3,28)	1085	10,40	1,03	1,60	1,60	1,60	4,57	10,40 (3,40 - 14,50)	4,73	**4,68 A++**	2,20 (0,58 - 3,62)	1100	10,30
16+25+25+35+35	1,06	1,65	1,65	2,32	2,32	9,00 (2,90 - 11,50)	4,07	**8,50 A+++**	2,21 (0,49 - 3,41)	1105	10,60	1,22	1,91	1,91	2,68	2,68	10,40 (3,40 - 14,50)	4,84	**4,68 A++**	2,15 (0,50 - 3,62)	1075	10,10
16+25+25+35+42	1,01	1,57	1,57	2,20	2,65	9,00 (2,90 - 11,50)	4,07	**8,50 A+++**	2,21 (0,49 - 3,42)	1105	10,60	1,16	1,82	1,82	2,55	3,05	10,40 (3,40 - 14,50)	4,84	**4,68 A++**	2,15 (0,51 - 3,61)	1075	10,10
16+25+25+35+50	0,95	1,49	1,49	2,09	2,98	9,00 (2,90 - 11,50)	4,15	**8,50 A+++**	2,17 (0,57 - 3,28)	1085	10,40	1,10	1,72	1,72	2,41	3,45	10,40 (3,40 - 14,50)	4,75	**4,68 A++**	2,19 (0,60 - 3,61)	1095	10,30
16+25+25+35+60	0,89	1,40	1,40	1,96	3,35	9,00 (2,90 - 11,50)	4,15	**8,50 A+++**	2,17 (0,57 - 3,28)	1085	10,40	1,03	1,61	1,61	2,26	3,89	10,40 (3,40 - 14,50)	4,75	**4,68 A++**	2,19 (0,60 - 3,61)	1095	10,30

Rating Conditions: Cooling Indoor 27°C DB / 19°C WB. Cooling Outdoor 35°C DB / 24°C WB. Heating Indoor 20°C DB. Heating Outdoor 7°C DB / 6°C WB. (DB: Dry Bulb; WB: Wet Bulb).
Specifications subject to change without notice. For detailed information about ErP / Energy Labelling, please visit our websites www.aircon.panasonic.eu or www.ptc.panasonic.eu.

Free Multi R32 combinations table

Free Multi 5x1 CU-5Z90TBE. Minimum capacity connected: 4,5 kW. Maximum capacity connected: 18,3 kW • R32 refrigerant

Indoor unit capacity	Cooling capacity (kW). Rooms A	B	C	D	E	Total (Min - Max)	EER W/W	SEER [1]	Input power rating kW	A.E.C. kWh	Current 230V	Heating capacity (kW). Rooms A	B	C	D	E	Total (Min - Max)	COP W/W	SCOP [1]	Input power rating kW	A.E.C. kWh	Current 230V
16+25+25+35+71	0,84	1,31	1,31	1,83	3,71	9,00 (2,90 - 11,50)	4,13	**8,50 A+++**	2,18 (0,58 - 3,29)	1090	10,40	0,97	1,51	1,51	2,12	4,29	10,40 (3,40 - 14,50)	4,66	**4,68 A++**	2,23 (0,60 - 3,60)	1115	10,50
16+25+25+42+42	0,96	1,50	1,50	2,52	2,52	9,00 (2,90 - 11,50)	4,07	**8,50 A+++**	2,21 (0,49 - 3,42)	1105	10,60	1,12	1,73	1,73	2,91	2,91	10,40 (3,40 - 14,50)	4,84	**4,68 A++**	2,15 (0,51 - 3,60)	1075	10,10
16+25+25+42+50	0,91	1,42	1,42	2,39	2,86	9,00 (2,90 - 11,50)	4,15	**8,50 A+++**	2,17 (0,57 - 3,28)	1085	10,40	1,05	1,65	1,65	2,76	3,29	10,40 (3,40 - 14,50)	4,66	**4,68 A++**	2,23 (0,60 - 3,60)	1115	10,50
16+25+25+42+60	0,86	1,34	1,34	2,25	3,21	9,00 (2,90 - 11,50)	4,15	**8,50 A+++**	2,17 (0,57 - 3,28)	1085	10,40	0,99	1,55	1,55	2,60	3,71	10,40 (3,40 - 14,50)	4,66	**4,68 A++**	2,23 (0,60 - 3,60)	1115	10,50
16+25+25+42+71	0,80	1,26	1,26	2,11	3,57	9,00 (2,90 - 11,50)	4,13	**8,50 A+++**	2,18 (0,58 - 3,29)	1090	10,40	0,93	1,45	1,45	2,44	4,13	10,40 (3,40 - 14,50)	4,66	**4,68 A++**	2,23 (0,62 - 3,59)	1115	10,50
16+25+25+50+50	0,86	1,36	1,36	2,71	2,71	9,00 (2,90 - 11,50)	3,98	**8,50 A+++**	2,26 (0,63 - 3,23)	1130	10,80	1,00	1,57	1,57	3,13	3,13	10,40 (3,40 - 14,50)	4,46	**4,68 A++**	2,33 (0,71 - 3,61)	1165	10,90
16+25+25+50+60	0,82	1,28	1,28	2,56	3,06	9,00 (2,90 - 11,50)	3,98	**8,50 A+++**	2,26 (0,63 - 3,23)	1130	10,80	0,95	1,48	1,48	2,95	3,54	10,40 (3,40 - 14,50)	4,46	**4,68 A++**	2,33 (0,71 - 3,61)	1165	10,90
16+25+35+35+35	0,99	1,53	2,16	2,16	2,16	9,00 (2,90 - 11,50)	4,07	**8,50 A+++**	2,21 (0,49 - 3,34)	1105	10,60	1,14	1,79	2,49	2,49	2,49	10,40 (3,40 - 14,50)	4,77	**4,68 A++**	2,18 (0,51 - 3,59)	1090	10,20
16+25+35+35+42	0,94	1,47	2,06	2,06	2,47	9,00 (2,90 - 11,50)	4,19	**8,50 A+++**	2,15 (0,49 - 3,34)	1075	10,30	1,09	1,70	2,38	2,38	2,85	10,40 (3,40 - 14,50)	4,77	**4,68 A++**	2,18 (0,52 - 3,64)	1090	10,20
16+25+35+35+50	0,89	1,40	1,96	1,96	2,79	9,00 (2,90 - 11,50)	4,15	**8,50 A+++**	2,17 (0,57 - 3,29)	1085	10,40	1,03	1,61	2,26	2,26	3,24	10,40 (3,40 - 14,50)	4,66	**4,68 A++**	2,23 (0,62 - 3,59)	1115	10,50
16+25+35+35+60	0,84	1,32	1,84	1,84	3,16	9,00 (2,90 - 11,50)	4,15	**8,50 A+++**	2,17 (0,57 - 3,29)	1085	10,40	0,97	1,52	2,13	2,13	3,65	10,40 (3,40 - 14,50)	4,66	**4,68 A++**	2,23 (0,62 - 3,59)	1115	10,50
16+25+35+35+71	0,79	1,24	1,73	1,73	3,51	9,00 (2,90 - 11,50)	4,13	**8,50 A+++**	2,18 (0,58 - 3,29)	1090	10,40	0,91	1,43	2,00	2,00	4,06	10,40 (3,40 - 14,50)	4,68	**4,68 A++**	2,22 (0,63 - 3,63)	1110	10,40
16+25+35+42+42	0,90	1,41	1,97	2,36	2,36	9,00 (2,90 - 11,50)	4,19	**8,50 A+++**	2,15 (0,49 - 3,34)	1075	10,30	1,03	1,63	2,28	2,73	2,73	10,40 (3,40 - 14,50)	4,77	**4,68 A++**	2,18 (0,53 - 3,63)	1090	10,20
16+25+35+42+50	0,86	1,34	1,88	2,25	2,67	9,00 (2,90 - 11,50)	4,13	**8,50 A+++**	2,18 (0,58 - 3,29)	1090	10,40	0,99	1,55	2,17	2,60	3,09	10,40 (3,40 - 14,50)	4,66	**4,68 A++**	2,23 (0,63 - 3,63)	1115	10,50
16+25+35+42+60	0,81	1,26	1,77	2,12	3,04	9,00 (2,90 - 11,50)	4,13	**8,50 A+++**	2,18 (0,58 - 3,29)	1090	10,40	0,93	1,46	2,04	2,45	3,52	10,40 (3,40 - 14,50)	4,66	**4,68 A++**	2,23 (0,63 - 3,63)	1115	10,50
16+25+35+50+50	0,82	1,28	1,78	2,56	2,56	9,00 (2,90 - 11,50)	3,96	**8,50 A+++**	2,27 (0,66 - 3,24)	1135	10,90	0,95	1,48	2,07	2,95	2,95	10,40 (3,40 - 14,50)	4,46	**4,68 A++**	2,33 (0,74 - 3,65)	1165	10,90
16+25+42+42+42	0,86	1,36	2,26	2,26	2,26	9,00 (2,90 - 11,50)	4,19	**8,50 A+++**	2,15 (0,52 - 3,34)	1075	10,30	0,98	1,56	2,62	2,62	2,62	10,40 (3,40 - 14,50)	4,79	**4,68 A++**	2,17 (0,54 - 3,62)	1085	10,20
16+25+42+42+50	0,82	1,29	2,16	2,16	2,57	9,00 (2,90 - 11,50)	4,13	**8,50 A+++**	2,18 (0,58 - 3,29)	1090	10,40	0,95	1,49	2,50	2,50	2,96	10,40 (3,40 - 14,50)	4,60	**4,68 A++**	2,26 (0,63 - 3,62)	1130	10,60
16+25+42+50+50	0,79	1,23	2,06	2,46	2,46	9,00 (2,90 - 11,50)	3,96	**8,50 A+++**	2,27 (0,67 - 3,24)	1135	10,90	0,91	1,42	2,39	2,84	2,84	10,40 (3,40 - 14,50)	4,41	**4,68 A++**	2,36 (0,75 - 3,64)	1180	11,10
16+35+35+35+35	0,92	2,02	2,02	2,02	2,02	9,00 (2,90 - 11,50)	4,19	**8,50 A+++**	2,15 (0,52 - 3,35)	1075	10,30	1,08	2,33	2,33	2,33	2,33	10,40 (3,40 - 14,50)	4,79	**4,68 A++**	2,17 (0,54 - 3,62)	1085	10,20
16+35+35+35+42	0,88	1,93	1,93	1,93	2,33	9,00 (2,90 - 11,50)	4,17	**8,50 A+++**	2,16 (0,52 - 3,35)	1080	10,30	1,02	2,23	2,23	2,23	2,69	10,40 (3,40 - 14,50)	4,79	**4,68 A++**	2,17 (0,54 - 3,61)	1085	10,20
16+35+35+35+50	0,84	1,84	1,84	1,84	2,64	9,00 (2,90 - 11,50)	4,13	**8,50 A+++**	2,18 (0,58 - 3,29)	1090	10,40	0,97	2,13	2,13	2,13	3,04	10,40 (3,40 - 14,50)	4,60	**4,68 A++**	2,26 (0,65 - 3,62)	1130	10,60
16+35+35+35+60	0,80	1,74	1,74	1,74	2,98	9,00 (2,90 - 11,50)	4,13	**8,50 A+++**	2,18 (0,58 - 3,29)	1090	10,40	0,92	2,01	2,01	2,01	3,45	10,40 (3,40 - 14,50)	4,60	**4,68 A++**	2,26 (0,65 - 3,62)	1130	10,60
16+35+35+42+42	0,86	1,85	1,85	2,22	2,22	9,00 (2,90 - 11,50)	4,17	**8,50 A+++**	2,16 (0,53 - 3,35)	1080	10,30	0,98	2,14	2,14	2,57	2,57	10,40 (3,40 - 14,50)	4,79	**4,68 A++**	2,17 (0,55 - 3,60)	1085	10,20
16+35+35+42+50	0,81	1,77	1,77	2,12	2,53	9,00 (2,90 - 11,50)	4,13	**8,50 A+++**	2,18 (0,58 - 3,29)	1090	10,40	0,93	2,04	2,04	2,45	2,94	10,40 (3,40 - 14,50)	4,60	**4,68 A++**	2,26 (0,65 - 3,61)	1130	10,60
16+35+42+42+42	0,81	1,77	2,14	2,14	2,14	9,00 (2,90 - 11,50)	4,17	**8,50 A+++**	2,16 (0,53 - 3,35)	1080	10,30	0,93	2,06	2,47	2,47	2,47	10,40 (3,40 - 14,50)	4,73	**4,68 A++**	2,20 (0,56 - 3,59)	1100	10,30
20+20+20+20+20	1,80	1,80	1,80	1,80	1,80	9,00 (2,90 - 11,50)	4,09	**8,50 A+++**	2,20 (0,48 - 3,49)	1100	10,50	2,08	2,08	2,08	2,08	2,08	10,40 (3,40 - 14,50)	4,88	**4,68 A++**	2,13 (0,46 - 3,67)	1065	10,00
20+20+20+20+25	1,71	1,71	1,71	1,71	2,16	9,00 (2,90 - 11,50)	4,09	**8,50 A+++**	2,20 (0,48 - 3,49)	1100	10,50	1,98	1,98	1,98	1,98	2,48	10,40 (3,40 - 14,50)	4,88	**4,68 A++**	2,13 (0,46 - 3,67)	1065	10,00
20+20+20+20+35	1,57	1,57	1,57	1,57	2,72	9,00 (2,90 - 11,50)	4,07	**8,50 A+++**	2,21 (0,48 - 3,41)	1105	10,60	1,81	1,81	1,81	1,81	3,16	10,40 (3,40 - 14,50)	4,81	**4,68 A++**	2,16 (0,48 - 3,64)	1080	10,20
20+20+20+20+42	1,48	1,48	1,48	1,48	3,08	9,00 (2,90 - 11,50)	4,07	**8,50 A+++**	2,21 (0,49 - 3,41)	1105	10,60	1,70	1,70	1,70	1,70	3,60	10,40 (3,40 - 14,50)	4,81	**4,68 A++**	2,16 (0,49 - 3,63)	1080	10,20
20+20+20+20+50	1,38	1,38	1,38	1,38	3,48	9,00 (2,90 - 11,50)	4,15	**8,50 A+++**	2,17 (0,54 - 3,28)	1085	10,40	1,60	1,60	1,60	1,60	4,00	10,40 (3,40 - 14,50)	4,73	**4,68 A++**	2,20 (0,58 - 3,63)	1100	10,30
20+20+20+20+60	1,29	1,29	1,29	1,29	3,84	9,00 (2,90 - 11,50)	4,15	**8,50 A+++**	2,17 (0,54 - 3,28)	1085	10,40	1,49	1,49	1,49	1,49	4,44	10,40 (3,40 - 14,50)	4,73	**4,68 A++**	2,20 (0,58 - 3,63)	1100	10,30
20+20+20+20+71	1,19	1,19	1,19	1,19	4,24	9,00 (2,90 - 11,50)	4,15	**8,50 A+++**	2,17 (0,57 - 3,28)	1085	10,40	1,38	1,38	1,38	1,38	4,88	10,40 (3,40 - 14,50)	4,75	**4,68 A++**	2,19 (0,59 - 3,61)	1095	10,30
20+20+20+25+25	1,64	1,64	1,64	2,04	2,04	9,00 (2,90 - 11,50)	4,09	**8,50 A+++**	2,20 (0,48 - 3,49)	1100	10,50	1,89	1,89	1,89	2,36	2,36	10,39 (3,40 - 14,50)	4,88	**4,68 A++**	2,13 (0,46 - 3,67)	1065	10,00
20+20+20+25+35	1,50	1,50	1,50	1,88	2,62	9,00 (2,90 - 11,50)	4,07	**8,50 A+++**	2,21 (0,48 - 3,41)	1105	10,60	1,73	1,73	1,73	2,17	3,04	10,40 (3,40 - 14,50)	4,81	**4,68 A++**	2,16 (0,48 - 3,64)	1080	10,20
20+20+20+25+42	1,42	1,42	1,42	1,77	2,97	9,00 (2,90 - 11,50)	4,07	**8,50 A+++**	2,21 (0,49 - 3,41)	1105	10,60	1,64	1,64	1,64	2,05	3,43	10,40 (3,40 - 14,50)	4,81	**4,68 A++**	2,16 (0,49 - 3,63)	1080	10,20
20+20+20+25+50	1,33	1,33	1,33	1,67	3,34	9,00 (2,90 - 11,50)	4,15	**8,50 A+++**	2,17 (0,54 - 3,28)	1085	10,40	1,54	1,54	1,54	1,93	3,85	10,40 (3,40 - 14,50)	4,73	**4,68 A++**	2,20 (0,58 - 3,63)	1100	10,30
20+20+20+25+60	1,24	1,24	1,24	1,55	3,73	9,00 (2,90 - 11,50)	4,15	**8,50 A+++**	2,17 (0,54 - 3,28)	1085	10,40	1,43	1,43	1,43	1,79	4,32	10,40 (3,40 - 14,50)	4,73	**4,68 A++**	2,20 (0,58 - 3,63)	1100	10,30
20+20+20+25+71	1,15	1,15	1,15	1,44	4,11	9,00 (2,90 - 11,50)	4,15	**8,50 A+++**	2,17 (0,57 - 3,28)	1085	10,40	1,33	1,33	1,33	1,67	4,74	10,40 (3,40 - 14,50)	4,75	**4,68 A++**	2,19 (0,59 - 3,61)	1095	10,30
20+20+20+35+35	1,38	1,38	1,38	2,43	2,43	9,00 (2,90 - 11,50)	4,07	**8,50 A+++**	2,21 (0,49 - 3,42)	1105	10,60	1,60	1,60	1,60	2,80	2,80	10,40 (3,40 - 14,50)	4,84	**4,68 A++**	2,15 (0,51 - 3,61)	1075	10,10
20+20+20+35+42	1,31	1,31	1,31	2,30	2,77	9,00 (2,90 - 11,50)	4,07	**8,50 A+++**	2,21 (0,49 - 3,42)	1105	10,60	1,52	1,52	1,52	2,66	3,18	10,40 (3,40 - 14,50)	4,84	**4,68 A++**	2,15 (0,51 - 3,60)	1075	10,10
20+20+20+35+50	1,24	1,24	1,24	2,17	3,11	9,00 (2,90 - 11,50)	4,15	**8,50 A+++**	2,17 (0,57 - 3,28)	1085	10,40	1,43	1,43	1,43	2,51	3,60	10,40 (3,40 - 14,50)	4,66	**4,68 A++**	2,23 (0,60 - 3,60)	1115	10,50
20+20+20+35+60	1,16	1,16	1,16	2,03	3,49	9,00 (2,90 - 11,50)	4,15	**8,50 A+++**	2,17 (0,57 - 3,28)	1085	10,40	1,34	1,34	1,34	2,35	4,03	10,40 (3,40 - 14,50)	4,66	**4,68 A++**	2,23 (0,60 - 3,60)	1115	10,50
20+20+20+35+71	1,08	1,08	1,08	1,90	3,86	9,00 (2,90 - 11,50)	4,13	**8,50 A+++**	2,18 (0,58 - 3,29)	1090	10,40	1,25	1,25	1,25	2,19	4,46	10,40 (3,40 - 14,50)	4,66	**4,68 A++**	2,23 (0,62 - 3,59)	1115	10,50
20+20+20+42+42	1,25	1,25	1,25	2,62	2,62	8,99 (2,90 - 11,50)	4,18	**8,50 A+++**	2,15 (0,49 - 3,42)	1075	10,30	1,44	1,44	1,44	3,04	3,04	10,40 (3,40 - 14,50)	4,77	**4,68 A++**	2,18 (0,52 - 3,59)	1090	10,20
20+20+20+42+50	1,18	1,18	1,18	2,49	2,97	9,00 (2,90 - 11,50)	4,15	**8,50 A+++**	2,17 (0,57 - 3,28)	1085	10,40	1,37	1,37	1,37	2,87	3,42	10,40 (3,40 - 14,50)	4,66	**4,68 A++**	2,23 (0,61 - 3,59)	1115	10,50
20+20+20+42+60	1,11	1,11	1,11	2,33	3,34	9,00 (2,90 - 11,50)	4,15	**8,50 A+++**	2,17 (0,57 - 3,28)	1085	10,40	1,28	1,28	1,28	2,70	3,86	10,40 (3,40 - 14,50)	4,66	**4,68 A++**	2,23 (0,61 - 3,59)	1115	10,50
20+20+20+42+71	1,04	1,04	1,04	2,18	3,70	9,00 (2,90 - 11,50)	4,13	**8,50 A+++**	2,18 (0,58 - 3,29)	1090	10,40	1,20	1,20	1,20	2,52	4,28	10,40 (3,40 - 14,50)	4,66	**4,68 A++**	2,23 (0,63 - 3,63)	1115	10,50
20+20+20+50+50	1,13	1,13	1,13	2,80	2,80	8,99 (2,90 - 11,50)	3,98	**8,50 A+++**	2,26 (0,66 - 3,23)	1130	10,80	1,30	1,30	1,30	3,25	3,25	10,40 (3,40 - 14,50)	4,46	**4,68 A++**	2,33 (0,72 - 3,66)	1165	10,90
20+20+20+50+60	1,06	1,06	1,06	2,65	3,17	9,00 (2,90 - 11,50)	3,98	**8,50 A+++**	2,26 (0,66 - 3,23)	1130	10,80	1,22	1,22	1,22	3,06	3,68	10,40 (3,40 - 14,50)	4,46	**4,68 A++**	2,33 (0,72 - 3,66)	1165	10,90
20+20+20+50+71	0,99	0,99	0,99	2,49	3,54	9,00 (2,90 - 11,50)	3,96	**8,50 A+++**	2,27 (0,67 - 3,24)	1135	10,90	1,15	1,15	1,15	2,87	4,08	10,40 (3,40 - 14,50)	4,46	**4,68 A++**	2,33 (0,74 - 3,65)	1165	10,90
20+20+20+60+60	1,00	1,00	1,00	3,00	3,00	9,00 (2,90 - 11,50)	3,98	**8,50 A+++**	2,26 (0,66 - 3,23)	1130	10,80	1,16	1,16	1,16	3,46	3,46	10,40 (3,40 - 14,50)	4,46	**4,68 A++**	2,33 (0,72 - 3,66)	1165	10,90
20+20+25+25+25	1,56	1,56	1,96	1,96	1,96	9,00 (2,90 - 11,50)	4,09	**8,50 A+++**	2,20 (0,48 - 3,49)	1100	10,50	1,81	1,81	2,26	2,26	2,26	10,40 (3,40 - 14,50)	4,88	**4,68 A++**	2,13 (0,46 - 3,67)	1065	10,00
20+20+25+25+35	1,44	1,44	1,80	1,80	2,52	9,00 (2,90 - 11,50)	4,07	**8,50 A+++**	2,21 (0,48 - 3,41)	1105	10,60	1,66	1,66	2,08	2,08	2,92	10,40 (3,40 - 14,50)	4,81	**4,68 A++**	2,16 (0,48 - 3,64)	1080	10,20
20+20+25+25+42	1,36	1,36	1,70	1,70	2,88	9,00 (2,90 - 11,50)	4,07	**8,50 A+++**	2,21 (0,49 - 3,41)	1105	10,60	1,58	1,58	1,97	1,97	3,30	10,40 (3,40 - 14,50)	4,81	**4,68 A++**	2,16 (0,49 - 3,63)	1080	10,20
20+20+25+25+50	1,29	1,29	1,61	1,61	3,20	9,00 (2,90 - 11,50)	4,15	**8,50 A+++**	2,17 (0,54 - 3,28)	1085	10,40	1,49	1,49	1,86	1,86	3,70	10,40 (3,40 - 14,50)	4,73	**4,68 A++**	2,20 (0,58 - 3,63)	1100	10,30
20+20+25+25+60	1,20	1,20	1,50	1,50	3,60	9,00 (2,90 - 11,50)	4,15	**8,50 A+++**	2,17 (0,54 - 3,28)	1085	10,40	1,39	1,39	1,73	1,73	4,16	10,40 (3,40 - 14,50)	4,73	**4,68 A++**	2,20 (0,58 - 3,63)	1100	10,30
20+20+25+25+71	1,12	1,12	1,40	1,40	3,96	9,00 (2,90 - 11,50)	4,15	**8,50 A+++**	2,17 (0,57 - 3,28)	1085	10,40	1,29	1,29	1,61	1,61	4,60	10,40 (3,40 - 14,50)	4,75	**4,68 A++**	2,19 (0,59 - 3,61)	1095	10,30
20+20+25+35+35	1,33	1,33	1,68	2,33	2,33	9,00 (2,90 - 11,50)	4,07	**8,50 A+++**	2,21 (0,49 - 3,42)	1105	10,60	1,54	1,54	1,92	2,70	2,70	10,40 (3,40 - 14,50)	4,84	**4,68 A++**	2,15 (0,51 - 3,61)	1075	10,10
20+20+25+35+42	1,27	1,27	1,58	2,22	2,66	9,00 (2,90 - 11,50)	4,07	**8,50 A+++**	2,21 (0,49 - 3,42)	1105	10,60	1,46	1,46	1,83	2,56	3,09	10,40 (3,40 - 14,50)	4,84	**4,68 A++**	2,15 (0,51 - 3,60)	1075	10,10
20+20+25+35+50	1,20	1,20	1,50	2,10	3,00	9,00 (2,90 - 11,50)	4,15	**8,50 A+++**	2,17 (0,57 - 3,28)	1085	10,40	1,39	1,39	1,73	2,43	3,46	10,40 (3,40 - 14,50)	4,66	**4,68 A++**	2,23 (0,60 - 3,60)	1115	10,50
20+20+25+35+60	1,13	1,13	1,41	1,97	3,36	9,00 (2,90 - 11,50)	4,15	**8,50 A+++**	2,17 (0,57 - 3,28)	1085	10,40	1,30	1,30	1,63	2,28	3,89	10,40 (3,40 - 14,50)	4,66	**4,68 A++**	2,23 (0,60 - 3,60)	1115	10,50
20+20+25+35+71	1,05	1,05	1,32	1,84	3,74	9,00 (2,90 - 11,50)	4,13	**8,50 A+++**	2,18 (0,58 - 3,29)	1090	10,40	1,22	1,22	1,52	2,13	4,31	10,40 (3,40 - 14,50)	4,66	**4,68 A++**	2,23 (0,62 - 3,59)	1115	10,50
20+20+25+42+42	1,21	1,21	1,50	2,54	2,54	9,00 (2,90 - 11,50)	4,07	**8,50 A+++**	2,21 (0,49 - 3,42)	1105	10,60	1,40	1,40	1,74	2,93	2,93	10,40 (3,40 - 14,50)	4,77	**4,68 A++**	2,18 (0,52 - 3,59)	1090	10,20
20+20+25+42+50	1,15	1,15	1,43	2,41	2,86	9,00 (2,90 - 11,50)	4,15	**8,50 A+++**	2,17 (0,57 - 3,28)	1085	10,40	1,32	1,32	1,66	2,78	3,32	10,40 (3,40 - 14,50)	4,66	**4,68 A++**	2,23 (0,61 - 3,59)	1115	10,50
20+20+25+42+60	1,08	1,08	1,35	2,26	3,23	9,00 (2,90 - 11,50)	4,15	**8,50 A+++**	2,17 (0,57 - 3,28)	1085	10,40	1,25	1,25	1,56	2,62	3,72	10,40 (3,40 - 14,50)	4,66	**4,68 A++**	2,23 (0,61 - 3,59)	1115	10,50
20+20+25+42+71	1,01	1,01	1,26	2,12	3,60	9,00 (2,90 - 11,50)	4,13	**8,50 A+++**	2,18 (0,58 - 3,29)	1090	10,40	1,17	1,17	1,46	2,45	4,15	10,40 (3,40 - 14,50)	4,66	**4,68 A++**	2,23 (0,63 - 3,63)	1115	10,50
20+20+25+50+50	1,09	1,09	1,36	2,73	2,73	9,00 (2,90 - 11,50)	3,98	**8,50 A+++**	2,26 (0,66 - 3,23)	1130	10,80	1,26	1,26	1,58	3,15	3,15	10,40 (3,40 - 14,50)	4,46	**4,68 A++**	2,33 (0,72 - 3,66)	1165	10,90
20+20+25+50+60	1,03	1,03	1,29	2,57	3,08	9,00 (2,90 - 11,50)	3,98	**8,50 A+++**	2,26 (0,66 - 3,23)	1130	10,80	1,19	1,19	1,49	2,97	3,56	10,40 (3,40 - 14,50)	4,46	**4,68 A++**	2,33 (0,72 - 3,66)	1165	10,90
20+20+35+35+35	1,24	1,24	2,17	2,17	2,17	8,99 (2,90 - 11,50)	4,18	**8,50 A+++**	2,15 (0,49 - 3,34)	1075	10,30	1,43	1,43	2,51	2,51	2,51	10,39 (3,40 - 14,50)	4,77	**4,68 A++**	2,18 (0,52 - 3,64)	1090	10,20
20+20+35+35+42	1,18	1,18	2,07	2,07	2,50	9,00 (2,90 - 11,50)	4,19	**8,50 A+++**	2,15 (0,50 - 3,34)	1075	10,30	1,37	1,37	2,39	2,39	2,88	10,40 (3,40 - 14,50)	4,77	**4,68 A++**	2,18 (0,53 - 3,63)	1090	10,20
20+20+35+35+50	1,13	1,13	1,97	1,97	2,80	9,00 (2,90 - 11,50)	4,13	**8,50 A+++**	2,18 (0,58 - 3,29)	1090	10,40	1,30	1,30	2,28	2,28	3,24	10,40 (3,40 - 14,50)	4,66	**4,68 A++**	2,23 (0,63 - 3,63)	1115	10,50
20+20+35+35+60	1,06	1,06	1,85	1,85	3,18	9,00 (2,90 - 11,50)	4,13	**8,50 A+++**	2,18 (0,58 - 3,29)	1090	10,40	1,22	1,22	2,14	2,14	3,68	10,40 (3,40 - 14,50)	4,66	**4,68 A++**	2,23 (0,63 - 3,63)	1115	10,50
20+20+35+35+71	0,99	0,99	1,74	1,74	3,54	9,00 (2,90 - 11,50)	4,13	**8,50 A+++**	2,18 (0,61 - 3,29)	1090	10,40	1,15	1,15	2,01	2,01	4,08	10,40 (3,40 - 14,50)	4,60	**4,68 A++**	2,26 (0,64 - 3,62)	1130	10,60
20+20+35+42+42	1,13	1,13	1,98	2,38	2,38	9,00 (2,90 - 11,50)	4,19	**8,50 A+++**	2,15 (0,52 - 3,35)	1075	10,30	1,31	1,31	2,28	2,75	2,75	10,40 (3,40 - 14,50)	4,79	**4,68 A++**	2,17 (0,54 - 3,62)	1085	10,20
20+20+35+42+50	1,08	1,08	1,89	2,26	2,69	9,00 (2,90 - 11,50)	4,13	**8,50 A+++**	2,18 (0,58 - 3,29)	1090	10,40	1,25	1,25	2,18	2,62	3,10	10,40 (3,40 - 14,50)	4,60	**4,68 A++**	2,26 (0,63 - 3,62)	1130	10,60
20+20+35+42+60	1,02	1,02	1,78	2,14	3,04	9,00 (2,90 - 11,50)	4,13	**8,50 A+++**	2,18 (0,58 - 3,29)	1090	10,40	1,18	1,18	2,06	2,47	3,51	10,40 (3,40 - 14,50)	4,60	**4,68 A++**	2,26 (0,63 - 3,62)	1130	10,60
20+20+35+50+50	1,03	1,03	1,80	2,57	2,57	9,00 (2,90 - 11,50)	3,96	**8,50 A+++**	2,27 (0,67 - 3,24)	1135	10,90	1,19	1,19	2,08	2,97	2,97	10,40 (3,40 - 14,50)	4,41	**4,68 A++**	2,36 (0,75 - 3,64)	1180	11,10
20+20+42+42+42	1,08	1,08	2,28	2,28	2,28	9,00 (2,90 - 11,50)	4,19	**8,50 A+++**	2,15 (0,52 - 3,35)	1075	10,30	1,25	1,25	2,63	2,63	2,63	10,39 (3,40 - 14,50)	4,79	**4,68 A++**	2,17 (0,54 - 3,61)	1085	10,20
20+20+42+42+50	1,03	1,03	2,17	2,17	2,60	9,00 (2,90 - 11,50)	4,13	**8,50 A+++**	2,18 (0,58 - 3,29)	1090	10,40	1,20	1,20	2,51	2,51	2,98	10,40 (3,40 - 14,50)	4,60	**4,68 A++**	2,26 (0,65 - 3,61)	1130	10,60
20+20+42+50+50	0,99	0,99	2,08	2,47	2,47	9,00 (2,90 - 11,50)	3,96	**8,50 A+++**	2,27 (0,67 - 3,24)	1135	10,90	1,14	1,14	2,40	2,86	2,86	10,40 (3,40 - 14,50)	4,39	**4,68 A++**	2,37 (0,75 - 3,69)	1185	11,10

Free Multi 5x1 CU-5Z90TBE. Minimum capacity connected: 4,5 kW. Maximum capacity connected: 18,3 kW • R32 refrigerant

Indoor unit capacity	Cooling capacity (kW). Rooms						EER	SEER [1]	Input power rating	A.E.C.	Current	Heating capacity (kW). Rooms						COP	SCOP [1]	Input power rating	A.E.C.	Current
	A	B	C	D	E	Total (Min - Max)	W/W		kW	kWh	230V	A	B	C	D	E	Total (Min - Max)	W/W		kW	kWh	230V
20+25+25+25+25	1,48	1,88	1,88	1,88	1,88	9,00 (2,90 - 11,50)	4,09	**8,50 A+++**	2,20 (0,48 - 3,49)	1100	10,50	1,72	2,17	2,17	2,17	2,17	10,40 (3,40 - 14,50)	4,88	**4,68 A++**	2,13 (0,46 - 3,67)	1065	10,00
20+25+25+25+35	1,38	1,73	1,73	1,73	2,43	9,00 (2,90 - 11,50)	4,07	**8,50 A+++**	2,21 (0,48 - 3,41)	1105	10,60	1,60	2,00	2,00	2,00	2,80	10,40 (3,40 - 14,50)	4,81	**4,68 A++**	2,16 (0,48 - 3,64)	1080	10,20
20+25+25+25+42	1,31	1,64	1,64	1,64	2,77	9,00 (2,90 - 11,50)	4,07	**8,50 A+++**	2,21 (0,49 - 3,41)	1105	10,60	1,52	1,90	1,90	1,90	3,18	10,40 (3,40 - 14,50)	4,81	**4,68 A++**	2,16 (0,49 - 3,63)	1080	10,20
20+25+25+25+50	1,24	1,55	1,55	1,55	3,11	9,00 (2,90 - 11,50)	4,15	**8,50 A+++**	2,17 (0,54 - 3,28)	1085	10,40	1,43	1,79	1,79	1,79	3,60	10,40 (3,40 - 14,50)	4,73	**4,68 A++**	2,20 (0,58 - 3,63)	1100	10,30
20+25+25+25+60	1,16	1,45	1,45	1,45	3,49	9,00 (2,90 - 11,50)	4,15	**8,50 A+++**	2,17 (0,54 - 3,28)	1085	10,40	1,34	1,68	1,68	1,68	4,02	10,40 (3,40 - 14,50)	4,73	**4,68 A++**	2,20 (0,58 - 3,63)	1100	10,30
20+25+25+25+71	1,08	1,36	1,36	1,36	3,84	9,00 (2,90 - 11,50)	4,15	**8,50 A+++**	2,17 (0,57 - 3,28)	1085	10,40	1,25	1,57	1,57	1,57	4,44	10,40 (3,40 - 14,50)	4,75	**4,68 A++**	2,19 (0,59 - 3,61)	1095	10,30
20+25+25+35+35	1,28	1,61	1,61	2,25	2,25	9,00 (2,90 - 11,50)	4,07	**8,50 A+++**	2,21 (0,49 - 3,42)	1105	10,60	1,48	1,86	1,86	2,60	2,60	10,40 (3,40 - 14,50)	4,84	**4,68 A++**	2,15 (0,51 - 3,61)	1075	10,10
20+25+25+35+42	1,22	1,53	1,53	2,14	2,58	9,00 (2,90 - 11,50)	4,07	**8,50 A+++**	2,21 (0,49 - 3,42)	1105	10,60	1,41	1,77	1,77	2,48	2,97	10,40 (3,40 - 14,50)	4,84	**4,68 A++**	2,15 (0,51 - 3,60)	1075	10,10
20+25+25+35+50	1,16	1,45	1,45	2,03	2,91	9,00 (2,90 - 11,50)	4,15	**8,50 A+++**	2,17 (0,57 - 3,28)	1085	10,40	1,34	1,68	1,68	2,35	3,35	10,40 (3,40 - 14,50)	4,66	**4,68 A++**	2,23 (0,60 - 3,60)	1115	10,50
20+25+25+35+60	1,09	1,36	1,36	1,91	3,28	9,00 (2,90 - 11,50)	4,15	**8,50 A+++**	2,17 (0,57 - 3,28)	1085	10,40	1,26	1,58	1,58	2,21	3,77	10,40 (3,40 - 14,50)	4,66	**4,68 A++**	2,23 (0,60 - 3,60)	1115	10,50
20+25+25+35+71	1,02	1,28	1,28	1,79	3,63	9,00 (2,90 - 11,50)	4,13	**8,50 A+++**	2,18 (0,58 - 3,29)	1090	10,40	1,18	1,48	1,48	2,07	4,19	10,40 (3,40 - 14,50)	4,66	**4,68 A++**	2,23 (0,62 - 3,59)	1115	10,50
20+25+25+42+42	1,18	1,46	1,46	2,45	2,45	9,00 (2,90 - 11,50)	4,07	**8,50 A+++**	2,21 (0,49 - 3,42)	1105	10,60	1,34	1,69	1,69	2,84	2,84	10,40 (3,40 - 14,50)	4,77	**4,68 A++**	2,18 (0,52 - 3,59)	1090	10,20
20+25+25+42+50	1,11	1,39	1,39	2,33	2,78	9,00 (2,90 - 11,50)	4,15	**8,50 A+++**	2,17 (0,57 - 3,28)	1085	10,40	1,28	1,60	1,60	2,70	3,22	10,40 (3,40 - 14,50)	4,66	**4,68 A++**	2,23 (0,61 - 3,59)	1115	10,50
20+25+25+42+60	1,05	1,31	1,31	2,20	3,13	9,00 (2,90 - 11,50)	4,15	**8,50 A+++**	2,17 (0,57 - 3,28)	1085	10,40	1,21	1,51	1,51	2,54	3,63	10,40 (3,40 - 14,50)	4,66	**4,68 A++**	2,23 (0,61 - 3,59)	1115	10,50
20+25+25+42+71	0,98	1,23	1,23	2,07	3,49	9,00 (2,90 - 11,50)	4,13	**8,50 A+++**	2,18 (0,58 - 3,29)	1090	10,40	1,14	1,42	1,42	2,39	4,03	10,40 (3,40 - 14,50)	4,66	**4,68 A++**	2,23 (0,63 - 3,63)	1115	10,50
20+25+25+50+50	1,06	1,32	1,32	2,65	2,65	9,00 (2,90 - 11,50)	3,98	**8,50 A+++**	2,26 (0,66 - 3,23)	1130	10,80	1,22	1,53	1,53	3,06	3,06	10,40 (3,40 - 14,50)	4,46	**4,68 A++**	2,33 (0,72 - 3,66)	1165	10,90
20+25+25+50+60	1,00	1,25	1,25	2,50	3,00	9,00 (2,90 - 11,50)	3,98	**8,50 A+++**	2,26 (0,66 - 3,23)	1130	10,80	1,16	1,44	1,44	2,89	3,47	10,40 (3,40 - 14,50)	4,46	**4,68 A++**	2,33 (0,72 - 3,66)	1165	10,90
20+25+35+35+35	1,20	1,50	2,10	2,10	2,10	9,00 (2,90 - 11,50)	4,19	**8,50 A+++**	2,15 (0,49 - 3,34)	1075	10,30	1,38	1,73	2,43	2,43	2,43	10,40 (3,40 - 14,50)	4,77	**4,68 A++**	2,18 (0,52 - 3,64)	1090	10,20
20+25+35+35+42	1,15	1,43	2,01	2,01	2,40	9,00 (2,90 - 11,50)	4,19	**8,50 A+++**	2,15 (0,50 - 3,34)	1075	10,30	1,32	1,66	2,32	2,32	2,78	10,40 (3,40 - 14,50)	4,77	**4,68 A++**	2,18 (0,53 - 3,63)	1090	10,20
20+25+35+35+50	1,09	1,36	1,91	1,91	2,73	9,00 (2,90 - 11,50)	4,13	**8,50 A+++**	2,18 (0,58 - 3,29)	1090	10,40	1,26	1,58	2,21	2,21	3,14	10,40 (3,40 - 14,50)	4,66	**4,68 A++**	2,23 (0,63 - 3,63)	1115	10,50
20+25+35+35+60	1,03	1,29	1,80	1,80	3,08	9,00 (2,90 - 11,50)	4,13	**8,50 A+++**	2,18 (0,58 - 3,29)	1090	10,40	1,19	1,49	2,08	2,08	3,56	10,40 (3,40 - 14,50)	4,66	**4,68 A++**	2,23 (0,63 - 3,63)	1115	10,50
20+25+35+42+42	1,10	1,37	1,93	2,30	2,30	9,00 (2,90 - 11,50)	4,19	**8,50 A+++**	2,15 (0,52 - 3,35)	1075	10,30	1,27	1,59	2,22	2,66	2,66	10,40 (3,40 - 14,50)	4,79	**4,68 A++**	2,17 (0,54 - 3,62)	1085	10,20
20+25+35+42+50	1,05	1,31	1,83	2,20	2,61	9,00 (2,90 - 11,50)	4,13	**8,50 A+++**	2,18 (0,58 - 3,29)	1090	10,40	1,21	1,51	2,12	2,54	3,02	10,40 (3,40 - 14,50)	4,60	**4,68 A++**	2,26 (0,63 - 3,62)	1130	10,60
20+25+35+42+60	0,99	1,24	1,73	2,08	2,96	9,00 (2,90 - 11,50)	4,13	**8,50 A+++**	2,18 (0,58 - 3,29)	1090	10,40	1,14	1,43	2,00	2,40	3,43	10,40 (3,40 - 14,50)	4,60	**4,68 A++**	2,26 (0,63 - 3,62)	1130	10,60
20+25+35+50+50	1,00	1,25	1,75	2,50	2,50	9,00 (2,90 - 11,50)	3,96	**8,50 A+++**	2,27 (0,67 - 3,24)	1135	10,90	1,16	1,44	2,02	2,89	2,89	10,40 (3,40 - 14,50)	4,41	**4,68 A++**	2,36 (0,75 - 3,64)	1180	11,10
20+25+42+42+42	1,05	1,32	2,21	2,21	2,21	9,00 (2,90 - 11,50)	4,19	**8,50 A+++**	2,15 (0,52 - 3,35)	1075	10,30	1,23	1,52	2,55	2,55	2,55	10,40 (3,40 - 14,50)	4,79	**4,68 A++**	2,17 (0,54 - 3,61)	1085	10,20
20+25+42+42+50	1,01	1,26	2,11	2,11	2,51	9,00 (2,90 - 11,50)	4,13	**8,50 A+++**	2,18 (0,58 - 3,29)	1090	10,40	1,16	1,45	2,44	2,44	2,91	10,40 (3,40 - 14,50)	4,60	**4,68 A++**	2,26 (0,65 - 3,61)	1130	10,60
20+35+35+35+35	1,12	1,97	1,97	1,97	1,97	9,00 (2,90 - 11,50)	4,17	**8,50 A+++**	2,16 (0,53 - 3,35)	1080	10,30	1,28	2,28	2,28	2,28	2,28	10,40 (3,40 - 14,50)	4,79	**4,68 A++**	2,17 (0,54 - 3,61)	1085	10,20
20+35+35+35+42	1,08	1,89	1,89	1,89	2,25	9,00 (2,90 - 11,50)	4,17	**8,50 A+++**	2,16 (0,53 - 3,35)	1080	10,30	1,25	2,18	2,18	2,18	2,61	10,40 (3,40 - 14,50)	4,79	**4,68 A++**	2,17 (0,55 - 3,60)	1085	10,20
20+35+35+35+50	1,03	1,80	1,80	1,80	2,57	9,00 (2,90 - 11,50)	4,13	**8,50 A+++**	2,18 (0,58 - 3,29)	1090	10,40	1,19	2,08	2,08	2,08	2,97	10,40 (3,40 - 14,50)	4,60	**4,68 A++**	2,26 (0,65 - 3,61)	1130	10,60
20+35+35+42+42	1,04	1,81	1,81	2,17	2,17	9,00 (2,90 - 11,50)	4,17	**8,50 A+++**	2,16 (0,53 - 3,35)	1080	10,30	1,20	2,09	2,09	2,51	2,51	10,40 (3,40 - 14,50)	4,73	**4,68 A++**	2,20 (0,56 - 3,59)	1100	10,30
20+35+35+42+50	0,99	1,73	1,73	2,08	2,47	9,00 (2,90 - 11,50)	4,13	**8,50 A+++**	2,18 (0,58 - 3,29)	1090	10,40	1,14	2,00	2,00	2,40	2,86	10,40 (3,40 - 14,50)	4,60	**4,68 A++**	2,26 (0,66 - 3,60)	1130	10,60
20+35+42+42+42	0,99	1,74	2,09	2,09	2,09	9,00 (2,90 - 11,50)	4,17	**8,50 A+++**	2,16 (0,53 - 3,35)	1080	10,30	1,15	2,02	2,41	2,41	2,41	10,40 (3,40 - 14,50)	4,73	**4,68 A++**	2,20 (0,57 - 3,58)	1100	10,30
25+25+25+25+25	1,80	1,80	1,80	1,80	1,80	9,00 (2,90 - 11,50)	4,09	**8,50 A+++**	2,20 (0,48 - 3,49)	1100	10,50	2,08	2,08	2,08	2,08	2,08	10,40 (3,40 - 14,50)	4,88	**4,68 A++**	2,13 (0,46 - 3,67)	1065	10,00
25+25+25+25+35	1,67	1,67	1,67	1,67	2,32	9,00 (2,90 - 11,50)	4,07	**8,50 A+++**	2,21 (0,48 - 3,41)	1105	10,60	1,93	1,93	1,93	1,93	2,68	10,40 (3,40 - 14,50)	4,81	**4,68 A++**	2,16 (0,48 - 3,64)	1080	10,20
25+25+25+25+42	1,58	1,58	1,58	1,58	2,68	9,00 (2,90 - 11,50)	4,07	**8,50 A+++**	2,21 (0,49 - 3,41)	1105	10,60	1,83	1,83	1,83	1,83	3,08	10,40 (3,40 - 14,50)	4,81	**4,68 A++**	2,16 (0,49 - 3,63)	1080	10,20
25+25+25+25+50	1,50	1,50	1,50	1,50	3,00	9,00 (2,90 - 11,50)	4,15	**8,50 A+++**	2,17 (0,54 - 3,28)	1085	10,40	1,73	1,73	1,73	1,73	3,48	10,40 (3,40 - 14,50)	4,73	**4,68 A++**	2,20 (0,58 - 3,63)	1100	10,30
25+25+25+25+60	1,41	1,41	1,41	1,41	3,36	9,00 (2,90 - 11,50)	4,15	**8,50 A+++**	2,17 (0,54 - 3,28)	1085	10,40	1,63	1,63	1,63	1,63	3,88	10,40 (3,40 - 14,50)	4,73	**4,68 A++**	2,20 (0,58 - 3,63)	1100	10,30
25+25+25+25+71	1,32	1,32	1,32	1,32	3,72	9,00 (2,90 - 11,50)	4,15	**8,50 A+++**	2,17 (0,57 - 3,28)	1085	10,40	1,52	1,52	1,52	1,52	4,32	10,40 (3,40 - 14,50)	4,75	**4,68 A++**	2,19 (0,59 - 3,61)	1095	10,30
25+25+25+35+35	1,55	1,55	1,55	2,17	2,17	8,99 (2,90 - 11,50)	4,07	**8,50 A+++**	2,21 (0,49 - 3,42)	1105	10,60	1,79	1,79	1,79	2,51	2,51	10,39 (3,40 - 14,50)	4,83	**4,68 A++**	2,15 (0,51 - 3,61)	1075	10,10
25+25+25+35+42	1,48	1,48	1,48	2,07	2,49	9,00 (2,90 - 11,50)	4,07	**8,50 A+++**	2,21 (0,49 - 3,42)	1105	10,60	1,71	1,71	1,71	2,39	2,88	10,40 (3,40 - 14,50)	4,84	**4,68 A++**	2,15 (0,51 - 3,60)	1075	10,10
25+25+25+35+50	1,41	1,41	1,41	1,97	2,80	9,00 (2,90 - 11,50)	4,15	**8,50 A+++**	2,17 (0,57 - 3,28)	1085	10,40	1,63	1,63	1,63	2,28	3,23	10,40 (3,40 - 14,50)	4,66	**4,68 A++**	2,23 (0,60 - 3,60)	1115	10,50
25+25+25+35+60	1,32	1,32	1,32	1,85	3,19	9,00 (2,90 - 11,50)	4,15	**8,50 A+++**	2,17 (0,57 - 3,28)	1085	10,40	1,53	1,53	1,53	2,14	3,67	10,40 (3,40 - 14,50)	4,66	**4,68 A++**	2,23 (0,60 - 3,60)	1115	10,50
25+25+25+35+71	1,24	1,24	1,24	1,74	3,54	9,00 (2,90 - 11,50)	4,13	**8,50 A+++**	2,18 (0,58 - 3,29)	1090	10,40	1,44	1,44	1,44	2,01	4,07	10,40 (3,40 - 14,50)	4,66	**4,68 A++**	2,23 (0,62 - 3,59)	1115	10,50
25+25+25+42+42	1,42	1,42	1,42	2,37	2,37	9,00 (2,90 - 11,50)	4,07	**8,50 A+++**	2,21 (0,49 - 3,42)	1105	10,60	1,64	1,64	1,64	2,74	2,74	10,40 (3,40 - 14,50)	4,77	**4,68 A++**	2,18 (0,52 - 3,59)	1090	10,20
25+25+25+42+50	1,35	1,35	1,35	2,26	2,69	9,00 (2,90 - 11,50)	4,15	**8,50 A+++**	2,17 (0,57 - 3,28)	1085	10,40	1,56	1,56	1,56	2,62	3,10	10,40 (3,40 - 14,50)	4,66	**4,68 A++**	2,23 (0,61 - 3,59)	1115	10,50
25+25+25+42+60	1,27	1,27	1,27	2,14	3,05	9,00 (2,90 - 11,50)	4,15	**8,50 A+++**	2,17 (0,57 - 3,28)	1085	10,40	1,47	1,47	1,47	2,47	3,52	10,40 (3,40 - 14,50)	4,66	**4,68 A++**	2,23 (0,61 - 3,59)	1115	10,50
25+25+25+50+50	1,29	1,29	1,29	2,56	2,56	8,99 (2,90 - 11,50)	3,98	**8,50 A+++**	2,26 (0,66 - 3,23)	1130	10,80	1,49	1,49	1,49	2,96	2,96	10,39 (3,40 - 14,50)	4,46	**4,68 A++**	2,33 (0,72 - 3,66)	1165	10,90
25+25+35+35+35	1,45	1,45	2,03	2,03	2,03	8,99 (2,90 - 11,50)	4,18	**8,50 A+++**	2,15 (0,49 - 3,34)	1075	10,30	1,67	1,67	2,35	2,35	2,35	10,39 (3,40 - 14,50)	4,77	**4,68 A++**	2,18 (0,52 - 3,64)	1090	10,20
25+25+35+35+42	1,39	1,39	1,94	1,94	2,34	9,00 (2,90 - 11,50)	4,19	**8,50 A+++**	2,15 (0,50 - 3,34)	1075	10,30	1,60	1,60	2,25	2,25	2,70	10,40 (3,40 - 14,50)	4,77	**4,68 A++**	2,18 (0,53 - 3,63)	1090	10,20
25+25+35+35+50	1,32	1,32	1,85	1,85	2,66	9,00 (2,90 - 11,50)	4,13	**8,50 A+++**	2,18 (0,58 - 3,29)	1090	10,40	1,53	1,53	2,14	2,14	3,06	10,40 (3,40 - 14,50)	4,66	**4,68 A++**	2,23 (0,63 - 3,63)	1115	10,50
25+25+35+35+60	1,25	1,25	1,75	1,75	3,00	9,00 (2,90 - 11,50)	4,13	**8,50 A+++**	2,18 (0,58 - 3,29)	1090	10,40	1,44	1,44	2,02	2,02	3,48	10,40 (3,40 - 14,50)	4,66	**4,68 A++**	2,23 (0,63 - 3,63)	1115	10,50
25+25+35+42+42	1,33	1,33	1,86	2,24	2,24	9,00 (2,90 - 11,50)	4,19	**8,50 A+++**	2,15 (0,52 - 3,35)	1075	10,30	1,54	1,54	2,16	2,58	2,58	10,40 (3,40 - 14,50)	4,79	**4,68 A++**	2,17 (0,54 - 3,62)	1085	10,20
25+25+35+42+50	1,27	1,27	1,78	2,14	2,54	9,00 (2,90 - 11,50)	4,13	**8,50 A+++**	2,18 (0,58 - 3,29)	1090	10,40	1,47	1,47	2,06	2,47	2,93	10,40 (3,40 - 14,50)	4,60	**4,68 A++**	2,26 (0,63 - 3,62)	1130	10,60
25+25+42+42+42	1,27	1,27	2,15	2,15	2,15	8,99 (2,90 - 11,50)	4,18	**8,50 A+++**	2,15 (0,52 - 3,35)	1075	10,30	1,48	1,48	2,48	2,48	2,48	10,40 (3,40 - 14,50)	4,79	**4,68 A++**	2,17 (0,54 - 3,61)	1085	10,20
25+35+35+35+35	1,36	1,91	1,91	1,91	1,91	9,00 (2,90 - 11,50)	4,17	**8,50 A+++**	2,16 (0,53 - 3,35)	1080	10,30	1,56	2,21	2,21	2,21	2,21	10,40 (3,40 - 14,50)	4,79	**4,68 A++**	2,17 (0,54 - 3,61)	1085	10,20
25+35+35+35+42	1,31	1,83	1,83	1,83	2,20	9,00 (2,90 - 11,50)	4,17	**8,50 A+++**	2,16 (0,53 - 3,35)	1080	10,30	1,51	2,12	2,12	2,12	2,53	10,40 (3,40 - 14,50)	4,79	**4,68 A++**	2,17 (0,55 - 3,60)	1085	10,20
25+35+35+35+50	1,25	1,75	1,75	1,75	2,50	9,00 (2,90 - 11,50)	4,13	**8,50 A+++**	2,18 (0,58 - 3,29)	1090	10,40	1,44	2,02	2,02	2,02	2,90	10,40 (3,40 - 14,50)	4,60	**4,68 A++**	2,26 (0,65 - 3,61)	1130	10,60
25+35+35+42+42	1,26	1,76	1,76	2,11	2,11	9,00 (2,90 - 11,50)	4,17	**8,50 A+++**	2,16 (0,53 - 3,35)	1080	10,30	1,46	2,03	2,03	2,44	2,44	10,40 (3,40 - 14,50)	4,73	**4,68 A++**	2,20 (0,56 - 3,59)	1100	10,30
35+35+35+35+35	1,80	1,80	1,80	1,80	1,80	9,00 (2,90 - 11,50)	4,17	**8,50 A+++**	2,16 (0,53 - 3,35)	1080	10,30	2,08	2,08	2,08	2,08	2,08	10,40 (3,40 - 14,50)	4,73	**4,68 A++**	2,20 (0,57 - 3,58)	1100	10,30
35+35+35+35+42	1,73	1,73	1,73	1,73	2,08	9,00 (2,90 - 11,50)	4,17	**8,50 A+++**	2,16 (0,53 - 3,35)	1080	10,30	2,00	2,00	2,00	2,00	2,40	10,40 (3,40 - 14,50)	4,73	**4,68 A++**	2,20 (0,57 - 3,63)	1100	10,30

1) Energy Label Scale from A+++ to D.

Rating Conditions: Cooling Indoor 27°C DB / 19°C WB. Cooling Outdoor 35°C DB / 24°C WB. Heating Indoor 20°C DB. Heating Outdoor 7°C DB / 6°C WB. (DB: Dry Bulb; WB: Wet Bulb).
Specifications subject to change without notice. For detailed information about ErP / Energy Labelling, please visit our websites www.aircon.panasonic.eu or www.ptc.panasonic.eu.

Panasonic Commercial air to air

Here are some of your new air conditioner's major features.
Panasonic has developed an impressive range of highly efficient commercial air conditioners. This range confirms our commitment to the environment, with our highly efficient inverter compressor technology to optimise performance.

Highlighted Features

PACi: Commercial air to air. The compact and high efficiency solution for shops, restaurants, offices or residential applications.

Great savings and improved comfort. Panasonic has developed an impressive range of highly efficient Commercial air conditioners, with our highly efficient inverter compressor technology to optimise performance.
A wide range for industry, office or residential application. With configuration from 1:1 to 4:1, Panasonic can offer the most comfortable climate with solutions designed for every environment.
The diverse array of connectivity and control systems, allows you to manage your units from any various locations. Receive real-time status updates and maintenance alerts, while optimizing costs and energy usage.

Energy saving

R32 refrigerant.
Our heat pumps containing the refrigerant R32 show a drastic reduction in the value of Global Warming Potential (GWP). An important step to reduce greenhouse gases. R32 is also a component refrigerant, making it easy to recycle.

Econavi.
Intelligent Human Activity Sensor and Sunlight Sensor technologies that can detect and reduce waste energy, by optimising air conditioner operation according to room conditions. With just one touch of a button, you can save energy.

Exceptional seasonal cooling efficiency based on the ErP regulation.
Higher SEER ratings mean greater efficiency - year-round cooling savings!

Exceptional seasonal heating efficiency based on the ErP regulation.
Higher SCOP ratings mean greater efficiency - year-round heating savings!

Inverter Plus System.
Inverter Plus System classification highlights Panasonic's highest performing systems.

High efficiency compressor.
Compressors that operate with a wider Hz range realize a more efficient operation throughout the year. For Big PACi Series.

Better efficiency & value for low temperature applications.
On an energy efficiency scale from D to A+++, both the PACi water heat exchanger and the PRO HT provide A++ rated heating.

High performance

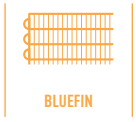

Bluefin.
Panasonic has extended the life of its condensers with an original anti-rust coating. For Big PACi Series.

Large fan.
Large fan provides larger airflow rate and very quiet operation at low speed. For Big PACi Series.

DC fan.
Safe and precise.

Down to -15 °C in cooling mode.
The air conditioner works in cooling mode when the outdoor temperature of -15 °C.

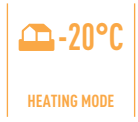

Down to -20 °C in heating mode.
All our commercial systems operate in heating to -15 °C, with models capable of up to -20 °C.

Up to 46 °C in cooling mode.
System works in cooling mode at outdoor temperature up to 46 °C.

nanoe™ X. Quality air for life.
Panasonic's latest innovation nanoe™ X promotes well-being by inhibiting growth of certain harmful viruses and bacteria, as well as deodorising your home.

R410A/R22 renewal.
The Panasonic renewal system allows good quality existing R410A or R22 pipe work to be re-used whilst installing new high efficiency R32 systems.

5 Years compressor warranty.
We guarantee the outdoor unit compressors in the entire range for five years.

High connectivity

Panasonic AC Smart Cloud.
The AC Smart Cloud from Panasonic allows you to have complete control of all your installations. In a simple click, receive status updates from all your units in real-time, preventing breakdowns and optimizing costs.

Internet control.
A next generation system providing user-friendly remote control of air conditioning or heat pump units from everywhere, using a simple Android™ or iOS smartphone, tablet or PC via the internet.

BMS connectivity.
The communication port can be integrated into the indoor unit and provides easy connection to, building management system, providing control of your Panasonic heat pump.

Advanced control.
A touch screen remote controller is included as a standard. Clean design, easy operation and quick access to all menus.

PACi outdoor units.
Energy saving concept

R32
NEW REFRIGERANT GAS
Panasonic

Product quality and safety. All Panasonic air conditioners undergo strict quality and safety tests before sale. This rigorous process includes obtaining all necessary safety approvals, to ensure that all air conditioners we sell are not only built to the highest market standards, but are also completely safe.

PACi R32 refrigerant gas

Panasonic recommends R32 because of its lower Global Warming Potential (GWP). Compared to R22 and R410A, R32 has a very low potential impact on global warming.

Panasonic is concerned with protecting and maintaining the environment. In line with the with European countries participating in the Montreal Protocol, protecting the ozone layer and preventing global warming, Panasonic is leading the switch to R32.

1 Installation innovation

- Extremely easy to install, practically the same as R410A. (Just remember to verify that the pressure gauge and vacuum pump are compatible with R32)
- This refrigerant is 100 % pure, which makes it easier to recycle and reuse

2 Environmental innovation

- Zero impact on the ozone layer
- 75 % less impact on global warming

3 Economic and energy consumption innovation

- Lower cost and greater savings
- Higher energy efficiency than R410A

PACi Elite: Next generation of commercial air conditioning

Outstanding performance at low temperatures, high energy efficiency, power consumption in remote control display. The structure and energy saving design of fans, fan motors, compressors and heat exchangers result in high COP value, which ranks as one of the highest class in the industry. Additional benefits include reduced CO_2 emissions, energy consumption and operating costs.

PACi Elite. From 3,6 to 25,0 kW.

- Meeting all necessary safety approvals to ensure quality and safety
- Top class SEER: A+++ / SCOP: A+++ at 3,6 kW (in 90x90 Cassette)
- Cooling operation is possible when outdoor temperature as high as 46 °C
- DC inverter technology combined with R32
- Cooling operation is possible when outdoor temperature is as low as -20 °C (for 10,0 kW ~ 14,0 kW with 30 m maximum pipe length)
- Heating operation is possible when outdoor temperature is as low as -20 °C
- Compact outdoor units
- Auto restart from outdoor unit
- Twin, Triple and Double-Twin connection possible

PACi Standard: For economy and value

With high quality design and engineering, the PACi Standard is the perfect solution for projects which demand quality on a limited budget. In addition, its compact and lightweight design makes it ideal for installations with limited space including small commercial and residential applications.
The outdoor unit is much more compact than the previous model. The slim and lightweight design means the PACi outdoor unit can be installed in a wide variety of locations.

PACi Standard. From 6,0 to 14,0 kW.

- Good balance of system cost vs energy efficiency
- Top class SEER/SCOP in the standard inverter category SEER: A++ / SCOP: A++ at 6,0 and 7,1 kW (in 90x90 Cassette)
- Interchangeable controller with ECOi
- Compact outdoor units
- Twin connection possible
- Cooling operation down to -10 °C and heating operation down to -15 °C

New wired remote controller CZ-RTC6 / CZ-RTC6BL

- Intuitive control with stylish design profile
- Compact body 86 x 86 mm
- Panasonic H&C Control App with Bluetooth® for daily remote control operation
- Quick and easy App set-up for system maintenance setting

Wired remote controller line-up	
CZ-RTC6	Non-wireless
CZ-RTC6BL	Bluetooth®

This series give you comfort and control, meeting the varying needs of multi users.

Accessible, flexible and convenient. Perfectly meeting modern control needs.

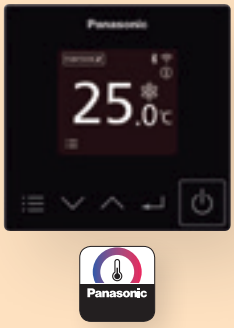

PACi Elite: Excellent SEER and SCOP values

High operating efficiency using DC inverter compressor, DC motor and a heat exchanger design.

PACi R32 seasonal efficiency for daily energy saving

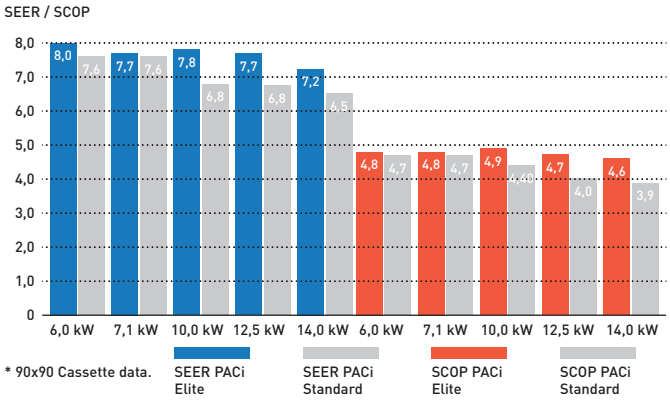

* 90x90 Cassette data.

Increased piping length for greater design flexibility

Adaptable to various building types and sizes. Maximum piping length: 75 m (10,0, 12,5, 14,0 kW). 50 m (6,0, 7,1 kW).

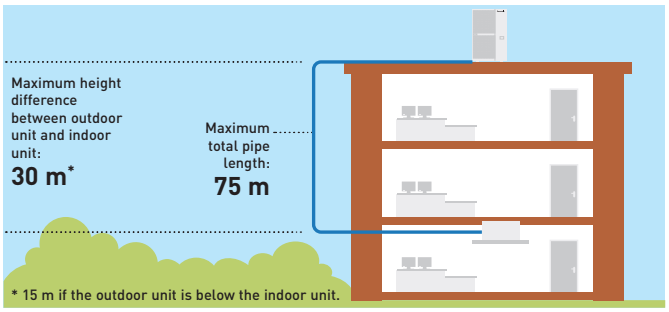

PACi Elite design operation conditions

Cooling operation is possible when outdoor temperature is as low as -15 °C or as high as 46 °C. Heating operation is possible when outdoor temperature is as low as -20 °C. The remote control temperature setting offers a range from 18 °C to 30 °C.

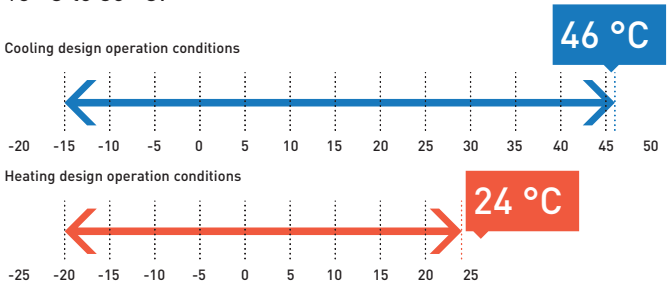

Compact & Flexible-design

The slim and lightweight design means the PACi outdoor unit can be installed in a number of compact situations. As the unit only weighs 99kg, it is easy to carry and easy to install.

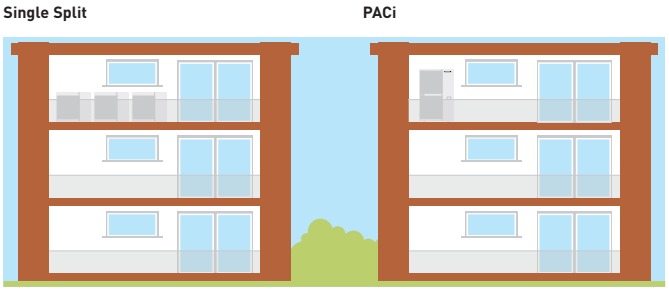

Energy consumption monitoring display with the CZ-RTC5B

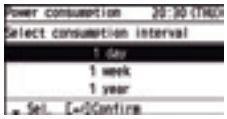

Menu selection: 3 types (Day/Week/Year)of display are available.

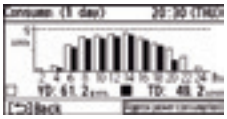

Daily Energy consumption: Data is shown with Yesterday's record.(Graph starts from 0 o'clock to 24 o'clock only.)

Weekly Energy consumption: Power consumption of each day of the week can be checked.

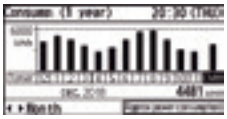

Annual Energy consumption: Power consumption of each month can be checked.

datanavi

Datanavi, a new way to connect.
Simple and easy support tool with your smartphone.

· Scan & Save AC system info
· Easy access to manual database
· Commissioning, F gas check data history

Demand response compliant (CZ-CAPDC3) as a standard function

This terminal allows demand control of the outdoor unit. Several setting levels are available:
· Level-1, 2, 3: 75 / 50 / 0 %
· Level-1, 2 can be set in 40 - 100 % (40, 45, 50...95, 100: each 5 %)
CZ-CAPDC3 also allows for forced stop which can be used for Fire-alarm connection on LV3.

CZ-CAPDC3 is an optional for R410A models.

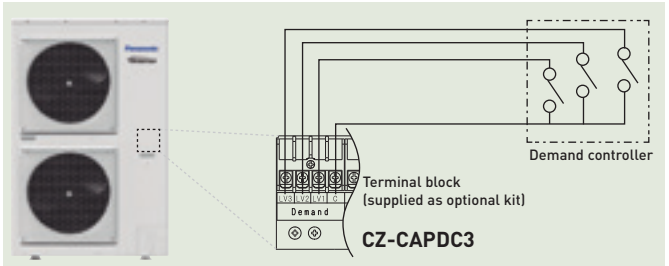

Generation PACi
90x90 Cassette

A modern flat panel design to blend into any space. These Cassettes have been developed to satisfy today's customer needs such as high energy saving, comfort and healthier air.

nanoe™ X

PACi 90x90 Cassette

- Better SCOP & SEER (up to 15 %) than conventional R410 models
- Advanced comfort and energy saving by Econavi sensor
- nanoe™ X Technology
- Super quiet operation from 27dB(A)

These Cassettes offer upgraded Econavi and nanoe™ X Technology for making application space more comfortable, healthy and efficient.

Always fresh and clean air with nanoe™ X

nanoe™ X is available with the advanced technology of room air conditioning.

- This unique technology operation can work simultaneously or independently from heating/cooling operation.
- Inhibiting certain viruses, bacteria & deodorisation (bacteria, fungus, pollen, virus and cigarette smoke). OH radicals in nanoe™ X pull bacteria's hydrogen out to effectively deodorise and sterilise
- Clean inside by nanoe™ X + Dry control: inside of indoor unit can be cleaned by short operation circuit with nanoe™ X and drying

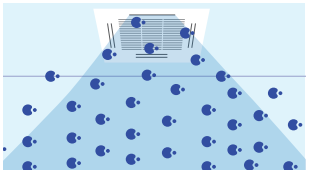

CZ-RTC5B and optional accessory CZ-CNEXU1 are required to use nanoe™ X function.

Optional Econavi intelligent sensor

Human activity sensor and floor temperature sensor can reduce waste energy, by optimising air conditioner operation.

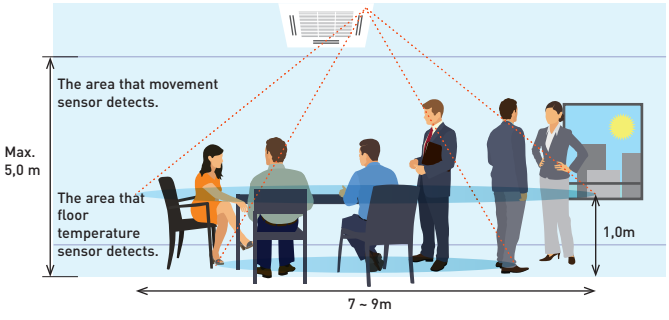

Advanced Econavi functions.

ECONAVI

2 sensors (movement and floor temperature) can find waste of energy and control effectively. Floor temperature can detect up to 5 m ceiling height.

Econavi exclusive panel. Optional (CZ-KPU3AW)

Floor temperature sensor.
This sensor detects average floor temperature and operates circulation if floor temperature is low.

Movement sensor.
This sensor detects the amount of human activity, and operates effectively.

Wired remote controller CZ-RTC5B is required.

Humidity sensor.

Humidity sensor has air suction function, and realises comfort and energy saving based on temperature and humidity.

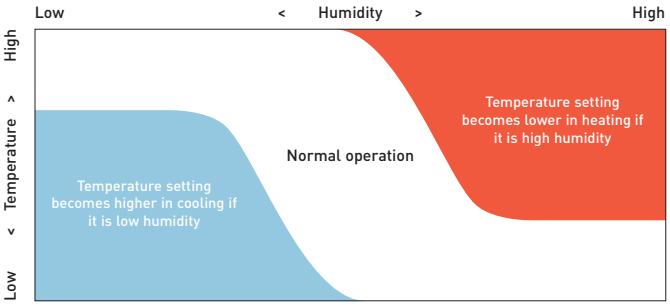

Group control, circulation function.

Circulating operation is activated when a room is unoccupied to evenly distribute air and minimize temperature gaps in both heating and cooling operation.

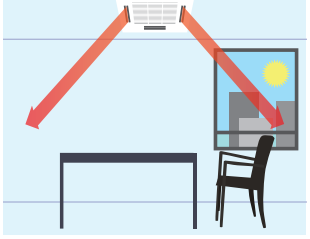

Circulation by Detecting no movement (10 min.)

Indirect air flow by detecting movement.

Solutions for 24/7/365 applications

High efficiency products for 24/7 applications. Panasonic has developed a complete range of solutions for server rooms which efficiently protect your servers, keeping them at an appropriate temperature even when the outdoor temperature is below -20 °C.

High efficiency all the year

Key points:

- From 2,5 to 7,1 kW with TKEA R32 refrigerant units A+++ in cooling
- PACi units from 3,6 to 14,0 kW
- Backup function
- Redundancy function
- Alternative run function
- Error information by Dry Contact
- Operation even at -20 °C outdoor temperature
- High seasonal performance
- Product design for 24/7 operation

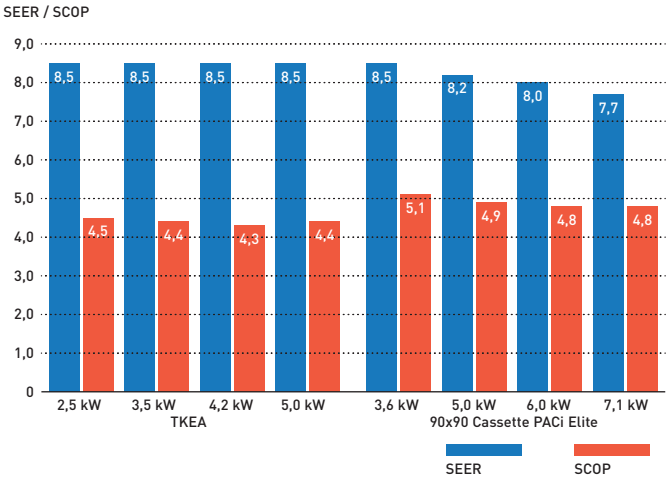

Interface to run 2 TKEA / PKEA. PAW-SERVER-PKEA

The PAW-SERVER-PKEA server room interface manages redundancy and backup of two TKEA / PKEA units with two different selectable modes:

- Plug and play by embedded redundancy and backup algorithm (no external signal needed. Further details please refer to operation manual)
- External (third party PLC) redundancy and backup management by Dry Contact

All settings are possible without the need for a computer connection.

A special Energy Saving Mode is selectable by deep switch (available only in plug and play mode). The level of remote control input prohibition can be set when external management is by Dry Contact.

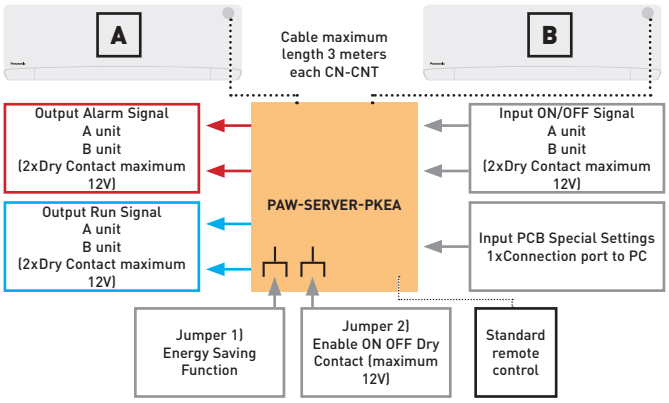

Interfaces to run 2 or 3 PACi and VRF indoor units

PAW-PACR3.

In combination with one PAW-T10 on each indoor unit, allows the redundant operation of 2 (or 3) PACi or VRF indoor units.

All units will be operated sequentially in order to achieve the same operating time (example turn every 8 hours within a 24 hour period).

If the room temperature exceeds a freely set value, the 2nd (or 3rd) unit will be switched ON and an alarm will be activated.

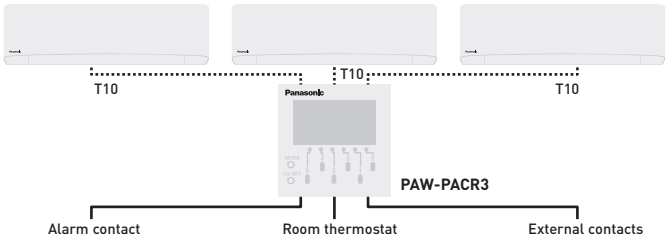

Display and Settings:

- Possible to select next unit manually
- Possible to reset operation
- LED display shows operation status of the 2 or 3 units
- Operation status output
- Alarm LED and alarm output
- Temperature limit can be set
- Temperature hysteresis can be set
- Room temperature is displayed
- Time counter displayed

Backup control by using CZ-RTC5B.

Group wiring of 2 systems of PACi can do auto individual control.

- Rotation operation
- Backup operation
- Support operation

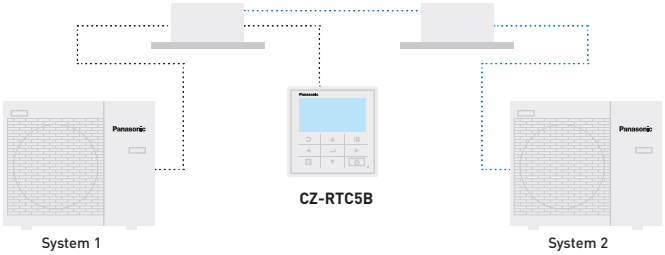

CZ-CAPRA1.

RAC interface adapter for integration into P-Link.

Range of Commercial units R32

Page	Indoor units	2,5 kW	3,5 ~ 3,6 kW	4,5 kW	5,0 kW	6,0 kW
P. 164	Wall-mounted Professional Inverter -20 °C • R32 refrigerant	KIT-Z25-TKEA	KIT-Z35-TKEA	KIT-Z42-TKEA	KIT-Z50-TKEA	
P. 166	Wall-mounted Inverter+ • R32 refrigerant		S-36PK2E5B	S-45PK2E5B	S-50PK2E5B	S-60PK2E5B
P. <?>	4 Way 60x60 Cassette Inverter • R32 refrigerant	CS-Z25UB4EAW	CS-Z35UB4EAW		CS-Z50UB4EAW	CS-Z60UB4EAW
P. 170	4 Way 60x60 Cassette Inverter+ • R32 refrigerant		S-36PY2E5B	S-45PY2E5B [1]	S-50PY2E5B	
P. 172	4 Way 90x90 Cassette Inverter+ • R32 refrigerant		S-36PU2E5B	S-45PU2E5B	S-50PU2E5B	S-60PU2E5B
P. 176	Ceiling Inverter+ • R32 refrigerant		S-36PT2E5B	S-45PT2E5B	S-50PT2E5B	S-60PT2E5B
P. <?>	Low Static Pressure Hide Away Inverter • R32 refrigerant	CS-Z25UD3EAW	CS-Z35UD3EAW		CS-Z50UD3EAW	CS-Z60UD3EAW
P. 180	High Static Pressure Hide Away Inverter+ • R32 refrigerant		S-36PF1E5B	S-45PF1E5B	S-50PF1E5B	S-60PF1E5B
P. 184	Low Static Pressure Hide Away Inverter+ • R32 refrigerant		S-36PN1E5B	S-45PN1E5B	S-50PN1E5B	S-60PN1E5B
P. 188	High Static Pressure Hide Away 20-25 kW Inverter+ • R32 refrigerant					
P. 204	Air Handling Unit Kit 3,6-25,0 kW				PAW-280PAH2(M/L)	PAW-280PAH2(M/L)

Outdoor units	3,6 kW	5,0 kW	6,0 kW
PACi Elite • R32 refrigerant	U-36PZH2E5	U-50PZH2E5	U-60PZH2E5
PACi Standard • R32 refrigerant			U-60PZ2E5

1) The 4,5 kW indoor unit are only available only for Twin, Triple and Double-Twin combinations. * U-__E5 Single Phase / U-__E8 Three Phase.

7,1 kW	10,0 kW	12,5 kW	14,0 kW	20,0 kW	25,0 kW
KIT-Z71-TKEA					
S-71PK2E5B	S-100PK2E5B (9,0 kW)				
S-71PU2E5B	S-100PU2E5B	S-125PU2E5B	S-140PU2E5B		
S-71PT2E5B	S-100PT2E5B	S-125PT2E5B	S-140PT2E5B		
S-71PF1E5B	S-100PF1E5B	S-125PF1E5B	S-140PF1E5B		
S-71PN1E5B	S-100PN1E5B	S-125PN1E5B	S-140PN1E5B		
				S-200PE3E5B	S-250PE3E5B
PAW-280PAH2(M/L)	PAW-280PAH2(M/L)	PAW-280PAH2(M/L)	PAW-280PAH2(M/L)	PAW-280PAH2(M/L)	PAW-280PAH2(M/L)

7,1 kW	10,0 kW	12,5 kW	14,0 kW	20,0 kW	25,0 kW
U-71PZH2E5 / U-71PZH2E8	U-100PZH2E5 / U-100PZH2E8	U-125PZH2E5 / U-125PZH2E8	U-140PZH2E5 / U-140PZH2E8	U-200PZH2E8	U-250PZH2E8
U-71PZ2E5	U-100PZ2E5 / U-100PZ2E8	U-125PZ2E5 / U-125PZ2E8	U-140PZ2E5 / U-140PZ2E8		

Solutions for server rooms

High efficiency products for 24/7 applications. Panasonic has developed a complete range of solutions for server rooms which efficiently protect your servers, keeping them at an appropriate temperature even when the outdoor temperature is below -20 °C.

NON STOP OPERATION 24/7 365

1 Designed for 24h/7d a week operation

High efficiency all year round. This Wall-mounted air conditioner is designed for professional, critical applications such as computer rooms where reliable cooling inside the room is necessary even when the outside temperature is low.

2 High seasonal performance

Highest Energy Rating: A+++ (2,5 to 5,0 kW units).
Highly efficient performance - even at -20 °C outside.
Uses new R32 refrigerant.

3 Server room logic control

PAW-SERVER-PKEA: Group wiring of 2 TKEA systems ensures auto individual control.
BMS interface: Panasonic offer different interfaces for integrate to Modbus and BACnet.

4 More comfort

Indoor Fan. Cross-Flow-Fan: High durability rolling bearings, large size (φ105 mm) fan. High efficiency blade. Random pitch blade (low sound)
Compressor: DC2P Panasonic original compressor, with high efficiency and reliability.

High efficiency all the year

Key points:

- From 2,5 to 7,1 kW with TKEA R32 refrigerant units A+++ in cooling
- Backup function
- Redundancy function
- Alternative run function
- Error information by Dry Contact
- Operation even at -20 °C outdoor temperature
- High seasonal performance
- Product design for 24/7 operation

Exceptional efficiency means exceptional savings

TKEA provides high capacity at -20 °C!

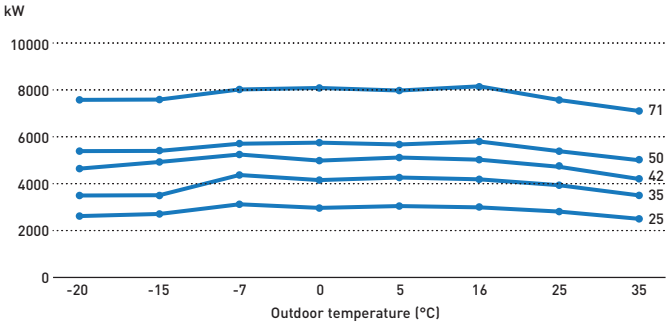

PAW-SERVER-PKEA Logic

Rotation operation time line.
Every 12 hours units change operation On/Off to increase compressor lifecycle.

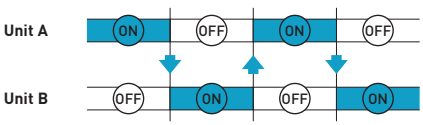

Back up operation time line.
When unit A has an error, unit B switches on automatically and gives the error output signal.

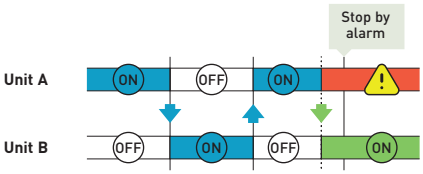

Support operation time line.
When room temperature rises to than 28 °C, both units work together and automatically give an output error signal.

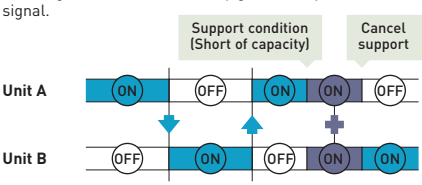

Wall-mounted Professional Inverter -20 °C • R32 refrigerant

Complete line-up with high efficiency even at -20 °C

This Wall-mounted air conditioner is especially designed for professional applications such as computer rooms where cooling inside the room is necessary even when the outside temperature is low. Furthermore this air conditioner has an automatic changeover system, in order to maintain the inside temperature even when sharp outside temperature changes occur.

Technical focus

- R32 refrigerant is more environmentally friendly than R410A
- Aerowings to control air draft direction
- Designed for 24h/7d a week operation
- Up to A+++ in cooling
- Highly efficient even at -20 °C
- High durability rolling bearings
- Additional piping sensors to prevent freezing
- Automatic restart

KIT			KIT-Z25-TKEA	KIT-Z35-TKEA	KIT-Z42-TKEA	KIT-Z50-TKEA	KIT-Z71-TKEA
Cooling capacity	Nominal (Min - Max)	kW	2,50 (0,85 - 3,00)	3,50 (0,85 - 4,00)	4,20 (0,98 - 5,00)	5,00 (0,98 - 6,00)	7,10 (0,98 - 8,10)
EER [1]	Nominal (Min - Max)	W/W	4,90 (5,00 - 4,29)	4,07 (5,00 - 3,64)	3,82 (4,90 - 3,25)	3,60 (3,50 - 3,09)	3,17 (2,33 - 3,03)
SEER [2]			**8,50 A+++**	**8,50 A+++**	**8,50 A+++**	**8,50 A+++**	**6,10 A++**
Pdesign		kW	2,50	3,50	4,20	5,00	7,10
Input power cooling	Nominal (Min - Max)	kW	0,51 (0,17 - 0,70)	0,86 (0,17 - 1,10)	1,10 (0,20 - 1,54)	1,39 (0,28 - 1,94)	2,24 (0,42 - 2,67)
Annual energy consumption [3]		kWh/a	103	144	173	206	407
Heating capacity	Nominal (Min - Max)	kW	3,40 (0,85 - 5,40)	4,00 (0,85 - 6,60)	5,40 (0,98 - 7,25)	5,80 (0,98 - 8,00)	8,60 (0,98 - 9,90)
Heating capacity at -7 °C		kW	3,33	4,07	4,30	5,00	6,13
COP [1]	Nominal (Min - Max)	W/W	4,86 (5,15 - 4,12)	4,35 (5,15 - 3,63)	4,00 (4,45 - 3,37)	4,03 (2,88 - 3,20)	3,51 (2,45 - 3,47)
SCOP [2]			**4,50 A+**	**4,40 A+**	**4,30 A+**	**4,40 A+**	**4,00 A+**
Pdesign at -10 °C		kW	2,80	3,60	3,80	4,40	5,50
Input power heating	Nominal (Min - Max)	kW	0,70 (0,17 - 1,31)	0,92 (0,17 - 1,82)	1,35 (0,22 - 2,15)	1,44 (0,34 - 2,50)	2,45 (0,40 - 2,85)
Annual energy consumption [3]		kWh/a	871	1145	1237	1400	1925
Indoor unit			**CS-Z25TKEA**	**CS-Z35TKEA**	**CS-Z42TKEA**	**CS-Z50TKEA**	**CS-Z71TKEA**
Power source		V	230	230	230	230	230
Recommended fuse		A	16	16	16	16	20
Connection indoor / outdoor		mm²	4 x 1,5	4 x 1,5	4 x 1,5	4 x 2,5	4 x 2,5
Air Volume	Cool / Heat	m³/min	10,4 / 11,7	10,7 / 12,4	18,2 / 20,2	19,2 / 21,3	20,2 / 21,0
Moisture removal volume		L/h	1,5	2,0	2,4	2,8	4,1
Sound pressure [4]	Cool (Hi / Lo / Q-Lo)	dB(A)	39 / 25 / 21	42 / 28 / 21	43 / 32 / 29	44 / 37 / 30	47 / 38 / 35
	Heat (Hi / Lo / Q-Lo)	dB(A)	41 / 27 / 22	43 / 30 / 22	44 / 35 / 29	44 / 37 / 30	47 / 38 / 35
Dimension	H x W x D	mm	295 x 919 x 194	295 x 919 x 194	302 x 1120 x 236	302 x 1120 x 236	302 x 1120 x 236
Net weight		kg	9	10	12	12	13
Outdoor unit			**CU-Z25TKEA**	**CU-Z35TKEA**	**CU-Z42TKEA**	**CU-Z50TKEA**	**CU-Z71TKEA**
Sound pressure [4]	Cool / Heat (Hi)	dB(A)	46 / 48	48 / 50	48 / 50	48 / 50	52 / 54
Dimension [5]	H x W x D	mm	619 x 824 x 299	619 x 824 x 299	619 x 824 x 299	695 x 875 x 320	695 x 875 x 320
Net weight		kg	37	38	38	43	49
Piping connections	Liquid pipe	Inch (mm)	1/4 (6,35)	1/4 (6,35)	1/4 (6,35)	1/4 (6,35)	1/4 (6,35)
	Gas pipe	Inch (mm)	3/8 (9,52)	3/8 (9,52)	1/2 (12,70)	1/2 (12,70)	5/8 (15,88)
Pipe length range		m	3 ~ 20	3 ~ 20	3 ~ 20	3 ~ 30	3 ~ 30
Elevation difference (in/out) [6]		m	15	15	15	15	20
Pipe length for additional gas		m	7,5	7,5	7,5	7,5	10
Additional gas amount		g/m	10	10	10	15	25
Refrigerant (R32) / CO_2 Eq.		kg / T	0,96 / 0,648	1,00 / 0,675	1,08 / 0,729	1,15 / 0,776	1,32 / 0,891
Operating range	Cool Min ~ Max	°C	-20 ~ +43	-20 ~ +43	-20 ~ +43	-20 ~ +43	-20 ~ +43
	Heat Min ~ Max	°C	-15 ~ +24	-15 ~ +24	-15 ~ +24	-15 ~ +24	-15 ~ +24

Accessories	
CZ-TACG1*	Panasonic Comfort Cloud for internet control
CZ-CAPRA1*	RAC interface adapter for integration into P-Link
PAW-SERVER-PKEA*	PCB for installation in server rooms with security

Accessories	
PAW-WTRAY	Tray for condenser water compatible with outdoor elevation platform
PAW-GRDBSE20	Outdoor base ground support for noise and vibration absorption
PAW-GRDSTD40	Outdoor elevation platform 400 x 900 x 400 mm

1) EER and COP calculation is based in accordance to EN14511. 2) Energy Label Scale from A+++ to D. 3) The annual energy consumption is calculated in accordance to EU/626/2011. 4) The sound pressure of the indoor unit shows the value measured of a position 1 m in front of the main body and 0,8 m below the unit. For outdoor unit 1 m in front and 1 m in rear side of main body. The sound pressure is measured in accordance with JIS C 9612. Q-Lo: Quiet mode. Lo: The lowest set fan speed. 5) Add 70 mm for piping port. 6) When installing the outdoor unit at a higher position than the indoor unit.
* Only one of these can be used at a time.

SEER and SCOP: For KIT-Z25-TKEA. SUPER QUIET: For KIT-Z25-TKEA. INTERNET CONTROL: Optional.

Rating Conditions: Cooling Indoor 27°C DB / 19°C WB. Cooling Outdoor 35°C DB / 24°C WB. Heating Indoor 20°C DB. Heating Outdoor 7°C DB / 6°C WB. (DB: Dry Bulb; WB: Wet Bulb).
Specifications subject to change without notice. For detailed information about ErP / Energy Labelling, please visit our websites www.aircon.panasonic.eu or www.ptc.panasonic.eu.

PACi Elite Wall-mounted Inverter+
• R32 refrigerant

The Wall-mounted units with stylish matt color can be offered for many applications such as studios, gyms, high ceiling areas and even computer server rooms.

The compact design and flat face ensure discreet installation, even in a small space.

CZ-RTC5B

CZ-RTC6
CZ-RTC6BL
Optional Controller.
Wired remote controller.

CZ-RWS3
Optional Controller.
Infrared remote controller.

CZ-CENSC1
Optional Econavi Sensor.

			Single Phase				
			3,6 kW	5,0 kW	6,0 kW	7,1 kW	9,0 kW
KIT			**KIT-36PK2ZH5**	**KIT-50PK2ZH5**	**KIT-60PK2ZH5**	**KIT-71PK2ZH5**	**KIT-100PK2ZH5**
Remote controller			**CZ-RTC5B**	**CZ-RTC5B**	**CZ-RTC5B**	**CZ-RTC5B**	**CZ-RTC5B**
Cooling capacity	Nominal (Min - Max)	kW	3,6 (1,5 ~ 4,0)	5,0 (1,5 ~ 5,6)	6,1 (2,0 ~ 7,1)	7,1 (2,2 ~ 9,0)	9,5 (3,1 ~ 10,5)
EER [1]		W/W	4,90	4,10	3,86	3,50	3,26
SEER [2]			**8,0 A++**	**7,6 A++**	**7,2 A++**	**6,8 A++**	**6,4 A++**
Pdesign		kW	3,6	5,0	6,1	7,1	9,5
Input power cooling		kW	0,74	1,22	1,58	2,03	2,91
Annual energy consumption [3]		kWh/a	157	230	297	365	520
Heating capacity	Nominal (Min - Max)	kW	4,0 (1,5 ~ 5,0)	5,6 (1,5 ~ 6,5)	7,0 (1,8 ~ 8,0)	8,0 (2,0 ~ 9,0)	9,5 (3,1 ~ 11,5)
COP [1]		W/W	4,94	4,21	4,46	4,00	3,97
SCOP [2]			**4,9 A++**	**4,7 A++**	**4,8 A++**	**4,7 A++**	**4,1 A+**
Pdesign at -10 °C		kW	3,6	4,5	6,0	5,2	8,0
Input power heating		kW	0,81	1,33	1,57	2,00	2,39
Annual energy consumption [3]		kWh/a	1029	1340	1750	1549	2732
Indoor unit			**S-36PK2E5B**	**S-50PK2E5B**	**S-60PK2E5B**	**S-71PK2E5B**	**S-100PK2E5B**
Air volume	Hi / Med / Lo	m³/min	13,0 / 11,0 / 9,0	16,0 / 14,0 / 11,0	20,0 / 18,0 / 15,0	20,0 / 17,5 / 14,5	22,0 / 18,5 / 15,0
Sound pressure [4]	Hi / Med / Lo	dB(A)	35 / 31 / 27	40 / 36 / 32	47 / 44 / 40	47 / 44 / 40	49 / 45 / 41
Dimension	H x W x D	mm	302 x 1120 x 236	302 x 1120 x 236	302 x 1120 x 236	302 x 1120 x 236	302 x 1120 x 236
Net weight		kg	13	13	14	14	14
Outdoor unit			**U-36PZH2E5**	**U-50PZH2E5**	**U-60PZH2E5**	**U-71PZH2E5**	**U-100PZH2E5**
Power source		V	220 - 230 - 240	220 - 230 - 240	220 - 230 - 240	220 - 230 - 240	220 - 230 - 240
Current	Cool	A	3,55 - 3,40 - 3,25	5,70 - 5,50 - 5,25	7,70 - 7,35 - 7,05	9,55 - 9,10 - 8,75	13,50 - 12,90 - 12,40
	Heat	A	3,95 - 3,75 - 3,60	6,35 - 6,05 - 5,80	7,65 - 7,30 - 7,00	9,20 - 8,80 - 8,50	11,10 - 10,60 - 10,10
Air volume	Cool / Heat	m³/min	40 / 40	40 / 45	40 / 45	61 / 60	118 / 108
Sound pressure	Cool / Heat (Hi)	dB(A)	43 / 44	45 / 48	46 / 49	48 / 50	52 / 52
Sound power	Cool / Heat (Hi)	dB	62 / 64	64 / 68	65 / 69	65 / 67	69 / 69
Dimension	H x W x D	mm	695 x 875 x 320	695 x 875 x 320	695 x 875 x 320	996 x 940 x 340	1416 x 940 x 340
Net weight		kg	43	43	44	68	99
Piping connections	Liquid pipe	Inch (mm)	1/4 (6,35)	1/4 (6,35)	3/8 (9,52)	3/8 (9,52)	3/8 (9,52)
	Gas pipe	Inch (mm)	1/2 (12,70)	1/2 (12,70)	5/8 (15,88)	5/8 (15,88)	5/8 (15,88)
Pipe length range		m	3 ~ 40	3 ~ 40	3 ~ 40	5 ~ 50	5 ~ 85
Elevation difference (in/out) [5]		m	30	30	30	30	30
Pipe length for additional gas		m	30	30	30	30	30
Additional gas amount		g/m	20	20	35	45	45
Refrigerant (R32) / CO_2 Eq.		kg / T	1,15 / 0,776	1,15 / 0,776	1,45 / 0,979	1,95 / 1,316	3,05 / 2,059
Operating range	Cool Min ~ Max	°C	-15 ~ +46	-15 ~ +46	-15 ~ +46	-15 ~ +46	-20 [6] ~ +46
	Heat Min ~ Max	°C	-20 ~ +24	-20 ~ +24	-20 ~ +24	-20 ~ +24	-20 ~ +24

Accessories	
CZ-RTC6	NEW Wired remote controller (non-wireless)
CZ-RTC6BL	NEW Wired remote controller with Bluetooth®
CZ-RTC5B	Wired remote controller with Econavi function and datanavi
CZ-RWS3	Infrared remote controller
CZ-CAPWFC1	Commercial WLAN Adaptor
PAW-PACR3	Interfaces to run 3 units on Backup and alternative run

Accessories	
PAW-WTRAY	Tray for condenser water compatible with outdoor elevation platform
PAW-GRDBSE20	Outdoor base ground support for noise and vibration absorption
PAW-GRDSTD40	Outdoor elevation platform 400 x 900 x 400 mm
CZ-CENSC1	Econavi energy savings sensor

Technical focus

· Modern design with flat face and compact size
· Stylish matt white color
· DC FAN for better efficiency and control
· Six directional piping outlet
· Datanavi simple support tool App with remote controller (CZ-RTC5B)
· Easy connection and control of external fan or ERV using the connector PAW-FDC on the indoor unit PCB. The external device can be controlled by the remote control of the Panasonic indoor unit

Closed discharge port

When the unit is turned OFF, the flap closes completely to prevent dust getting into the unit and to keep the equipment clean.

Quiet operation

These units are among the quietest in the industry, making them ideal for hotels and hospitals.

Smooth and durable design

Stylish matt color matches with modern interiors. The sleek, compact design ensures a discreet installation - even where space is limited.

Piping outlet in six directions

Piping outlet is possible in the six directions of right, right rear, right bottom, left, left rear and left bottom, making the installation work easier.

Air distribution is altered depending on the operational mode

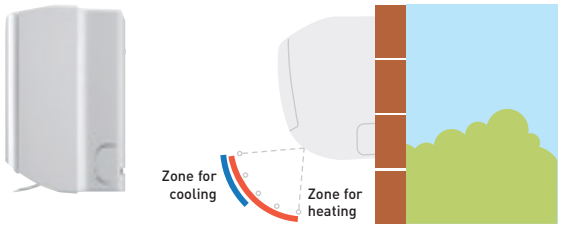

			Three Phase	
			7,1 kW	9,0 kW
KIT			**KIT-71PK2ZH8**	**KIT-100PK2ZH8**
Remote controller			**CZ-RTC5B**	**CZ-RTC5B**
Cooling capacity	Nominal (Min - Max)	kW	7,1 (2,2 ~ 9,0)	9,5 (3,1 ~ 10,5)
EER [1]		W/W	3,50	3,26
SEER [2]			**6,7 A++**	**6,3 A++**
Pdesign		kW	7,10	9,50
Input power cooling		kW	2,03	2,91
Annual energy consumption [3]		kWh/a	370	526
Heating capacity	Nominal (Min - Max)	kW	8,0 (2,0 ~ 9,0)	9,5 (3,1 ~ 11,5)
COP [1]		W/W	4,00	3,97
SCOP [2]			**4,7 A++**	**4,1 A+**
Pdesign at -10 °C		kW	5,20	8,00
Input power heating		kW	2,00	2,39
Annual energy consumption [3]		kWh/a	1549	2732
Indoor unit			**S-71PK2E5B**	**S-100PK2E5B**
Air volume	Hi / Med / Lo	m³/min	20,0 / 17,5 / 14,5	22,0 / 18,5 / 15,0
Sound pressure [4]	Hi / Med / Lo	dB(A)	47 / 44 / 40	49 / 45 / 41
Dimension	H x W x D	mm	302 x 1120 x 236	302 x 1120 x 236
Net weight		kg	14	14
Outdoor unit			**U-71PZH2E8**	**U-100PZH2E8**
Power source		V	380 - 400 - 415	380 - 400 - 415
Current	Cool	A	3,20 - 3,05 - 2,95	4,60 - 4,35 - 4,20
	Heat	A	3,10 - 3,00 - 2,85	3,75 - 3,55 - 3,45
Air volume	Cool / Heat	m³/min	61 / 60	118 / 108
Sound pressure	Cool / Heat (Hi)	dB(A)	48 / 50	52 / 52
Sound power	Cool / Heat (Hi)	dB	65 / 67	69 / 69
Dimension	H x W x D	mm	996 x 940 x 340	1416 x 940 x 340
Net weight		kg	68	99
Piping connections	Liquid pipe	Inch (mm)	3/8 (9,52)	3/8 (9,52)
	Gas pipe	Inch (mm)	5/8 (15,88)	5/8 (15,88)
Pipe length range		m	5 ~ 50	5 ~ 85
Elevation difference (in/out) [5]		m	30	30
Pipe length for additional gas		m	30	30
Additional gas amount		g/m	45	45
Refrigerant (R32) / CO_2 Eq.		kg / T	1,95 / 1,316	3,05 / 2,059
Operating range	Cool Min ~ Max	°C	-15 ~ +46	-20 [6] ~ +46
	Heat Min ~ Max	°C	-20 ~ +24	-20 ~ +24

1) EER and COP calculation is based in accordance to EN14511. 2) Energy Label Scale from A+++ to D. For models below 12 kW, the SEER and SCOP is calculated based on values of EU/626/2011. For models above 12 kW, the SEER and SCOP is calculated based on values of EU/2281/2016. 3) The annual energy consumption is calculated in accordance to EU/626/2011. 4) The sound pressure of the units shows the value measured of the position 1 m in front of the main body and 1 m below the unit. The sound pressure is measured in accordance with Eurovent 6/C/006-97 specification. 5) When installing the outdoor unit at a higher position than the indoor unit. 6) For models 100 ~ 140PZH2E5(8), it is possible to operate the lowest -20 °C in the computer rooms with the piping length of 30 m or less. * Recommended fuse for the indoor 3 A.

SEER and SCOP: For KIT-36PK2ZH5. INTERNET CONTROL: Optional.
Compatible with all Panasonic connectivity solutions. For detailed information go to the Control Systems section.

Rating Conditions: Cooling Indoor 27°C DB / 19°C WB. Cooling Outdoor 35°C DB / 24°C WB. Heating Indoor 20°C DB. Heating Outdoor 7°C DB / 6°C WB. (DB: Dry Bulb; WB: Wet Bulb).
Specifications subject to change without notice. For detailed information about ErP / Energy Labelling, please visit our websites www.aircon.panasonic.eu or www.ptc.panasonic.eu.

PACi Standard Wall-mounted Inverter+
• R32 refrigerant

The Wall-mounted units with stylish matt color can be offered for many applications such as studios, gyms, high ceiling areas and even computer server rooms.

The compact design and flat face ensure discreet installation, even in a small space.

CZ-RTC5B

CZ-RTC6
CZ-RTC6BL
Optional Controller.
Wired remote controller.

CZ-RWS3
Optional Controller.
Infrared remote controller.

CZ-CENSC1
Optional Econavi Sensor.

			Single Phase		
			6,0 kW	**7,1 kW**	**9,0 kW**
KIT			**KIT-60PK2Z5**	**KIT-71PK2Z5**	**KIT-100PK2Z5**
Remote controller			**CZ-RTC5B**	**CZ-RTC5B**	**CZ-RTC5B**
Cooling capacity	Nominal (Min - Max)	kW	6,1 (2,0 - 7,1)	7,1 (2,0 - 7,7)	9,0 (3,0 - 9,7)
EER [1]	Nominal (Min - Max)	W/W	3,79	3,21	3,47 (5,36 - 3,13)
SEER [2]			**6,8 A++**	**6,4 A++**	**6,5 A++**
Pdesign		kW	6,1	7,1	9,0
Input power cooling	Nominal (Min - Max)	kW	1,61	2,21	2,59 (0,56 - 3,10)
Annual energy consumption [3]		kWh/a	314	388	485
Heating capacity	Nominal (Min - Max)	kW	6,1 (1,8 - 7,0)	7,1 (1,8 - 8,1)	9,0 (3,0 - 10,5)
COP [1]	Nominal (Min - Max)	W/W	4,80	4,41	3,93 (5,36 - 3,56)
SCOP [2]			**4,7 A++**	**4,6 A++**	**3,9 A**
Pdesign at -10 °C		kW	6,0	6,0	9,0
Input power heating	Nominal (Min - Max)	kW	1,27	1,61	2,29 (0,56 - 2,95)
Annual energy consumption [3]		kWh/a	1787	1826	3231
Indoor unit			**S-60PK2E5B**	**S-71PK2E5B**	**S-100PK2E5B**
Air volume	Hi / Med / Lo	m³/min	20,0 / 18,0 / 15,0	20,0 / 18,0 / 15,0	22,0 / 18,5 / 15,0
Moisture removal volume		L/h	2,0	3,0	4,3
Sound pressure [4]	Hi / Med / Lo	dB(A)	47 / 44 / 40	47 / 44 / 40	49 / 45 / 41
Sound power	Hi / Med / Lo	dB	63 / 60 / 56	63 / 60 / 56	65 / 61 / 57
Dimension	H x W x D	mm	302 x 1120 x 236	302 x 1120 x 236	302 x 1120 x 236
Net weight		kg	14	14	14
Outdoor unit			**U-60PZ2E5**	**U-71PZ2E5**	**U-100PZ2E5**
Power source		V	220 - 230 - 240	220 - 230 - 240	220 - 230 - 240
Current	Cool	A	7,85 - 7,50 - 7,20	10,70 - 10,20 - 9,85	12,10 - 11,50 - 11,10
	Heat	A	6,10 - 5,85 - 5,60	7,85 - 7,50 - 7,20	10,60 - 10,20 - 9,70
Air volume	Cool / Heat	m³/min	40 / 45	50 / 45	76 / 70
Sound pressure	Cool / Heat (Hi)	dB(A)	46 / 48	49 / 49	52 / 52
Sound power	Cool / Heat (Hi)	dB	65 / 68	69 / 69	70 / 70
Dimension	H x W x D	mm	695 x 875 x 320	695 x 875 x 320	996 x 980 x 370
Net weight		kg	44	44	90
Piping connections	Liquid pipe	Inch (mm)	3/8 (9,52)	3/8 (9,52)	3/8 (9,52)
	Gas pipe	Inch (mm)	5/8 (15,88)	5/8 (15,88)	5/8 (15,88)
Pipe length range		m	3 ~ 40	3 ~ 40	5 ~ 50
Elevation difference (in/out) [5]		m	30	30	30
Pipe length for additional gas		m	30	30	30
Additional gas amount		g/m	35	35	45
Refrigerant (R32) / CO_2 Eq.		kg / T	1,45 / 0,979	1,45 / 0,979	2,60 / 1,755
Operating range	Cool Min ~ Max	°C	-10 ~ +43	-10 ~ +43	-10 ~ +43
	Heat Min ~ Max	°C	-15 ~ +24	-15 ~ +24	-15 ~ +24

Accessories	
CZ-RTC6	NEW Wired remote controller (non-wireless)
CZ-RTC6BL	NEW Wired remote controller with Bluetooth®
CZ-RTC5B	Wired remote controller with Econavi function and datanavi
CZ-RWS3	Infrared remote controller
CZ-CAPWFC1	Commercial WLAN Adaptor
PAW-PACR3	Interfaces to run 3 units on Backup and alternative run

Accessories	
PAW-WTRAY	Tray for condenser water compatible with outdoor elevation platform
PAW-GRDBSE20	Outdoor base ground support for noise and vibration absorption
PAW-GRDSTD40	Outdoor elevation platform 400 x 900 x 400 mm
CZ-CENSC1	Econavi energy savings sensor

Technical focus

· Modern design with flat face and compact size
· Stylish matt white color
· DC FAN for better efficiency and control
· Six directional piping outlet
· Datanavi simple support tool App with remote controller (CZ-RTC5B)
· Easy connection and control of external fan or ERV using the connector PAW-FDC on the indoor unit PCB. The external device can be controlled by the remote control of the Panasonic indoor unit

Closed discharge port

When the unit is turned OFF, the flap closes completely to prevent dust getting into the unit and to keep the equipment clean.

Quiet operation

These units are among the quietest in the industry, making them ideal for hotels and hospitals.

Smooth and durable design

Stylish matt color matches with modern interiors. The sleek, compact design ensures a discreet installation - even where space is limited.

Piping outlet in six directions

Piping outlet is possible in the six directions of right, right rear, right bottom, left, left rear and left bottom, making the installation work easier.

Air distribution is altered depending on the operational mode

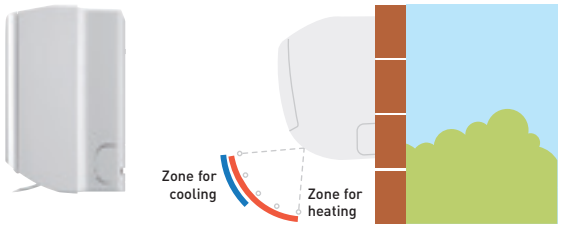

			Three Phase
			9,0 kW
KIT			**KIT-100PK2Z8**
Remote controller			**CZ-RTC5B**
Cooling capacity	Nominal (Min - Max)	kW	9,0 (3,0 - 9,7)
EER [1]	Nominal (Min - Max)	W/W	3,47 (5,36 - 3,13)
SEER [2]			**6,5 A++**
Pdesign		kW	9,0
Input power cooling	Nominal (Min - Max)	kW	2,59 (0,56 - 3,10)
Annual energy consumption [3]		kWh/a	485
Heating capacity	Nominal (Min - Max)	kW	9,0 (3,0 - 10,5)
COP [1]	Nominal (Min - Max)	W/W	3,93 (5,36 - 3,56)
SCOP [2]			**3,9 A**
Pdesign at -10 °C		kW	9,0
Input power heating	Nominal (Min - Max)	kW	2,29 (0,56 - 2,95)
Annual energy consumption [3]		kWh/a	3231
Indoor unit			**S-100PK2E5B**
Air volume	Hi / Med / Lo	m³/min	22,0 / 18,5 / 15,0
Moisture removal volume		L/h	4,3
Sound pressure [4]	Hi / Med / Lo	dB(A)	49 / 45 / 41
Sound power	Hi / Med / Lo	dB	65 / 61 / 57
Dimension	H x W x D	mm	302 x 1120 x 236
Net weight		kg	14
Outdoor unit			**U-100PZ2E8**
Power source		V	380 - 400 - 415
Current	Cool	A	4,10 - 3,90 - 3,75
	Heat	A	3,60 - 3,45 - 3,30
Air volume	Cool / Heat	m³/min	76 / 70
Sound pressure	Cool / Heat (Hi)	dB(A)	52 / 52
Sound power	Cool / Heat (Hi)	dB	70 / 70
Dimension	H x W x D	mm	996 x 980 x 370
Net weight		kg	90
Piping connections	Liquid pipe	Inch (mm)	3/8 (9,52)
	Gas pipe	Inch (mm)	5/8 (15,88)
Pipe length range		m	5 ~ 50
Elevation difference (in/out) [5]		m	30
Pipe length for additional gas		m	30
Additional gas amount		g/m	45
Refrigerant (R32) / CO_2 Eq.		kg / T	2,60 / 1,755
Operating range	Cool Min ~ Max	°C	-10 ~ +43
	Heat Min ~ Max	°C	-15 ~ +24

1) EER and COP calculation is based in accordance to EN14511. 2) Energy Label Scale from A+++ to D. For models below 12 kW, the SEER and SCOP is calculated based on values of EU/626/2011. For models above 12 kW, the SEER and SCOP is calculated based on values of EU/2281/2016. 3) The annual energy consumption is calculated in accordance to EU/626/2011. 4) The sound pressure of the units shows the value measured of the position 1 m in front of the main body and 1 m below the unit. The sound pressure is measured in accordance with Eurovent 6/C/006-97 specification. 5) When installing the outdoor unit at a higher position than the indoor unit. * Recommended fuse for the indoor 3 A.

R32 | A++ 6,8 SEER | A++ 4,7 SCOP | INVERTER+ | -10°C COOLING MODE | -15°C HEATING MODE | DC FAN | R22/R410A RENEWAL | OPTIONAL WLAN | BMS CONNECTIVITY | 5 YEARS COMPRESSOR WARRANTY

SEER and SCOP: For KIT-60PK2Z5. INTERNET CONTROL: Optional.
Compatible with all Panasonic connectivity solutions. For detailed information go to the Control Systems section.

Rating Conditions: Cooling Indoor 27°C DB / 19°C WB. Cooling Outdoor 35°C DB / 24°C WB. Heating Indoor 20°C DB. Heating Outdoor 7°C DB / 6°C WB. (DB: Dry Bulb; WB: Wet Bulb).
Specifications subject to change without notice. For detailed information about ErP / Energy Labelling, please visit our websites www.aircon.panasonic.eu or www.ptc.panasonic.eu.

PACi Elite and Standard 4 Way 60x60 Cassette Inverter+ • R32 refrigerant

Small and powerful, ideal for offices and restaurants

Standard units only for Twin, Triple and Double-twin combinations.

CZ-RTC5B

CZ-KPY3AW
Panel 700 x 700 mm.

CZ-KPY3BW
Panel 625 x 625 mm.

CZ-RTC6
CZ-RTC6BL
Optional Controller.
Wired remote controller.

CZ-RWS3
Optional Controller.
Infrared remote controller.

			Single Phase	
			3,6 kW	**5,0 kW**
KIT			**KIT-36PY2ZH5**	**KIT-50PY2ZH5**
Remote controller			**CZ-RTC5B**	**CZ-RTC5B**
Cooling capacity	Nominal (Min - Max)	kW	3,6 (1,5 - 4,0)	5,0 (1,5 - 5,6)
EER [1]		W/W	4,68	3,68
SEER [2]			**6,6 A++**	**6,4 A++**
Pdesign		kW	3,6	5,0
Input power cooling		kW	0,77	1,36
Annual energy consumption [3]		kWh/a	191	273
Heating capacity	Nominal (Min - Max)	kW	4,0 (1,5 - 5,0)	5,6 (1,5 - 6,5)
COP [1]		W/W	4,26	3,46
SCOP [2]			**4,6 A++**	**4,3 A+**
Pdesign at -10 °C		kW	3,6	4,5
Input power heating		kW	0,94	1,62
Annual energy consumption [3]		kWh/a	1096	1465
Indoor unit			**S-36PY2E5B**	**S-50PY2E5B**
Air volume	Hi / Med / Lo	m³/min	9,7 / 8,0 / 6,0	11,1 / 9,8 / 8,5
Moisture removal volume		L/h	1,5	2,4
Sound pressure [4]	Hi / Med / Lo	dB(A)	36 / 32 / 26	40 / 37 / 33
Sound power	Hi / Med / Lo	dB	51 / 47 / 41	55 / 52 / 48
Dimension (H x W x D) / Net weight	Indoor	mm / kg	288 x 583 x 583 / 18	288 x 583 x 583 / 18
	CZ-KPY3AW Panel	mm / kg	31 x 700 x 700 / 2,4	31 x 700 x 700 / 2,4
	CZ-KPY3BW Panel	mm / kg	31 x 625 x 625 / 2,4	31 x 625 x 625 / 2,4
Outdoor unit			**U-36PZH2E5**	**U-50PZH2E5**
Power source		V	220 - 230 - 240	220 - 230 - 240
Current	Cool	A	3,65 - 3,50 - 3,35	6,35 - 6,10 - 5,85
	Heat	A	4,50 - 4,30 - 4,15	7,70 - 8,40 - 8,10
Air volume	Cool / Heat	m³/min	40 / 40	40 / 45
Sound pressure	Cool / Heat (Hi)	dB(A)	43 / 44	45 / 48
Sound power	Cool / Heat (Hi)	dB	62 / 64	64 / 68
Dimension / Net weight	H x W x D	mm / kg	695 x 875 x 320 / 43	695 x 875 x 320 / 43
Piping connections	Liquid pipe	Inch (mm)	1/4 (6,35)	1/4 (6,35)
	Gas pipe	Inch (mm)	1/2 (12,70)	1/2 (12,70)
Pipe length range		m	3 ~ 40	3 ~ 40
Elevation difference (in/out) [5]		m	30	30
Pipe length for additional gas		m	30	30
Additional gas amount		g/m	20	20
Refrigerant (R32) / CO_2 Eq.		kg / T	1,15 / 0,776	1,15 / 0,776
Operating range	Cool Min ~ Max	°C	-15 ~ +46	-15 ~ +46
	Heat Min ~ Max	°C	-20 ~ +24	-20 ~ +24

R32 | A++ 6,6 SEER | A++ 4,6 SCOP | INVERTER+ | -15°C COOLING MODE | -20°C HEATING MODE | DC FAN | R22 R410A → R32 R22/R410A RENEWAL | OPTIONAL WLAN | BMS CONNECTIVITY | 5 YEARS COMPRESSOR WARRANTY

SEER and SCOP: For KIT-36PY2ZH5. INTERNET CONTROL: Optional.
Compatible with all Panasonic connectivity solutions. For detailed information go to the Control Systems section.

Technical focus

· Fresh air distribution
· Multidirectional air flow
· Integrated drain pump gives 850 mm lift
· 3 speed centrifugal fan
· DC FAN for better efficiency and control
· Easy connection and control of external fan or ERV using the connector PAW-FDC on the indoor unit PCB. The external device can be controlled by the remote control of the Panasonic indoor unit

Lighter and slimmer, easier installation

Lightweight and very slim which makes installation possible even in narrow ceilings.
Designed to fit exactly into a 600x600 mm ceiling grid without the need to alter the bar configuration.

A drain height of approximately 850 mm from the ceiling surface

The drain height can be increased by approx. 350 mm over the conventional value by using a high-lift drain pump, and long horizontal piping is possible.
Lightweight at 18kg, the unit is also very slim with a height of only 288 mm, making installation possible even in narrow ceilings.

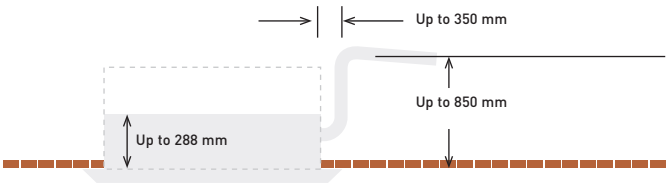

Significant reduction of power consumption by using highly developed DC fan motors with variable speed, special heat exchangers, etc.

			3,6 kW	4,5 kW	5,0 kW
Indoor unit			**S-36PY2E5B**	**S-45PY2E5B**[1)]	**S-50PY2E5B**
Cooling capacity		kW	3,6	4,5	5,0
Heating capacity		kW	4,0	5,2	5,6
Current	Cool	A	0,30	0,32	0,35
	Heat	A	0,30	0,30	0,35
Input power	Cool	kW	0,04	0,04	0,05
	Heat	kW	0,04	0,04	0,04
Air volume	Cool (Hi / Med / Lo)	m³/min	9,7/8,0/6,0	10,0/8,8/7,0	11,1/9,8/8,5
	Heat (Hi / Med / Lo)	m³/min	9,9/8,2/6,0	10,3/9,2/7,0	11,1/9,8/8,7
Moisture removal volume		L/h	1,5	2,2	2,4
Sound pressure [6)]	Cool (Hi / Med / Lo)	dB(A)	36/32/26	38/34/28	40/37/33
	Heat (Hi / Med / Lo)	dB(A)	36/32/26	38/34/28	40/37/33
Sound power	Cool (Hi / Med / Lo)	dB	51/47/41	53/49/43	55/52/48
	Heat (Hi / Med / Lo)	dB	51/47/41	53/49/43	55/52/48
Dimension (H x W x D)	Indoor	mm	288 x 583 x 583	288 x 583 x 583	288 x 583 x 583
	Panel CZ-KPY3AW	mm	31 x 700 x 700	31 x 700 x 700	31 x 700 x 700
	Panel CZ-KPY3BW	mm	31 x 625 x 625	31 x 625 x 625	31 x 625 x 625
Net weight	Indoor	kg	18	18	18
	Panel	kg	2,4	2,4	2,4
Piping connections	Liquid pipe	Inch (mm)	1/4 (6,35)	1/4 (6,35)	1/4 (6,35)
	Gas pipe	Inch (mm)	1/2 (12,70)	1/2 (12,70)	1/2 (12,70)
Operating range	Cool Min ~ Max	°C	+18 ~ +32	+18 ~ +32	+18 ~ +32
	Heat Min ~ Max	°C	+16 ~ +30	+16 ~ +30	+16 ~ +30

1) Only for multi combinations.
Recommended fuse for the indoor 3 A.

Accessories	
CZ-RTC6	NEW Wired remote controller (non-wireless)
CZ-RTC6BL	NEW Wired remote controller with Bluetooth®
CZ-RTC5B	Wired remote controller with Econavi function and datanavi
CZ-RWS3	Infrared remote controller
CZ-CAPWFC1	Commercial WLAN Adaptor

Accessories	
PAW-WTRAY	Tray for condenser water compatible with outdoor elevation platform
PAW-GRDBSE20	Outdoor base ground support for noise and vibration absorption
PAW-GRDSTD40	Outdoor elevation platform 400 x 900 x 400 mm
CZ-CENSC1	Econavi energy savings sensor

1) EER and COP calculation is based in accordance to EN14511. 2) Energy Label Scale from A+++ to D. For models below 12 kW, the SEER and SCOP is calculated based on values of EU/626/2011. For models above 12 kW, the SEER and SCOP is calculated based on values of EU/2281/2016. 3) The annual energy consumption is calculated in accordance to EU/626/2011. 4) The sound pressure of the units shows the value measured of the position 1,5 m below the unit. The sound pressure is measured in accordance with Eurovent 6/C/006-97 specification. 5) When installing the outdoor unit at a higher position than the indoor unit. * Recommended fuse for the indoor 3 A.

Rating Conditions: Cooling Indoor 27°C DB / 19°C WB. Cooling Outdoor 35°C DB / 24°C WB. Heating Indoor 20°C DB. Heating Outdoor 7°C DB / 6°C WB. (DB: Dry Bulb; WB: Wet Bulb).
Specifications subject to change without notice. For detailed information about ErP / Energy Labelling, please visit our websites www.aircon.panasonic.eu or www.ptc.panasonic.eu.

PACi Elite 4 Way 90x90 Cassette Inverter+ • R32 refrigerant

Large capacity PACi. Trusted comfort and high efficiency

Thanks to advances in design and technology such as the high performance turbo fan which is more efficient and silent, and nanoe™ X Technology, the U2 Panasonic 4 way 90x90 Cassette offers high energy saving, fresh air and comfort.

CZ-RTC5B

CZ-KPU3W
Standard panel.

CZ-KPU3AW
Optional Econavi panel (CZ-RTC5B is required).

nanoe™X

CZ-CNEXU1
Optional nanoe X Generator Mark 1 kit (CZ-RTC5B is required).

CZ-RTC6
CZ-RTC6BL
Optional Controller.
Wired remote controller.

CZ-RWS3 +
CZ-RWRU3W
Optional Controller.
Infrared remote controller.

			Single Phase						
			3,6 kW	5,0 kW	6,0 kW	7,1 kW	10,0 kW	12,5 kW	14,0 kW
KIT			**KIT-36PU2ZH5**	**KIT-50PU2ZH5**	**KIT-60PU2ZH5**	**KIT-71PU2ZH5**	**KIT-100PU2ZH5**	**KIT-125PU2ZH5**	**KIT-140PU2ZH5**
Remote controller			**CZ-RTC5B**	**CZ-RTC5B**	**CZ-RTC5B**	**CZ-RTC5B**	**CZ-RTC5B**	**CZ-RTC5B**	**CZ-RTC5B**
Cooling capacity	Nominal (Min - Max)	kW	3,6 (1,5 - 4,0)	5,0 (1,5 - 5,6)	6,0 (2,0 - 7,1)	7,1 (2,2 - 9,0)	10,0 (3,1 - 12,5)	12,5 (3,2 - 14,0)	14,0 (3,3 - 16,0)
EER [1]		W/W	5,22	4,31	4,05	4,06	4,41	3,80	3,41
SEER [2]			**8,5 A+++**	**8,2 A++**	**8,0 A++**	**7,7 A++**	**7,8 A++**	**7,7**	**7,2**
Pdesign		kW	3,6	5,0	6,0	7,1	10,0	12,5	14,0
Input power cooling		kW	0,69	1,16	1,48	1,75	2,27	3,29	4,11
Annual energy consumption [3]		kWh/a	148	213	262	323	449	—	—
Heating capacity	Nominal (Min - Max)	kW	4,0 (1,5 - 5,0)	5,6 (1,5 - 6,5)	7,0 (1,8 - 8,0)	8,0 (2,0 - 9,0)	11,2 (3,1 - 14,0)	14,0 (3,2 - 16,0)	16,0 (3,3 - 18,0)
COP [1]		W/W	5,48	4,71	4,29	4,30	5,00	4,61	4,30
SCOP [2]			**5,1 A+++**	**4,9 A++**	**4,8 A++**	**4,8 A++**	**4,9 A++**	**4,7**	**4,6**
Pdesign at -10 °C		kW	3,6	4,5	6,0	5,2	8,0	9,5	10,6
Input power heating		kW	0,73	1,19	1,63	1,86	2,24	3,04	3,72
Annual energy consumption [3]		kWh/a	988	1286	1750	1517	2286	—	—
Indoor unit			**S-36PU2E5B**	**S-50PU2E5B**	**S-60PU2E5B**	**S-71PU2E5B**	**S-100PU2E5B**	**S-125PU2E5B**	**S-140PU2E5B**
Air volume	Hi / Med / Lo	m³/min	14,5 / 13,0 / 11,5	16,5 / 13,5 / 11,5	21,0 / 16,0 / 13,0	22,0 / 16,0 / 13,0	36,0 / 26,0 / 18,0	37,0 / 27,0 / 19,0	38,0 / 29,0 / 20,0
Sound pressure [4]	Hi / Med / Lo	dB(A)	30 / 28 / 27	32 / 29 / 27	36 / 31 / 28	37 / 31 / 28	45 / 38 / 32	46 / 39 / 33	47 / 40 / 34
Dimension	Indoor (H x W x D)	mm	256 x 840 x 840	256 x 840 x 840	256 x 840 x 840	256 x 840 x 840	319 x 840 x 840	319 x 840 x 840	319 x 840 x 840
	Panel (H x W x D)	mm	33,5 x 950 x 950	33,5 x 950 x 950	33,5 x 950 x 950	33,5 x 950 x 950	33,5 x 950 x 950	33,5 x 950 x 950	33,5 x 950 x 950
Net weight	Indoor / Panel	kg	19 / 5	19 / 5	20 / 5	20 / 5	25 / 5	25 / 5	25 / 5
Outdoor unit			**U-36PZH2E5**	**U-50PZH2E5**	**U-60PZH2E5**	**U-71PZH2E5**	**U-100PZH2E5**	**U-125PZH2E5**	**U-140PZH2E5**
Power source		V	220 - 230 - 240	220 - 230 - 240	220 - 230 - 240	220 - 230 - 240	220 - 230 - 240	220 - 230 - 240	220 - 230 - 240
Current	Cool	A	3,35 - 3,20 - 3,05	5,45 - 5,25 - 5,00	7,30 - 6,95 - 6,70	8,25 - 7,90 - 7,55	10,40 - 9,95 - 9,50	15,20-14,50-13,90	19,10-18,20-17,50
	Heat	A	3,55 - 3,40 - 3,25	5,70 - 5,45 - 5,20	8,05 - 7,70 - 7,40	8,60 - 8,25 - 8,00	10,20 - 9,80 - 9,40	14,00-13,40-12,80	17,20-16,50-15,80
Air volume	Cool / Heat	m³/min	40 / 40	40 / 45	40 / 45	61 / 60	118 / 108	125 / 122	129 / 116
Sound pressure	Cool / Heat (Hi)	dB(A)	43 / 44	45 / 48	46 / 49	48 / 50	52 / 52	53 / 53	54 / 54
Sound power	Cool / Heat (Hi)	dB	62 / 64	64 / 68	65 / 69	65 / 67	69 / 69	70 / 70	71 / 71
Dimension	H x W x D	mm	695 x 875 x 320	695 x 875 x 320	695 x 875 x 320	996 x 940 x 340	1416 x 940 x 340	1416 x 940 x 340	1416 x 940 x 340
Net weight		kg	43	43	44	68	99	99	99
Piping connections	Liquid pipe	Inch (mm)	1/4 (6,35)	1/4 (6,35)	3/8 (9,52)	3/8 (9,52)	3/8 (9,52)	3/8 (9,52)	3/8 (9,52)
	Gas pipe	Inch (mm)	1/2 (12,70)	1/2 (12,70)	5/8 (15,88)	5/8 (15,88)	5/8 (15,88)	5/8 (15,88)	5/8 (15,88)
Pipe length range		m	3 ~ 40	3 ~ 40	3 ~ 40	5 ~ 50	5 ~ 85	5 ~ 85	5 ~ 85
Elevation difference (in/out) [5]		m	30	30	30	30	30	30	30
Pipe length for additional gas		m	30	30	30	30	30	30	30
Additional gas amount		g/m	20	20	35	45	45	45	45
Refrigerant (R32) / CO_2 Eq.		kg / T	1,15 / 0,776	1,15 / 0,776	1,45 / 0,979	1,95 / 1,316	3,05 / 2,059	3,05 / 2,059	3,05 / 2,059
Operating range	Cool Min ~ Max	°C	-15 ~ +46	-15 ~ +46	-15 ~ +46	-15 ~ +46	-20 [6] ~ +46	-20 [6] ~ +46	-20 [6] ~ +46
	Heat Min ~ Max	°C	-20 ~ +24	-20 ~ +24	-20 ~ +24	-20 ~ +24	-20 ~ +24	-20 ~ +24	-20 ~ +24

Accessories	
CZ-RTC6	NEW Wired remote controller (non-wireless)
CZ-RTC6BL	NEW Wired remote controller with Bluetooth®
CZ-RTC5B	Wired remote controller with Econavi function and datanavi
CZ-RWS3 + CZ-RWRU3W	Infrared remote controller
CZ-CAPWFC1	Commercial WLAN Adaptor
CZ-KPU3AW	Econavi exclusive panel

Accessories	
CZ-CNEXU1	nanoe X Generator Mark 1 kit
PAW-WTRAY	Tray for condenser water compatible with outdoor elevation platform
PAW-GRDBSE20	Outdoor base ground support for noise and vibration absorption
PAW-GRDSTD40	Outdoor elevation platform 400 x 900 x 400 mm
CZ-CENSC1	Econavi energy savings sensor

Technical focus

- High performance turbo fan, path system for heat exchanger
- nanoe™ X that improves indoor air quality
- Econavi: Intelligent sensor to reduce waste of energy
- Datanavi simple support tool App with remote controller (CZ-RTC5B)
- Lower noise in slow fan operation
- Light weight, easy piping
- Drain pump included

Group control, circulation function

Circulating operation is activated when a room is unoccupied to evenly distribute air and minimize temperature gaps in both heating and cooling operation.

nanoe™ X deodorises and inhibits certain bacteria & viruses

nanoe X Generator Mark 1 produces 4,8 trillion[1)] OH radicals per second.
Greater amounts of OH radicals contained in nanoe™ X lead to outstanding effects in the inhibition of pollutants such as bacteria, viruses and allergens as well as deodorisation. A fresher and cleaner air awaits you.

1) Based on Panasonic Survey.
CZ-RTC5B and optional accessory CZ-CNEXU1 are required to use nanoe™ X function.

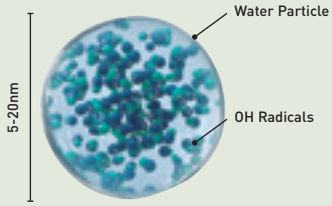

			Three Phase			
			7,1 kW	10,0 kW	12,5 kW	14,0 kW
KIT			**KIT-71PU2ZH8**	**KIT-100PU2ZH8**	**KIT-125PU2ZH8**	**KIT-140PU2ZH8**
Remote controller			**CZ-RTC5B**	**CZ-RTC5B**	**CZ-RTC5B**	**CZ-RTC5B**
Cooling capacity	Nominal (Min - Max)	kW	7,1 (2,2 ~ 9,0)	10,0 (3,1 ~ 12,5)	12,5 (3,2 ~ 14,0)	14,0 (3,3 ~ 16,0)
EER [1)]		W/W	4,06	4,41	3,80	3,41
SEER [2)]			**7,6 A++**	**7,7 A++**	**7,6**	**7,2**
Pdesign		kW	7,1	10,0	12,5	14,0
Input power cooling		kW	1,75	2,27	3,29	4,11
Annual energy consumption [3)]		kWh/a	327	455	—	—
Heating capacity	Nominal (Min - Max)	kW	8,0 (2,0 ~ 9,0)	11,2 (3,1 ~ 14,0)	14,0 (3,2 ~ 16,0)	16,0 (3,3 ~ 18,0)
COP [1)]		W/W	4,30	5,00	4,61	4,30
SCOP [2)]			**4,8 A++**	**4,9 A++**	**4,7**	**4,6**
Pdesign at -10 °C		kW	5,2	8,0	9,5	10,6
Input power heating		kW	1,86	2,24	3,04	3,72
Annual energy consumption [3)]		kWh/a	1517	2286	—	—
Indoor unit			**S-71PU2E5B**	**S-100PU2E5B**	**S-125PU2E5B**	**S-140PU2E5B**
Air volume	Hi / Med / Lo	m³/min	22,0 / 16,0 / 13,0	36,0 / 26,0 / 18,0	37,0 / 27,0 / 19,0	38,0 / 29,0 / 20,0
Sound pressure [4)]	Hi / Med / Lo	dB(A)	37 / 31 / 28	45 / 38 / 32	46 / 39 / 33	47 / 40 / 34
Dimension	Indoor (H x W x D)	mm	256 x 840 x 840	319 x 840 x 840	319 x 840 x 840	319 x 840 x 840
	Panel (H x W x D)	mm	33,5 x 950 x 950	33,5 x 950 x 950	33,5 x 950 x 950	33,5 x 950 x 950
Net weight	Indoor / Panel	kg	20 / 5	25 / 5	25 / 5	25 / 5
Outdoor unit			**U-71PZH2E8**	**U-100PZH2E8**	**U-125PZH2E8**	**U-140PZH2E8**
Power source		V	380 - 400 - 415	380 - 400 - 415	380 - 400 - 415	380 - 400 - 415
Current	Cool	A	2,75 - 2,65 - 2,55	3,50 - 3,35 - 3,20	5,15 - 4,90 - 4,70	6,45 - 6,15 - 5,90
	Heat	A	2,90 - 2,80 - 2,70	3,45 - 3,30 - 3,15	4,75 - 4,50 - 4,35	5,85 - 5,55 - 5,35
Air volume	Cool / Heat	m³/min	61 / 60	118 / 108	125 / 112	129 / 116
Sound pressure	Cool / Heat (Hi)	dB(A)	48 / 50	52 / 52	53 / 53	54 / 54
Sound power	Cool / Heat (Hi)	dB	65 / 67	69 / 69	70 / 70	71 / 71
Dimension	H x W x D	mm	996 x 940 x 340	1416 x 940 x 340	1416 x 940 x 340	1416 x 940 x 340
Net weight		kg	68	99	99	99
Piping connections	Liquid pipe	Inch (mm)	3/8 (9,52)	3/8 (9,52)	3/8 (9,52)	3/8 (9,52)
	Gas pipe	Inch (mm)	5/8 (15,88)	5/8 (15,88)	5/8 (15,88)	5/8 (15,88)
Pipe length range		m	5 ~ 50	5 ~ 85	5 ~ 85	5 ~ 85
Elevation difference (in/out) [5)]		m	30	30	30	30
Pipe length for additional gas		m	30	30	30	30
Additional gas amount		g/m	45	45	45	45
Refrigerant (R32) / CO_2 Eq.		kg / T	1,95 / 1,316	3,05 / 2,059	3,05 / 2,059	3,05 / 2,059
Operating range	Cool Min ~ Max	°C	-15 ~ +46	-20 [6)] ~ +46	-20 [6)] ~ +46	-20 [6)] ~ +46
	Heat Min ~ Max	°C	-20 ~ +24	-20 ~ +24	-20 ~ +24	-20 ~ +24

1) EER and COP calculation is based in accordance to EN14511. 2) Energy Label Scale from A+++ to D. For models below 12 kW, the SEER and SCOP is calculated based on values of EU/626/2011. For models above 12 kW, the SEER and SCOP is calculated based on values of EU/2281/2016. 3) The annual energy consumption is calculated in accordance to EU/626/2011. 4) The sound pressure of the units shows the value measured of the position 1,5 m below the unit. The sound pressure is measured in accordance with Eurovent 6/C/006-97 specification. 5) When installing the outdoor unit at a higher position than the indoor unit. 6) For models 100 ~ 140PZH2E5(8), it is possible to operate the lowest -20 °C in the computer rooms with the piping length of 30 m or less. * Recommended fuse for the indoor 3 A.

SEER and SCOP: For KIT-36PU2ZH5. ECONAVI and INTERNET CONTROL: Optional.
Compatible with all Panasonic connectivity solutions. For detailed information go to the Control Systems section.

Rating Conditions: Cooling Indoor 27°C DB / 19°C WB. Cooling Outdoor 35°C DB / 24°C WB. Heating Indoor 20°C DB. Heating Outdoor 7°C DB / 6°C WB. (DB: Dry Bulb; WB: Wet Bulb).
Specifications subject to change without notice. For detailed information about ErP / Energy Labelling, please visit our websites www.aircon.panasonic.eu or www.ptc.panasonic.eu.

PACi Standard 4 Way 90x90 Cassette Inverter+ • R32 refrigerant

Large capacity PACi. Trusted comfort and high efficiency

Thanks to advances in design and technology such as the high performance turbo fan which is more efficient and silent, and nanoe™ X Technology, the U2 Panasonic 4 way 90x90 Cassette offers high energy saving, fresh air and comfort.

CZ-RTC5B

CZ-KPU3W
Standard panel.

CZ-KPU3AW
Optional Econavi panel (CZ-RTC5B is required).

nanoe™X

CZ-CNEXU1
Optional nanoe X Generator Mark 1 kit (CZ-RTC5B is required).

CZ-RTC6
CZ-RTC6BL
Optional Controller.
Wired remote controller.

CZ-RWS3 +
CZ-RWRU3W
Optional Controller.
Infrared remote controller.

			Single Phase				
			6,0 kW	7,1 kW	10,0 kW	12,5 kW	14,0 kW
KIT			**KIT-60PU2Z5**	**KIT-71PU2Z5**	**KIT-100PU2Z5**	**KIT-125PU2Z5**	**KIT-140PU2Z5**
Remote controller			**CZ-RTC5B**	**CZ-RTC5B**	**CZ-RTC5B**	**CZ-RTC5B**	**CZ-RTC5B**
Cooling capacity	Nominal (Min - Max)	kW	6,0 (2,0 ~ 7,1)	7,1 (2,0 ~ 7,7)	10,0 (3,0 - 11,5)	12,5 (3,2 - 13,5)	14,0 (3,3 - 15,0)
EER [1]	Nominal (Min - Max)	W/W	4,00	3,50	3,82 (5,36 - 2,88)	3,58 (5,33 - 2,81)	3,23 (5,32 - 2,73)
SEER [2]			**7,6 A++**	**7,6 A++**	**6,8 A++**	**6,8**	**6,5**
Pdesign		kW	6,0	7,1	10,0	12,5	14,0
Input power cooling	Nominal (Min - Max)	kW	1,50	2,03	2,62 (0,56 - 4,00)	3,49 (0,60 - 4,80)	4,34 (0,62 - 5,50)
Annual energy consumption [3]		kWh/a	276	327	515	—	—
Heating capacity	Nominal (Min - Max)	kW	6,0 (1,8 ~ 7,0)	7,1 (1,8 ~ 8,1)	10,0 (3,0 - 14,0)	12,5 (3,3 - 15,0)	14,0 (3,4 - 16,0)
COP [1]	Nominal (Min - Max)	W/W	4,72	4,36	4,93 (3,59 - 5,36	4,43 (3,57 - 5,50	4,18 (3,33 - 5,48)
SCOP [2]			**4,7 A++**	**4,7 A++**	**4,4 A+**	**4,0**	**3,9**
Pdesign at -10 °C		kW	6,0	6,0	10,0	12,5	14,0
Input power heating	Nominal (Min - Max)	kW	1,27	1,63	2,03 (0,56 - 3,90)	2,82 (0,60 - 4,20)	3,35 (0,62 - 4,80)
Annual energy consumption [3]		kWh/a	1787	1787	3182	—	—
Indoor unit			**S-60PU2E5B**	**S-71PU2E5B**	**S-100PU2E5B**	**S-125PU2E5B**	**S-140PU2E5B**
Air volume	Hi / Med / Lo	m³/min	21,0 / 16,0 / 13,0	22,0 / 16,0 / 13,0	36,0 / 26,0 / 18,0	37,0 / 27,0 / 19,0	38,0 / 29,0 / 20,0
Moisture removal volume		L/h	1,7	2,5	2,7	4,8	6,0
Sound pressure [4]	Hi / Med / Lo	dB(A)	36 / 31 / 28	37 / 31 / 28	45 / 38 / 32	46 / 39 / 33	47 / 40 / 34
Sound power	Hi / Med / Lo	dB	51 / 46 / 43	52 / 46 / 43	60 / 53 / 47	61 / 54 / 48	62 / 55 / 49
Dimension	Indoor (H x W x D)	mm	256 x 840 x 840	256 x 840 x 840	319 x 840 x 840	319 x 840 x 840	319 x 840 x 840
	Panel (H x W x D)	mm	33,5 x 950 x 950	33,5 x 950 x 950	33,5 x 950 x 950	33,5 x 950 x 950	33,5 x 950 x 950
Net weight	Indoor / Panel	kg	20 / 5	20 / 5	25 / 5	25 / 5	25 / 5
Outdoor unit			**U-60PZ2E5**	**U-71PZ2E5**	**U-100PZ2E5**	**U-125PZ2E5**	**U-140PZ2E5**
Power source		V	220 - 230 - 240	220 - 230 - 240	220 - 230 - 240	220 - 230 - 240	220 - 230 - 240
Current	Cool	A	7,40 - 7,05 - 6,75	9,95 - 9,50 - 9,10	12,10 - 11,50 - 11,10	16,30 - 15,60 - 15,00	20,40 - 19,50 - 18,70
	Heat	A	6,25 - 5,95 - 5,70	8,05 - 7,70 - 7,35	9,25 - 8,85 - 8,50	13,10 - 12,60 - 12,00	15,60 - 15,00 - 14,30
Air volume	Cool / Heat	m³/min	40 / 45	50 / 45	76 / 70	86 / 78	89 / 83
Sound pressure	Cool / Heat (Hi)	dB(A)	46 / 48	49 / 49	52 / 52	55 / 55	56 / 56
Sound power	Cool / Heat (Hi)	dB	65 / 68	69 / 69	70 / 70	73 / 73	74 / 74
Dimension	H x W x D	mm	695 x 875 x 320	695 x 875 x 320	996 x 980 x 370	996 x 980 x 370	996 x 980 x 370
Net weight		kg	44	44	90	94	94
Piping connections	Liquid pipe	Inch (mm)	3/8 (9,52)	3/8 (9,52)	3/8 (9,52)	3/8 (9,52)	3/8 (9,52)
	Gas pipe	Inch (mm)	5/8 (15,88)	5/8 (15,88)	5/8 (15,88)	5/8 (15,88)	5/8 (15,88)
Pipe length range		m	3 ~ 40	3 ~ 40	5 ~ 50	5 ~ 50	5 ~ 50
Elevation difference (in/out) [5]		m	30	30	30	30	30
Pipe length for additional gas		m	30	30	30	30	30
Additional gas amount		g/m	35	35	45	45	45
Refrigerant (R32) / CO_2 Eq.		kg / T	1,45 / 0,979	1,45 / 0,979	2,60 / 1,755	2,98 / 2,0115	2,98 / 2,0115
Operating range	Cool Min ~ Max	°C	-10 ~ +43	-10 ~ +43	-10 ~ +43	-10 ~ +43	-10 ~ +43
	Heat Min ~ Max	°C	-15 ~ +24	-15 ~ +24	-15 ~ +24	-15 ~ +24	-15 ~ +24

Accessories	
CZ-RTC6	NEW Wired remote controller (non-wireless)
CZ-RTC6BL	NEW Wired remote controller with Bluetooth®
CZ-RTC5B	Wired remote controller with Econavi function and datanavi
CZ-RWS3 + CZ-RWRU3W	Infrared remote controller
CZ-CAPWFC1	Commercial WLAN Adaptor
CZ-KPU3AW	Econavi exclusive panel

Accessories	
CZ-CNEXU1	nanoe X Generator Mark 1 kit
PAW-WTRAY	Tray for condenser water compatible with outdoor elevation platform
PAW-GRDBSE20	Outdoor base ground support for noise and vibration absorption
PAW-GRDSTD40	Outdoor elevation platform 400 x 900 x 400 mm
CZ-CENSC1	Econavi energy savings sensor

Technical focus

- High performance turbo fan, path system for heat exchanger
- nanoe™ X that improves indoor air quality
- Econavi: Intelligent sensor to reduce waste of energy
- Datanavi simple support tool App with remote controller (CZ-RTC5B)
- Lower noise in slow fan operation
- Light weight, easy piping
- Drain pump included

Group control, circulation function

Circulating operation is activated when a room is unoccupied to evenly distribute air and minimize temperature gaps in both heating and cooling operation.

nanoe™ X deodorises and inhibits certain bacteria & viruses

nanoe X Generator Mark 1 produces 4,8 trillion[1)] OH radicals per second.
Greater amounts of OH radicals contained in nanoe™ X lead to outstanding effects in the inhibition of pollutants such as bacteria, viruses and allergens as well as deodorisation. A fresher and cleaner air awaits you.

1) Based on Panasonic Survey.
CZ-RTC5B and optional accessory CZ-CNEXU1 are required to use nanoe™ X function.

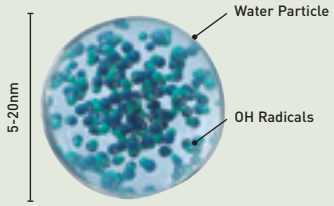

			Three Phase		
			10,0 kW	12,5 kW	14,0 kW
KIT			**KIT-100PU2Z8**	**KIT-125PU2Z8**	**KIT-140PU2Z8**
Remote controller			**CZ-RTC5B**	**CZ-RTC5B**	**CZ-RTC5B**
Cooling capacity	Nominal (Min - Max)	kW	10,0 (3,0 - 11,5)	12,5 (3,2 - 13,5)	14,0 (3,3 - 15,0)
EER [1)]	Nominal (Min - Max)	W/W	3,82 (5,36 - 2,88)	3,58 (5,33 - 2,81)	3,23 (5,32 - 2,73)
SEER [2)]			**6,7 A++**	**6,7**	**6,5**
Pdesign		kW	10,0	12,5	14,0
Input power cooling	Nominal (Min - Max)	kW	2,62 (0,56 - 4,00)	3,49 (0,60 - 4,80)	4,34 (0,62 - 5,50)
Annual energy consumption [3)]		kWh/a	521	—	—
Heating capacity	Nominal (Min - Max)	kW	10,0 (3,0 - 14,0)	12,5 (3,3 - 15,0)	14,0 (3,4 - 16,0)
COP [1)]	Nominal (Min - Max)	W/W	4,93 (3,59 - 5,36)	4,43 (3,57 - 5,50)	4,18 (3,33 - 5,48)
SCOP [2)]			**4,4 A+**	**4,0**	**3,9**
Pdesign at -10 °C		kW	10,0	12,5	14,0
Input power heating	Nominal (Min - Max)	kW	2,03 (0,56 - 3,90)	2,82 (0,60 - 4,20)	3,35 (0,62 - 4,80)
Annual energy consumption [3)]		kWh/a	3182	—	—
Indoor unit			**S-100PU2E5B**	**S-125PU2E5B**	**S-140PU2E5B**
Air volume	Hi / Med / Lo	m^3/min	36,0 / 26,0 / 18,0	37,0 / 27,0 / 19,0	38,0 / 29,0 / 20,0
Moisture removal volume		L/h	2,7	4,8	6,0
Sound pressure [4)]	Hi / Med / Lo	dB(A)	45 / 38 / 32	46 / 39 / 33	47 / 40 / 34
Sound power	Hi / Med / Lo	dB	60 / 53 / 47	61 / 54 / 48	62 / 55 / 49
Dimension	Indoor (H x W x D)	mm	319 x 840 x 840	319 x 840 x 840	319 x 840 x 840
	Panel (H x W x D)	mm	33,5 x 950 x 950	33,5 x 950 x 950	33,5 x 950 x 950
Net weight	Indoor / Panel	kg	25 / 5	25 / 5	25 / 5
Outdoor unit			**U-100PZ2E8**	**U-125PZ2E8**	**U-140PZ2E8**
Power source		V	380 - 400 - 415	380 - 400 - 415	380 - 400 - 415
Current	Cool	A	4,10 - 3,90 - 3,75	5,45 - 5,20 - 5,00	6,85 - 6,50 - 6,25
	Heat	A	3,15 - 3,00 - 2,90	4,40 - 4,15 - 4,00	5,25 - 4,95 - 4,80
Air volume	Cool / Heat	m^3/min	76 / 70	86 / 78	89 / 83
Sound pressure	Cool / Heat (Hi)	dB(A)	52 / 52	55 / 55	56 / 56
Sound power	Cool / Heat (Hi)	dB	70 / 70	73 / 73	74 / 74
Dimension	H x W x D	mm	996 x 980 x 370	996 x 980 x 370	996 x 980 x 370
Net weight		kg	90	94	94
Piping connections	Liquid pipe	Inch (mm)	3/8 (9,52)	3/8 (9,52)	3/8 (9,52)
	Gas pipe	Inch (mm)	5/8 (15,88)	5/8 (15,88)	5/8 (15,88)
Pipe length range		m	5 ~ 50	5 ~ 50	5 ~ 50
Elevation difference (in/out) [5)]		m	30	30	30
Pipe length for additional gas		m	30	30	30
Additional gas amount		g/m	45	45	45
Refrigerant (R32) / CO_2 Eq.		kg / T	2,60 / 1,755	2,98 / 2,0115	2,98 / 2,0115
Operating range	Cool Min ~ Max	°C	-10 ~ +43	-10 ~ +43	-10 ~ +43
	Heat Min ~ Max	°C	-15 ~ +24	-15 ~ +24	-15 ~ +24

1) EER and COP calculation is based in accordance to EN14511. 2) Energy Label Scale from A+++ to D. For models below 12 kW, the SEER and SCOP is calculated based on values of EU/626/2011. For models above 12 kW, the SEER and SCOP is calculated based on values of EU/2281/2016. 3) The annual energy consumption is calculated in accordance to EU/626/2011. 4) The sound pressure of the units shows the value measured of the position 1,5 m below the unit. The sound pressure is measured in accordance with Eurovent 6/C/006-97 specification. 5) When installing the outdoor unit at a higher position than the indoor unit. * Recommended fuse for the indoor 3 A.

SEER and SCOP: For KIT-60PU2Z5 and KIT-71PU2Z5. ECONAVI and INTERNET CONTROL: Optional.
Compatible with all Panasonic connectivity solutions. For detailed information go to the Control Systems section.

Rating Conditions: Cooling Indoor 27°C DB / 19°C WB. Cooling Outdoor 35°C DB / 24°C WB. Heating Indoor 20°C DB. Heating Outdoor 7°C DB / 6°C WB. (DB: Dry Bulb; WB: Wet Bulb).
Specifications subject to change without notice. For detailed information about ErP / Energy Labelling, please visit our websites www.aircon.panasonic.eu or www.ptc.panasonic.eu.

PACi Elite Ceiling Inverter+
• R32 refrigerant

Ceiling mounted units provide large and wide air distribution which is good for big rooms

The height and depth of all capacities are the same for unified appearance in mixed installations.

CZ-RTC5B

CZ-RTC6
CZ-RTC6BL
Optional Controller.
Wired remote controller.

CZ-RWS3 +
CZ-RWRT3
Optional Controller.
Infrared remote controller.

CZ-CENSC1
Optional Econavi Sensor.

			Single Phase						
			3,6 kW	5,0 kW	6,0 kW	7,1 kW	10,0 kW	12,5 kW	14,0 kW
KIT			**KIT-36PT2ZH5**	**KIT-50PT2ZH5**	**KIT-60PT2ZH5**	**KIT-71PT2ZH5**	**KIT-100PT2ZH5**	**KIT-125PT2ZH5**	**KIT-140PT2ZH5**
Remote controller			**CZ-RTC5B**	**CZ-RTC5B**	**CZ-RTC5B**	**CZ-RTC5B**	**CZ-RTC5B**	**CZ-RTC5B**	**CZ-RTC5B**
Cooling capacity	Nominal (Min - Max)	kW	3,6 (1,5 - 4,0)	5,0 (1,5 - 5,6)	6,0 (2,0 - 7,1)	7,1 (2,2 - 9,0)	10,0 (3,1 - 12,5)	12,5 (3,2 - 14,0)	14,0 (3,3 - 16,0)
EER [1]		W/W	5,07	4,17	4,08	3,78	4,05	3,45	3,10
SEER [2]			**7,2 A++**	**7,0 A++**	**7,2 A++**	**6,7 A++**	**7,0 A++**	**6,6**	**6,2**
Pdesign		kW	3,6	5,0	6,0	7,1	10,0	12,5	14,0
Input power cooling		kW	0,71	1,20	1,47	1,88	2,47	3,62	4,52
Annual energy consumption [3]		kWh/a	175	250	292	371	500	—	—
Heating capacity	Nominal (Min - Max)	kW	4,0 (1,5 - 5,0)	5,6 (1,5 - 6,5)	7,0 (1,8 - 8,0)	8,0 (2,0 - 9,0)	11,2 (3,1 - 14,0)	14,0 (3,2 - 16,0)	16,0 (3,3 - 18,0)
COP [1]		W/W	5,19	4,34	4,43	4,15	4,31	3,99	3,67
SCOP [2]			**4,8 A++**	**4,6 A++**	**4,7 A++**	**4,6 A++**	**4,6 A++**	**4,4**	**4,3**
Pdesign at -10 °C		kW	3,6	4,5	6,0	5,2	8,0	9,5	10,6
Input power heating		kW	0,77	1,29	1,58	1,93	2,60	3,51	4,36
Annual energy consumption [3]		kWh/a	1050	1370	1787	1583	2435	—	—
Indoor unit			**S-36PT2E5B**	**S-50PT2E5B**	**S-60PT2E5B**	**S-71PT2E5B**	**S-100PT2E5B**	**S-125PT2E5B**	**S-140PT2E5B**
Air volume	Hi / Med / Lo	m³/min	14,0 / 12,0 / 10,5	15,0 / 12,5 / 10,5	20,0 / 17,0 / 14,5	21,0 / 18,0 / 15,5	30,0 / 25,0 / 23,0	34,0 / 28,0 / 24,0	35,0 / 29,0 / 25,0
Sound pressure [4]	Hi / Med / Lo	dB(A)	36 / 32 / 29	37 / 33 / 29	38 / 34 / 30	39 / 35 / 31	42 / 37 / 35	46 / 40 / 36	47 / 41 / 37
Dimension	H x W x D	mm	235 x 960 x 690	235 x 960 x 690	235 x 1275 x 690	235 x 1275 x 690	235 x 1590 x 690	235 x 1590 x 690	235 x 1590 x 690
Net weight		kg	27	27	33	33	40	40	40
Outdoor unit			**U-36PZH2E5**	**U-50PZH2E5**	**U-60PZH2E5**	**U-71PZH2E5**	**U-100PZH2E5**	**U-125PZH2E5**	**U-140PZH2E5**
Power source		V	220 - 230 - 240	220 - 230 - 240	220 - 230 - 240	220 - 230 - 240	220 - 230 - 240	220 - 230 - 240	220 - 230 - 240
Current	Cool	A	3,35 - 3,25 - 3,10	5,60 - 5,35 - 5,10	7,15 - 6,85 - 6,55	8,80 - 8,45 - 8,10	11,40-10,90-10,50	16,80-16,00-15,40	21,00-20,10-19,30
	Heat	A	3,65 - 3,50 - 3,35	6,10 - 5,85 - 5,60	7,75 - 7,40 - 7,10	8,90 - 8,50 - 8,20	12,00-11,50-11,00	16,20-15,50-14,90	20,30-19,40-18,60
Air volume	Cool / Heat	m³/min	40 / 40	40 / 45	40 / 45	61 / 60	118 / 108	125 / 122	129 / 116
Sound pressure	Cool / Heat (Hi)	dB(A)	43 / 44	45 / 48	46 / 49	48 / 50	52 / 52	53 / 53	54 / 54
Sound power	Cool / Heat (Hi)	dB	62 / 64	64 / 68	65 / 69	65 / 67	69 / 69	70 / 70	71 / 71
Dimension	H x W x D	mm	695 x 875 x 320	695 x 875 x 320	695 x 875 x 320	996 x 940 x 340	1416 x 940 x 340	1416 x 940 x 340	1416 x 940 x 340
Net weight		kg	43	43	44	68	99	99	99
Piping connections	Liquid pipe	Inch (mm)	1/4 (6,35)	1/4 (6,35)	3/8 (9,52)	3/8 (9,52)	3/8 (9,52)	3/8 (9,52)	3/8 (9,52)
	Gas pipe	Inch (mm)	1/2 (12,70)	1/2 (12,70)	5/8 (15,88)	5/8 (15,88)	5/8 (15,88)	5/8 (15,88)	5/8 (15,88)
Pipe length range		m	3 ~ 40	3 ~ 40	3 ~ 40	5 ~ 50	5 ~ 85	5 ~ 85	5 ~ 85
Elevation difference (in/out) [5]		m	30	30	30	30	30	30	30
Pipe length for additional gas		m	30	30	30	30	30	30	30
Additional gas amount		g/m	20	20	35	45	45	45	45
Refrigerant (R32) / CO_2 Eq.		kg / T	1,15 / 0,776	1,15 / 0,776	1,45 / 0,979	1,95 / 1,316	3,05 / 2,059	3,05 / 2,059	3,05 / 2,059
Operating range	Cool Min ~ Max	°C	-15 ~ +46	-15 ~ +46	-15 ~ +46	-15 ~ +46	-20 [6] ~ +46	-20 [6] ~ +46	-20 [6] ~ +46
	Heat Min ~ Max	°C	-20 ~ +24	-20 ~ +24	-20 ~ +24	-20 ~ +24	-20 ~ +24	-20 ~ +24	-20 ~ +24

Accessories	
CZ-RTC6	NEW Wired remote controller (non-wireless)
CZ-RTC6BL	NEW Wired remote controller with Bluetooth®
CZ-RTC5B	Wired remote controller with Econavi function and datanavi
CZ-RWS3 + CZ-RWRT3	Infrared remote controller
CZ-CAPWFC1	Commercial WLAN Adaptor

Accessories	
PAW-WTRAY	Tray for condenser water compatible with outdoor elevation platform
PAW-GRDBSE20	Outdoor base ground support for noise and vibration absorption
PAW-GRDSTD40	Outdoor elevation platform 400 x 900 x 400 mm
CZ-CENSC1	Econavi energy savings sensor

Technical focus

- Wide air distribution for large rooms
- Horizontal air flow reaches maximum 9,5 m
- Fresh air connection available on the unit
- Slim design with 235 m height fits narrow space
- Silent operation
- Datanavi simple support tool App with remote controller (CZ-RTC5B)
- Twin, Triple and Double-twin split options
- Easy connection and control of external fan or ERV using the connector PAW-FDC on the indoor unit PCB. The external device can be controlled by the remote control of the Panasonic indoor unit

Air distribution is altered depending on the operational mode

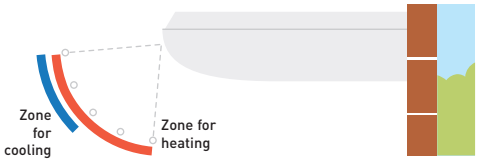

Further comfort improvement with airflow distribution

Horizontal air flow reaches maximum 9,5 m. This is ideal for wide rooms.
The wide air discharge opening expands the air flow to the left and the right. The unpleasant feeling caused when the air flow directly hits the human body is prevented by the "Draft prevention position", which changes the swing width, so that the degree of comfort is increased.

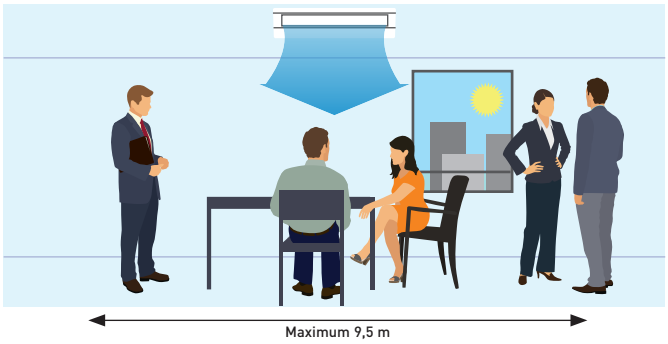

			Three Phase			
			7,1 kW	10,0 kW	12,5 kW	14,0 kW
KIT			**KIT-71PT2ZH8**	**KIT-100PT2ZH8**	**KIT-125PT2ZH8**	**KIT-140PT2ZH8**
Remote controller			**CZ-RTC5B**	**CZ-RTC5B**	**CZ-RTC5B**	**CZ-RTC5B**
Cooling capacity	Nominal (Min - Max)	kW	7,1 (2,2 - 9,0)	10,0 (3,1 - 12,5)	12,5 (3,2 - 14,0)	14,0 (3,3 - 16,0)
EER [1]		W/W	3,78	4,05	3,45	3,10
SEER [2]			**6,6 A++**	**6,9 A++**	**6,6**	**6,2**
Pdesign		kW	7,1	10,0	12,5	14,0
Input power cooling		kW	1,88	2,47	3,62	4,52
Annual energy consumption [3]		kWh/a	375	507	—	—
Heating capacity	Nominal (Min - Max)	kW	8,0 (2,0 - 9,0)	11,2 (3,1 - 14,0)	14,0 (3,2 - 16,0)	16,0 (3,3 - 18,0)
COP [1]		W/W	4,15	4,31	3,99	3,67
SCOP [2]			**4,6 A++**	**4,6 A++**	**4,4**	**4,3**
Pdesign at -10 °C		kW	5,2	8,0	9,5	10,6
Input power heating		kW	1,93	2,60	3,51	4,36
Annual energy consumption [3]		kWh/a	1583	2435	—	—
Indoor unit			**S-71PT2E5B**	**S-100PT2E5B**	**S-125PT2E5B**	**S-140PT2E5B**
Air volume	Hi / Med / Lo	m³/min	21,0 / 18,0 / 15,5	30,0 / 25,0 / 23,0	34,0 / 28,0 / 24,0	35,0 / 29,0 / 25,0
Sound pressure [4]	Hi / Med / Lo	dB(A)	39 / 35 / 31	42 / 37 / 35	46 / 40 / 36	47 / 41 / 37
Dimension	H x W x D	mm	235 x 1275 x 690	235 x 1590 x 690	235 x 1590 x 690	235 x 1590 x 690
Net weight		kg	33	40	40	40
Outdoor unit			**U-71PZH2E8**	**U-100PZH2E8**	**U-125PZH2E8**	**U-140PZH2E8**
Power source		V	380 - 400 - 415	380 - 400 - 415	380 - 400 - 415	380 - 400 - 415
Current	Cool	A	2,95 - 2,85 - 2,75	3,85 - 3,65 - 3,55	5,65 - 5,40 - 5,20	7,10 - 6,75 - 6,50
	Heat	A	3,00 - 2,90 - 2,80	4,05 - 3,85 - 3,75	5,50 - 5,20 - 5,05	6,85 - 6,50 - 6,30
Air volume	Cool / Heat	m³/min	61 / 60	118 / 108	125 / 112	129 / 116
Sound pressure	Cool / Heat (Hi)	dB(A)	48 / 50	52 / 52	53 / 53	54 / 54
Sound power	Cool / Heat (Hi)	dB	65 / 67	69 / 69	70 / 70	71 / 71
Dimension	H x W x D	mm	996 x 940 x 340	1416 x 940 x 340	1416 x 940 x 340	1416 x 940 x 340
Net weight		kg	68	99	99	99
Piping connections	Liquid pipe	Inch (mm)	3/8 (9,52)	3/8 (9,52)	3/8 (9,52)	3/8 (9,52)
	Gas pipe	Inch (mm)	5/8 (15,88)	5/8 (15,88)	5/8 (15,88)	5/8 (15,88)
Pipe length range		m	5 ~ 50	5 ~ 85	5 ~ 85	5 ~ 85
Elevation difference (in/out) [5]		m	30	30	30	30
Pipe length for additional gas		m	30	30	30	30
Additional gas amount		g/m	45	45	45	45
Refrigerant (R32) / CO_2 Eq.		kg / T	1,95 / 1,316	3,05 / 2,059	3,05 / 2,059	3,05 / 2,059
Operating range	Cool Min ~ Max	°C	-15 ~ +46	-20 [6] ~ +46	-20 [6] ~ +46	-20 [6] ~ +46
	Heat Min ~ Max	°C	-20 ~ +24	-20 ~ +24	-20 ~ +24	-20 ~ +24

1) EER and COP calculation is based in accordance to EN14511. 2) Energy Label Scale from A+++ to D. For models below 12 kW, the SEER and SCOP is calculated based on values of EU/626/2011. For models above 12 kW, the SEER and SCOP is calculated based on values of EU/2281/2016. 3) The annual energy consumption is calculated in accordance to EU/626/2011. 4) The sound pressure of the units shows the value measured of the position 1 m in front of the main body and 1 m below the unit. The sound pressure is measured in accordance with Eurovent 6/C/006-97 specification. 5) When installing the outdoor unit at a higher position than the indoor unit. 6) For models 100 ~ 140PZH2E5(8), it is possible to operate the lowest -20 °C in the computer rooms with the piping length of 30 m or less. * Recommended fuse for the indoor 3 A.

R32 | A++ 7,2 SEER | A++ 4,8 SCOP | INVERTER+ | -15°C COOLING MODE | -20°C HEATING MODE | R22 R410A R32 R22/R410A RENEWAL | OPTIONAL WLAN | BMS CONNECTIVITY | 5 YEARS COMPRESSOR WARRANTY

SEER and SCOP: For KIT-36PT2ZH5. INTERNET CONTROL: Optional.
Compatible with all Panasonic connectivity solutions. For detailed information go to the Control Systems section.

Rating Conditions: Cooling Indoor 27°C DB / 19°C WB. Cooling Outdoor 35°C DB / 24°C WB. Heating Indoor 20°C DB. Heating Outdoor 7°C DB / 6°C WB. (DB: Dry Bulb; WB: Wet Bulb).
Specifications subject to change without notice. For detailed information about ErP / Energy Labelling, please visit our websites www.aircon.panasonic.eu or www.ptc.panasonic.eu.

PACi Standard Ceiling Inverter+
• R32 refrigerant

Ceiling mounted units provide large and wide air distribution which is good for big rooms

The height and depth of all capacities are the same for unified appearance in mixed installations.

CZ-RTC5B

CZ-RTC6
CZ-RTC6BL
Optional Controller.
Wired remote controller.

CZ-RWS3 +
CZ-RWRT3
Optional Controller.
Infrared remote controller.

CZ-CENSC1
Optional Econavi Sensor.

			Single Phase				
			6,0 kW	**7,1 kW**	**10,0 kW**	**12,5 kW**	**14,0 kW**
KIT			**KIT-60PT2Z5**	**KIT-71PT2Z5**	**KIT-100PT2Z5**	**KIT-125PT2Z5**	**KIT-140PT2Z5**
Remote controller			**CZ-RTC5B**	**CZ-RTC5B**	**CZ-RTC5B**	**CZ-RTC5B**	**CZ-RTC5B**
Cooling capacity	Nominal (Min - Max)	kW	6,0 (2,0 ~ 7,1)	7,1 (2,0 ~ 7,7)	10,0 (3,0 - 11,5)	12,5 (3,2 - 13,5)	14,0 (3,3 - 15,0)
EER [1]	Nominal (Min - Max)	W/W	4,00	3,55	3,64 (5,36 - 2,80)	3,32 (5,33 - 2,77)	2,98 (5,32 - 2,73)
SEER [2]			**6,8 A++**	**6,5 A++**	**6,5 A++**	**5,8**	**5,5**
Pdesign		kW	6,0	7,1	10,0	12,5	14,0
Input power cooling	Nominal (Min - Max)	kW	1,50	2,00	2,75 (0,56 - 4,10)	3,76 (0,60 - 4,88)	4,70 (0,62 - 5,50)
Annual energy consumption [3]		kWh/a	309	382	535	1300	1530
Heating capacity	Nominal (Min - Max)	kW	6,0 (1,8 ~ 7,0)	7,1 (1,8 ~ 8,1)	10,0 (3,0 - 14,0)	12,5 (3,3 - 15,0)	14,0 (3,4 - 16,0)
COP [1]	Nominal (Min - Max)	W/W	4,80	4,41	4,24 (5,36 - 3,50)	3,89 (4,52 - 3,41)	3,70 (5,48 - 3,08)
SCOP [2]			**4,6 A++**	**4,3 A+**	**4,2 A+**	**3,8**	**3,7**
Pdesign at -10 °C		kW	6,0	6,0	10,0	12,5	13,6
Input power heating	Nominal (Min - Max)	kW	1,25	1,62	2,36 (0,56 - 4,00)	3,21 (0,73 - 4,40)	3,78 (0,62 - 5,20)
Annual energy consumption [3]		kWh/a	1826	1953	3324	4669	5153
Indoor unit			**S-60PT2E5B**	**S-71PT2E5B**	**S-100PT2E5B**	**S-125PT2E5B**	**S-140PT2E5B**
Air volume	Hi / Med / Lo	m³/min	20,0 / 17,0 / 14,5	21,0 / 18,0 / 15,5	30 / 25 / 23	34 / 28 / 24	35 / 29 / 25
Moisture removal volume		L/h	3,4	4,2	6,0	7,9	9,0
Sound pressure [4]	Hi / Med / Lo	dB(A)	38/34/30	39/35/31	42 / 37 / 35	46 / 40 / 36	47 / 41 / 37
Sound power	Hi / Med / Lo	dB	56/52/48	57/53/49	60 / 55 / 53	64 / 58 / 54	65 / 59 / 55
Dimension	H x W x D	mm	235 x 1275 x 690	235 x 1275 x 690	235 x 1590 x 690	235 x 1590 x 690	235 x 1590 x 690
Net weight		kg	33	33	40	40	40
Outdoor unit			**U-60PZ2E5**	**U-71PZ2E5**	**U-100PZ2E5**	**U-125PZ2E5**	**U-140PZ2E5**
Power source		V	220 - 230 - 240	220 - 230 - 240	220 - 230 - 240	220 - 230 - 240	220 - 230 - 240
Current	Cool	A	7,30 - 7,00 - 6,70	9,70 - 9,30 - 8,90	12,80 - 12,20 - 11,70	17,60 - 16,90 - 16,20	22,10 - 21,20 - 20,30
	Heat	A	6,05 - 5,80 - 5,55	7,85 - 7,50 - 7,20	10,90 - 10,40 - 10,00	15,00 - 14,30 - 13,70	17,70 - 16,90 - 16,20
Air volume	Cool / Heat	m³/min	40 / 45	50 / 45	76 / 70	86 / 78	89 / 83
Sound pressure	Cool / Heat (Hi)	dB(A)	46 / 48	49 / 49	52 / 52	55 / 55	56 / 56
Sound power	Cool / Heat (Hi)	dB	65 / 68	69 / 69	70 / 70	73 / 73	74 / 74
Dimension	H x W x D	mm	695 x 875 x 320	695 x 875 x 320	996 x 980 x 370	996 x 980 x 370	996 x 980 x 370
Net weight		kg	44	44	90	94	94
Piping connections	Liquid pipe	Inch (mm)	3/8 (9,52)	3/8 (9,52)	3/8 (9,52)	3/8 (9,52)	3/8 (9,52)
	Gas pipe	Inch (mm)	5/8 (15,88)	5/8 (15,88)	5/8 (15,88)	5/8 (15,88)	5/8 (15,88)
Pipe length range		m	3 ~ 40	3 ~ 40	5 ~ 50	5 ~ 50	5 ~ 50
Elevation difference (in/out) [5]		m	30	30	30	30	30
Pipe length for additional gas		m	30	30	30	30	30
Additional gas amount		g/m	35	35	45	45	45
Refrigerant (R32) / CO_2 Eq.		kg / T	1,45 / 0,979	1,45 / 0,979	2,60 / 1,755	2,98 / 2,0115	2,98 / 2,0115
Operating range	Cool Min ~ Max	°C	-10 ~ +43	-10 ~ +43	-10 ~ +43	-10 ~ +43	-10 ~ +43
	Heat Min ~ Max	°C	-15 ~ +24	-15 ~ +24	-15 ~ +24	-15 ~ +24	-15 ~ +24

Accessories	
CZ-RTC6	NEW Wired remote controller (non-wireless)
CZ-RTC6BL	NEW Wired remote controller with Bluetooth®
CZ-RTC5B	Wired remote controller with Econavi function and datanavi
CZ-RWS3 + CZ-RWRT3	Infrared remote controller
CZ-CAPWFC1	Commercial WLAN Adaptor

Accessories	
PAW-WTRAY	Tray for condenser water compatible with outdoor elevation platform
PAW-GRDBSE20	Outdoor base ground support for noise and vibration absorption
PAW-GRDSTD40	Outdoor elevation platform 400 x 900 x 400 mm
CZ-CENSC1	Econavi energy savings sensor

Technical focus

- Wide air distribution for large rooms
- Horizontal air flow reaches maximum 9,5 m
- Fresh air connection available on the unit
- Slim design with 235 m height fits narrow space
- Silent operation
- Datanavi simple support tool App with remote controller (CZ-RTC5B)
- Twin, Triple and Double-twin split options
- Easy connection and control of external fan or ERV using the connector PAW-FDC on the indoor unit PCB. The external device can be controlled by the remote control of the Panasonic indoor unit

Air distribution is altered depending on the operational mode

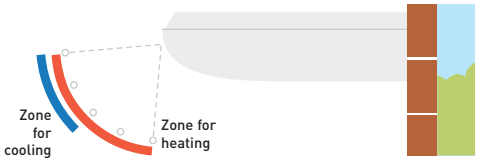

Further comfort improvement with airflow distribution

Horizontal air flow reaches maximum 9,5 m. This is ideal for wide rooms.
The wide air discharge opening expands the air flow to the left and the right. The unpleasant feeling caused when the air flow directly hits the human body is prevented by the "Draft prevention position", which changes the swing width, so that the degree of comfort is increased.

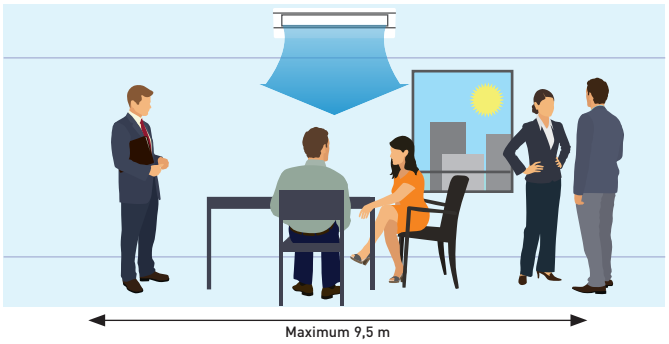

			Three Phase		
			10,0 kW	12,5 kW	14,0 kW
KIT			**KIT-100PT2Z8**	**KIT-125PT2Z8**	**KIT-140PT2Z8**
Remote controller			**CZ-RTC5B**	**CZ-RTC5B**	**CZ-RTC5B**
Cooling capacity	Nominal (Min - Max)	kW	10,0 (3,0 - 11,5)	12,5 (3,2 - 13,5)	14,0 (3,3 - 15,0)
EER [1]	Nominal (Min - Max)	W/W	3,64 (5,36 - 2,80)	3,32 (5,33 - 2,77)	2,98 (5,32 - 2,73)
SEER [2]			**6,5 A++**	**5,8**	**5,5**
Pdesign		kW	10,0	12,5	14,0
Input power cooling	Nominal (Min - Max)	kW	2,75 (0,56 - 4,10)	3,76 (0,60 - 4,88)	4,70 (0,62 - 5,50)
Annual energy consumption [3]		kWh/a	538	1304	1534
Heating capacity	Nominal (Min - Max)	kW	10,0 (3,0 - 14,0)	12,5 (3,3 - 15,0)	14,0 (3,4 - 16,0)
COP [1]	Nominal (Min - Max)	W/W	4,24 (5,36 - 3,50)	3,89 (4,52 - 3,41)	3,70 (5,48 - 3,08)
SCOP [2]			**4,2 A+**	**3,8**	**3,7**
Pdesign at -10 °C		kW	10,0	12,5	13,6
Input power heating	Nominal (Min - Max)	kW	2,36 (0,56 - 4,00)	3,21 (0,73 - 4,40)	3,78 (0,62 - 5,20)
Annual energy consumption [3]		kWh/a	3324	4669	5153
Indoor unit			**S-100PT2E5B**	**S-125PT2E5B**	**S-140PT2E5B**
Air volume	Hi / Med / Lo	m³/min	30 / 25 / 23	34 / 28 / 24	35 / 29 / 25
Moisture removal volume		L/h	6,0	7,9	9,0
Sound pressure [4]	Hi / Med / Lo	dB(A)	42 / 37 / 35	46 / 40 / 36	47 / 41 / 37
Sound power	Hi / Med / Lo	dB	60 / 55 / 53	64 / 58 / 54	65 / 59 / 55
Dimension	H x W x D	mm	235 x 1590 x 690	235 x 1590 x 690	235 x 1590 x 690
Net weight		kg	40	40	40
Outdoor unit			**U-100PZ2E8**	**U-125PZ2E8**	**U-140PZ2E8**
Power source		V	380 - 400 - 415	380 - 400 - 415	380 - 400 - 415
Current	Cool	A	4,37 - 4,15 - 4,00	5,90 - 5,60 - 5,40	7,40 - 7,05 - 6,80
	Heat	A	3,72 - 3,55 - 3,40	5,00 - 4,75 - 4,60	5,90 - 5,60 - 5,40
Air volume	Cool / Heat	m³/min	76 / 70	86 / 78	89 / 83
Sound pressure	Cool / Heat (Hi)	dB(A)	52 / 52	55 / 55	56 / 56
Sound power	Cool / Heat (Hi)	dB	70 / 70	73 / 73	74 / 74
Dimension	H x W x D	mm	996 x 980 x 370	996 x 980 x 370	996 x 980 x 370
Net weight		kg	90	94	94
Piping connections	Liquid pipe	Inch (mm)	3/8 (9,52)	3/8 (9,52)	3/8 (9,52)
	Gas pipe	Inch (mm)	5/8 (15,88)	5/8 (15,88)	5/8 (15,88)
Pipe length range		m	5 ~ 50	5 ~ 50	5 ~ 50
Elevation difference (in/out) [5]		m	30	30	30
Pipe length for additional gas		m	30	30	30
Additional gas amount		g/m	45	45	45
Refrigerant (R32) / CO_2 Eq.		kg / T	2,60 / 1,755	2,98 / 2,0115	2,98 / 2,0115
Operating range	Cool Min ~ Max	°C	-10 ~ +43	-10 ~ +43	-10 ~ +43
	Heat Min ~ Max	°C	-15 ~ +24	-15 ~ +24	-15 ~ +24

1) EER and COP calculation is based in accordance to EN14511. 2) Energy Label Scale from A+++ to D. For models below 12 kW, the SEER and SCOP is calculated based on values of EU/626/2011. For models above 12 kW, the SEER and SCOP is calculated based on values of EU/2281/2016. 3) The annual energy consumption is calculated in accordance to EU/626/2011. 4) The sound pressure of the units shows the value measured of the position 1 m in front of the main body and 1 m below the unit. The sound pressure is measured in accordance with Eurovent 6/C/006-97 specification. 5) When installing the outdoor unit at a higher position than the indoor unit. * Recommended fuse for the indoor 3 A.

R32 | A++ 6,8 SEER | A++ 4,6 SCOP | INVERTER+ | -10°C COOLING MODE | -15°C HEATING MODE | R22 R410A R32 R22/R410A RENEWAL | OPTIONAL WLAN | BMS CONNECTIVITY | 5 YEARS COMPRESSOR WARRANTY

SEER and SCOP: For KIT-60PT2Z5. INTERNET CONTROL: Optional.
Compatible with all Panasonic connectivity solutions. For detailed information go to the Control Systems section.

Rating Conditions: Cooling Indoor 27°C DB / 19°C WB. Cooling Outdoor 35°C DB / 24°C WB. Heating Indoor 20°C DB. Heating Outdoor 7°C DB / 6°C WB. (DB: Dry Bulb; WB: Wet Bulb).
Specifications subject to change without notice. For detailed information about ErP / Energy Labelling, please visit our websites www.aircon.panasonic.eu or www.ptc.panasonic.eu.

PACi Elite High Static Pressure Hide Away Inverter+ • R32 refrigerant

The ducted systems are the ideal solution for flexible, concealed air conditioning and the optional 200 mm spigots ensure simple, hassle-free connection to spiral ductwork.

CZ-RTC5B

CZ-RTC6
CZ-RTC6BL
Optional Controller.
Wired remote controller.

CZ-RWS3 +
CZ-RWRC3
Optional Controller.
Infrared remote controller.

CZ-CENSC1
Optional Econavi Sensor.

			Single Phase						
			3,6 kW	5,0 kW	6,0 kW	7,1 kW	10,0 kW	12,5 kW	14,0 kW
KIT			**KIT-36PF1ZH5**	**KIT-50PF1ZH5**	**KIT-60PF1ZH5**	**KIT-71PF1ZH5**	**KIT-100PF1ZH5**	**KIT-125PF1ZH5**	**KIT-140PF1ZH5**
Remote controller			**CZ-RTC5B**	**CZ-RTC5B**	**CZ-RTC5B**	**CZ-RTC5B**	**CZ-RTC5B**	**CZ-RTC5B**	**CZ-RTC5B**
Cooling capacity	Nominal (Min - Max)	kW	3,6 (1,5 - 4,0)	5,0 (1,5 - 5,6)	6,0 (2,0 - 7,1)	7,1 (2,2 - 9,0)	10,0 (3,1 - 12,5)	12,5 (3,2 - 14,0)	14,0 (3,3 - 16,0)
EER [1]		W/W	4,74	4,03	3,68	3,84	4,13	3,52	3,26
SEER [2]			**6,1 A++**	**5,9 A+**	**6,4 A++**	**6,5 A++**	**6,2 A++**	**5,9**	**5,7**
Pdesign		kW	3,6	5,0	6,0	7,1	10,0	12,5	14,0
Input power cooling		kW	0,76	1,24	1,63	1,85	2,42	3,55	4,30
Annual energy consumption [3]		kWh/a	207	297	328	382	564	—	—
Heating capacity	Nominal (Min - Max)	kW	4,0 (1,5 - 5,0)	5,6 (1,5 - 6,5)	7,0 (1,8 - 8,0)	8,0 (2,0 - 9,0)	11,2 (3,1 - 14,0)	14,0 (3,2 - 16,0)	16,0 (3,3 - 18,0)
COP [1]		W/W	4,76	4,18	4,14	4,00	4,31	4,02	3,65
SCOP [2]			**4,3 A+**	**4,2 A+**	**4,3 A+**	**4,6 A++**	**4,4 A+**	**4,3**	**4,2**
Pdesign at -10 °C		kW	3,6	4,0	6,0	5,2	8,0	9,5	10,6
Input power heating		kW	0,84	1,34	1,69	2,00	2,60	3,48	4,38
Annual energy consumption [3]		kWh/a	1172	1500	1953	1582	2545	—	—
Indoor unit			**S-36PF1E5B**	**S-50PF1E5B**	**S-60PF1E5B**	**S-71PF1E5B**	**S-100PF1E5B**	**S-125PF1E5B**	**S-140PF1E5B**
External static pressure [4]	Nominal (Min - Max)	Pa	70 (10 - 150)	70 (10 - 150)	70 (10 - 150)	70 (10 - 150)	100 (10 - 150)	100 (10 - 150)	100 (10 - 150)
Air volume	Hi / Med / Lo	m³/min	14,0 / 13,0 / 10,0	16,0 / 15,0 / 12,0	21,0 / 19,0 / 15,0	21,0 / 19,0 / 15,0	32,0 / 26,0 / 21,0	34,0 / 29,0 / 23,0	36,0 / 32,0 / 25,0
Sound pressure [5]	Hi / Med / Lo	dB(A)	33 / 29 / 25	34 / 30 / 26	35 / 32 / 26	35 / 32 / 26	38 / 34 / 31	39 / 35 / 32	40 / 36 / 33
Dimension	H x W x D	mm	290 x 800 x 700	290 x 800 x 700	290 x 1000 x 700	290 x 1000 x 700	290 x 1400 x 700	290 x 1400 x 700	290 x 1400 x 700
Net weight		kg	28	28	33	33	45	45	45
Outdoor unit			**U-36PZH2E5**	**U-50PZH2E5**	**U-60PZH2E5**	**U-71PZH2E5**	**U-100PZH2E5**	**U-125PZH2E5**	**U-140PZH2E5**
Power source		V	220 - 230 - 240	220 - 230 - 240	220 - 230 - 240	220 - 230 - 240	220 - 230 - 240	220 - 230 - 240	220 - 230 - 240
Current	Cool	A	3,45 - 3,30 - 3,15	5,50 - 5,25 - 5,05	7,65 - 7,30 - 7,00	8,35 - 8,00 - 7,65	10,60 - 10,20 - 9,75	15,90 - 15,20 - 14,60	19,50 - 18,60 - 17,80
	Heat	A	3,85 - 3,70 - 3,55	6,05 - 5,80 - 5,55	7,95 - 7,60 - 7,25	8,90 - 8,50 - 8,25	11,50 - 11,00 - 10,50	15,60 - 14,90 - 14,30	19,90 - 19,00 - 18,20
Air volume	Cool / Heat	m³/min	40 / 40	40 / 45	40 / 45	61 / 60	118 / 108	125 / 122	129 / 116
Sound pressure	Cool / Heat (Hi)	dB(A)	43 / 44	45 / 48	46 / 49	48 / 50	52 / 52	53 / 53	54 / 54
Sound power	Cool / Heat (Hi)	dB	62 / 64	64 / 68	65 / 69	65 / 67	69 / 69	70 / 70	71 / 71
Dimension	H x W x D	mm	695 x 875 x 320	695 x 875 x 320	695 x 875 x 320	996 x 940 x 340	1416 x 940 x 340	1416 x 940 x 340	1416 x 940 x 340
Net weight		kg	43	43	44	68	99	99	99
Piping connections	Liquid pipe	Inch (mm)	1/4 (6,35)	1/4 (6,35)	3/8 (9,52)	3/8 (9,52)	3/8 (9,52)	3/8 (9,52)	3/8 (9,52)
	Gas pipe	Inch (mm)	1/2 (12,70)	1/2 (12,70)	5/8 (15,88)	5/8 (15,88)	5/8 (15,88)	5/8 (15,88)	5/8 (15,88)
Pipe length range		m	3 ~ 40	3 ~ 40	3 ~ 40	5 ~ 50	5 ~ 85	5 ~ 85	5 ~ 85
Elevation difference (in/out) [6]		m	30	30	30	30	30	30	30
Pipe length for additional gas		m	30	30	30	30	30	30	30
Additional gas amount		g/m	20	20	35	45	45	45	45
Refrigerant (R32) / CO_2 Eq.		kg / T	1,15 / 0,776	1,15 / 0,776	1,45 / 0,979	1,95 / 1,316	3,05 / 2,059	3,05 / 2,059	3,05 / 2,059
Operating range	Cool Min ~ Max	°C	-15 ~ +46	-15 ~ +46	-15 ~ +46	-15 ~ +46	-20 [7] ~ +46	-20 [7] ~ +46	-20 [7] ~ +46
	Heat Min ~ Max	°C	-20 ~ +24	-20 ~ +24	-20 ~ +24	-20 ~ +24	-20 ~ +24	-20 ~ +24	-20 ~ +24

Accessories	
CZ-RTC6	NEW Wired remote controller (non-wireless)
CZ-RTC6BL	NEW Wired remote controller with Bluetooth®
CZ-RTC5B	Wired remote controller with Econavi function and datanavi
CZ-RWS3 + CZ-RWRC3	Infrared remote controller
CZ-CAPWFC1	Commercial WLAN Adaptor
PAW-WTRAY	Tray for condenser water compatible with outdoor elevation platform

Accessories	
PAW-GRDBSE20	Outdoor base ground support for noise and vibration absorption
PAW-GRDSTD40	Outdoor elevation platform 400 x 900 x 400 mm
CZ-CENSC1	Econavi energy savings sensor
CZ-56DAF2	Air Outlet Plenum S . .PF1E5B 36, 45 & 50
CZ-90DAF2	Air Outlet Plenum S . .PF1E5B 60 & 71
CZ-160DAF2	Air Outlet Plenum S . .PF1E5B 100, 125 & 140
CZ-DUMPA90MF2	Air Inlet Plenum S . .PF1E5B 60 & 71
CZ-DUMPA160MF2	Air Inlet Plenum S . .PF1E5B 100, 125 & 140

Technical focus

- High ESP (external static pressure) up to 150 Pa
- Automatic learning function for the required static pressure on site during commissioning (a standard wired remote controller is required)
- DC FAN for better efficiency and control
- Built in drain pump
- Datanavi simple support tool App with remote controller (CZ-RTC5B)
- Twin split options
- Easy connection and control of external fan or ERV using the connector PAW-FDC on the indoor unit PCB. The external device can be controlled by the remote control of the Panasonic indoor unit

The static pressure outside the unit can be increased up to 150 Pa

Type		36	45	50	60	71	100	125	140
Standard	Pa	70	70	70	70	70	100	100	100
Maximum available setting	Pa	150	150	150	150	150	150	150	150

More powerful drain pump

Using a high-lift drain pump, drain piping can be elevated up to 785 mm from the base of the unit.

Plenums

Air outlet plenum (without regulation adaptor)

	Diameters	Model
36, 45 & 50	2xØ 200	CZ-56DAF2
60 & 71	3xØ 200	CZ-90DAF2
100, 125 & 140	4xØ 200	CZ-160DAF2

Air inlet plenum

	Diameters	Model
60 & 71	3xØ 200	CZ-DUMPA90MF2
100, 125 & 140	4xØ 200	CZ-DUMPA160MF2

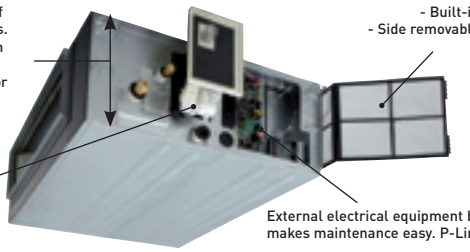

			Three Phase			
			7,1 kW	10,0 kW	12,5 kW	14,0 kW
KIT			**KIT-71PF1ZH8**	**KIT-100PF1ZH8**	**KIT-125PF1ZH8**	**KIT-140PF1ZH8**
Remote controller			**CZ-RTC5B**	**CZ-RTC5B**	**CZ-RTC5B**	**CZ-RTC5B**
Cooling capacity	Nominal (Min - Max)	kW	7,1 (2,2 - 9,0)	10,0 (3,1 - 12,5)	12,5 (3,2 - 14,0)	14,0 (3,3 - 16,0)
EER [1]		W/W	3,84	4,13	3,52	3,26
SEER [2]			**6,4 A++**	**6,1 A++**	**5,9**	**5,7**
Pdesign		kW	7,1	10,0	12,5	14,0
Input power cooling		kW	1,85	2,42	3,55	4,30
Annual energy consumption [3]		kWh/a	388	574	—	—
Heating capacity	Nominal (Min - Max)	kW	8,0 (2,0 - 9,0)	11,2 (3,1 - 14,0)	14,0 (3,2 - 16,0)	16,0 (3,3 - 18,0)
COP [1]		W/W	4,00	4,31	4,02	3,65
SCOP [2]			**4,6 A++**	**4,4 A+**	**4,3**	**4,2**
Pdesign at -10 °C		kW	5,2	8,0	9,5	10,6
Input power heating		kW	2,00	2,60	3,48	4,38
Annual energy consumption [3]		kWh/a	1582	2545	—	—
Indoor unit			**S-71PF1E5B**	**S-100PF1E5B**	**S-125PF1E5B**	**S-140PF1E5B**
External static pressure [4]	Nominal (Min - Max)	Pa	70 (10 - 150)	100 (10 - 150)	100 (10 - 150)	100 (10 - 150)
Air volume	Hi / Med / Lo	m³/min	21,0 / 19,0 / 15,0	32,0 / 26,0 / 21,0	34,0 / 29,0 / 23,0	36,0 / 32,0 / 25,0
Sound pressure [5]	Hi / Med / Lo	dB(A)	35 / 32 / 26	38 / 34 / 31	39 / 35 / 32	40 / 36 / 33
Dimension	H x W x D	mm	290 x 1000 x 700	290 x 1400 x 700	290 x 1400 x 700	290 x 1400 x 700
Net weight		kg	33	45	45	45
Outdoor unit			**U-71PZH2E8**	**U-100PZH2E8**	**U-125PZH2E8**	**U-140PZH2E8**
Power source		V	380 - 400 - 415	380 - 400 - 415	380 - 400 - 415	380 - 400 - 415
Current	Cool	A	2,80 - 2,70 - 2,60	3,60 - 3,40 - 3,30	5,40 - 5,10 - 4,95	6,60 - 6,25 - 6,05
	Heat	A	3,00 - 2,90 - 2,80	3,90 - 3,70 - 3,55	5,30 - 5,00 - 4,85	6,70 - 6,40 - 6,15
Air volume	Cool / Heat	m³/min	61 / 60	118 / 108	125 / 112	129 / 116
Sound pressure	Cool / Heat (Hi)	dB(A)	48 / 50	52 / 52	53 / 53	54 / 54
Sound power	Cool / Heat (Hi)	dB	65 / 67	69 / 69	70 / 70	71 / 71
Dimension	H x W x D	mm	996 x 940 x 340	1416 x 940 x 340	1416 x 940 x 340	1416 x 940 x 340
Net weight		kg	68	99	99	99
Piping connections	Liquid pipe	Inch (mm)	3/8 (9,52)	3/8 (9,52)	3/8 (9,52)	3/8 (9,52)
	Gas pipe	Inch (mm)	5/8 (15,88)	5/8 (15,88)	5/8 (15,88)	5/8 (15,88)
Pipe length range		m	5 ~ 50	5 ~ 85	5 ~ 85	5 ~ 85
Elevation difference (in/out) [6]		m	30	30	30	30
Pipe length for additional gas		m	30	30	30	30
Additional gas amount		g/m	45	45	45	45
Refrigerant (R32) / CO_2 Eq.		kg / T	1,95 / 1,316	3,05 / 2,059	3,05 / 2,059	3,05 / 2,059
Operating range	Cool Min ~ Max	°C	-15 ~ +46	-20 [7] ~ +46	-20 [7] ~ +46	-20 [7] ~ +46
	Heat Min ~ Max	°C	-20 ~ +24	-20 ~ +24	-20 ~ +24	-20 ~ +24

1) EER and COP calculation is based in accordance to EN14511. 2) Energy Label Scale from A+++ to D. For models below 12 kW, the SEER and SCOP is calculated based on values of EU/626/2011. For models above 12 kW, the SEER and SCOP is calculated based on values of EU/2281/2016. 3) The annual energy consumption is calculated in accordance to EU/626/2011. 4) Medium External static pressure setting from factory. 5) The sound pressure of the units shows the value measured of the position 1,5 m below the unit. The sound pressure is measured in accordance with Eurovent 6/C/006-97 specification. 6) When installing the outdoor unit at a higher position than the indoor unit. 7) For models 100 ~ 140PZH2E5(8), it is possible to operate the lowest -20 °C in the computer rooms with the piping length of 30 m or less.
* Recommended fuse for the indoor 3 A.

R32 | A++ 6,5 SEER | A++ 4,6 SCOP | INVERTER+ | -15°C COOLING MODE | -20°C HEATING MODE | DC FAN | FILTER INCLUDED | R22/R410A RENEWAL | OPTIONAL WLAN | BMS CONNECTIVITY | 5 YEARS COMPRESSOR WARRANTY

SEER and SCOP: For KIT-71PF1ZH5. INTERNET CONTROL: Optional.
Compatible with all Panasonic connectivity solutions. For detailed information go to the Control Systems section.

Rating Conditions: Cooling Indoor 27°C DB / 19°C WB. Cooling Outdoor 35°C DB / 24°C WB. Heating Indoor 20°C DB. Heating Outdoor 7°C DB / 6°C WB. (DB: Dry Bulb; WB: Wet Bulb).
Specifications subject to change without notice. For detailed information about ErP / Energy Labelling, please visit our websites www.aircon.panasonic.eu or www.ptc.panasonic.eu.

Standard High Static Pressure Hide Away Inverter+ • R32 refrigerant

The ducted systems are the ideal solution for flexible, concealed air conditioning and the optional 200 mm spigots ensure simple, hassle-free connection to spiral ductwork.

CZ-RTC5B

CZ-RTC6
CZ-RTC6BL
Optional Controller.
Wired remote controller.

CZ-RWS3 +
CZ-RWRC3
Optional Controller.
Infrared remote controller.

CZ-CENSC1
Optional Econavi Sensor.

			Single Phase				
			6,0 kW	**7,1 kW**	**10,0 kW**	**12,5 kW**	**14,0 kW**
KIT			**KIT-60PF1Z5**	**KIT-71PF1Z5**	**KIT-100PF1Z5**	**KIT-125PF1Z5**	**KIT-140PF1Z5**
Remote controller			**CZ-RTC5B**	**CZ-RTC5B**	**CZ-RTC5B**	**CZ-RTC5B**	**CZ-RTC5B**
Cooling capacity	Nominal (Min - Max)	kW	6,0 (2,0 ~ 7,10)	7,1 (2,0 ~ 7,70)	10,0 (3,0 - 11,50)	12,5 (3,2 - 13,50)	14,0 (3,3 - 15,00)
EER [1]	Nominal (Min - Max)	W/W	3,51	3,23	3,66 (5,36 - 2,81)	3,52 (5,33 - 2,80)	3,18 (5,32 - 2,70)
SEER [2]			**6,1 A++**	**6,1 A++**	**5,6 A+**	**5,6**	**5,4**
Pdesign		kW	6,0	7,1	10,0	12,5	14,0
Input power cooling	Nominal (Min - Max)	kW	1,71	2,20	2,73 (0,56 - 4,09)	3,55 (0,60 - 4,82)	4,40 (0,62 - 5,56)
Annual energy consumption [3]		kWh/a	344	407	625	787	911
Heating capacity	Nominal (Min - Max)	kW	6,0 (1,8 ~ 7,00)	7,1 (1,8 ~ 8,10)	10,0 (3,0 - 14,00)	12,5 (3,3 - 15,00)	14,0 (3,4 - 16,00)
COP [1]	Nominal (Min - Max)	W/W	4,55	4,13	4,31 (5,36 - 3,51)	4,02 (5,50 - 3,45)	3,79 (5,48 - 3,13)
SCOP [2]			**4,2 A+**	**4,3 A+**	**3,8 A**	**3,6**	**3,5**
Pdesign at -10 °C		kW	6,0	6,0	10,0	12,5	13,6
Input power heating	Nominal (Min - Max)	kW	1,32	1,72	2,32 (0,56 - 3,99)	3,11 (0,60 - 4,35)	3,69 (0,62 - 5,12)
Annual energy consumption [3]		kWh/a	2000	1953	3684	4848	5379
Indoor unit			**S-60PF1E5B**	**S-71PF1E5B**	**S-100PF1E5B**	**S-125PF1E5B**	**S-140PF1E5B**
External static pressure [4]	Nominal (Min - Max)	Pa	70 (10 - 150)	70 (10 - 150)	100 (10 - 150)	100 (10 - 150)	100 (10 - 150)
Air volume	Hi / Med / Lo	m³/min	21,0 / 19,0 / 15,0	21,0 / 19,0 / 15,0	32,0 / 26,0 / 21,0	34,0 / 29,0 / 23,0	36,0 / 32,0 / 25,0
Moisture removal volume		L/h	3,4	4,2	6,0	7,9	9,0
Sound pressure [5]	Hi / Med / Lo	dB(A)	35 / 32 / 26	35 / 32 / 26	38 / 34 / 31	39 / 35 / 32	40 / 36 / 33
Sound power	Hi / Med / Lo	dB	57 / 54 / 48	57 / 54 / 48	60 / 56 / 53	61 / 57 / 54	62 / 58 / 55
Dimension	H x W x D	mm	290 x 1000 x 700	290 x 1000 x 700	290 x 1400 x 700	290 x 1400 x 700	290 x 1400 x 700
Net weight		kg	33	33	45	45	45
Outdoor unit			**U-60PZ2E5**	**U-71PZ2E5**	**U-100PZ2E5**	**U-125PZ2E5**	**U-140PZ2E5**
Power source		V	220 - 230 - 240	220 - 230 - 240	220 - 230 - 240	220 - 230 - 240	220 - 230 - 240
Current	Cool	A	8,05 - 7,70 - 7,35	10,40 - 9,95 - 9,50	12,10 - 11,60 - 11,10	16,10 - 15,50 - 14,80	20,20 - 19,30 - 18,60
	Heat	A	6,05 - 5,80 - 5,55	8,10 - 7,75 - 7,40	10,10 - 9,70 - 9,30	14,00 - 13,40 - 12,90	16,80 - 16,00 - 15,30
Air volume	Cool / Heat	m³/min	40 / 45	50 / 45	76 / 70	86 / 78	89 / 83
Sound pressure	Cool / Heat (Hi)	dB(A)	46 / 48	49 / 49	52 / 52	55 / 55	56 / 56
Sound power	Cool / Heat (Hi)	dB	65 / 68	69 / 69	70 / 70	73 / 73	74 / 74
Dimension	H x W x D	mm	695 x 875 x 320	695 x 875 x 320	996 x 980 x 370	996 x 980 x 370	996 x 980 x 370
Net weight		kg	44	44	90	94	94
Piping connections	Liquid pipe	Inch (mm)	3/8 (9,52)	3/8 (9,52)	3/8 (9,52)	3/8 (9,52)	3/8 (9,52)
	Gas pipe	Inch (mm)	5/8 (15,88)	5/8 (15,88)	5/8 (15,88)	5/8 (15,88)	5/8 (15,88)
Pipe length range		m	3 ~ 40	3 ~ 40	5 ~ 50	5 ~ 50	5 ~ 50
Elevation difference (in/out) [6]		m	30	30	30	30	30
Pipe length for additional gas		m	30	30	30	30	30
Additional gas amount		g/m	35	35	45	45	45
Refrigerant (R32) / CO_2 Eq.		kg / T	1,45 / 0,979	1,45 / 0,979	2,60 / 1,755	2,98 / 2,0115	2,98 / 2,0115
Operating range	Cool Min ~ Max	°C	-10 ~ +43	-10 ~ +43	-10 ~ +43	-10 ~ +43	-10 ~ +43
	Heat Min ~ Max	°C	-15 ~ +24	-15 ~ +24	-15 ~ +24	-15 ~ +24	-15 ~ +24

Accessories	
CZ-RTC6	NEW Wired remote controller (non-wireless)
CZ-RTC6BL	NEW Wired remote controller with Bluetooth®
CZ-RTC5B	Wired remote controller with Econavi function and datanavi
CZ-RWS3 + CZ-RWRC3	Infrared remote controller
CZ-CAPWFC1	Commercial WLAN Adaptor
PAW-WTRAY	Tray for condenser water compatible with outdoor elevation platform

Accessories	
PAW-GRDBSE20	Outdoor base ground support for noise and vibration absorption
PAW-GRDSTD40	Outdoor elevation platform 400 x 900 x 400 mm
CZ-CENSC1	Econavi energy savings sensor
CZ-90DAF2	Air Outlet Plenum S . .PF1E5B 60 & 71
CZ-160DAF2	Air Outlet Plenum S . .PF1E5B 100, 125 & 140
CZ-DUMPA90MF2	Air Inlet Plenum S . .PF1E5B 60 & 71
CZ-DUMPA160MF2	Air Inlet Plenum S . .PF1E5B 100, 125 & 140

Technical focus

- High ESP (external static pressure) up to 150 Pa
- Automatic learning function for the required static pressure on site during commissioning (a standard wired remote controller is required)
- DC FAN for better efficiency and control
- Built in drain pump
- Datanavi simple support tool App with remote controller (CZ-RTC5B)
- Twin split options
- Easy connection and control of external fan or ERV using the connector PAW-FDC on the indoor unit PCB. The external device can be controlled by the remote control of the Panasonic indoor unit

The static pressure outside the unit can be increased up to 150 Pa

Type		60	71	100	125	140
Standard	Pa	70	70	100	100	100
Maximum available setting	Pa	150	150	150	150	150

More powerful drain pump

Using a high-lift drain pump, drain piping can be elevated up to 785 mm from the base of the unit.

Plenums

Air outlet plenum (without regulation adaptor)

	Diameters	Model
60 & 71	3xØ 200	CZ-90DAF2
100, 125 & 140	4xØ 200	CZ-160DAF2

Air inlet plenum

	Diameters	Model
60 & 71	3xØ 200	CZ-DUMPA90MF2
100, 125 & 140	4xØ 200	CZ-DUMPA160MF2

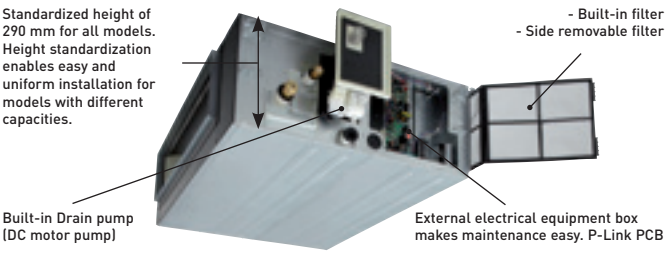

			Three Phase		
			10,0 kW	12,5 kW	14,0 kW
KIT			**KIT-100PF1Z8**	**KIT-125PF1Z8**	**KIT-140PF1Z8**
Remote controller			**CZ-RTC5B**	**CZ-RTC5B**	**CZ-RTC5B**
Cooling capacity	Nominal (Min - Max)	kW	10,0 (3,0 - 11,50)	12,5 (3,2 - 13,50)	14,0 (3,3 - 15,00)
EER [1]	Nominal (Min - Max)	W/W	3,66 (5,36 - 2,81)	3,52 (5,33 - 2,80)	3,18 (5,32 - 2,70)
SEER [2]			**5,6 A+**	**5,6**	**5,4**
Pdesign		kW	10,0	12,5	14,0
Input power cooling	Nominal (Min - Max)	kW	2,73 (0,56 - 4,09)	3,55 (0,60 - 4,82)	4,40 (0,62 - 5,56)
Annual energy consumption [3]		kWh/a	625	790	912
Heating capacity	Nominal (Min - Max)	kW	10,0 (3,0 - 14,00)	12,5 (3,3 - 15,00)	14,0 (3,4 - 16,00)
COP [1]	Nominal (Min - Max)	W/W	4,31 (5,36 - 3,51)	4,02 (5,50 - 3,45)	3,79 (5,48 - 3,13)
SCOP [2]			**3,8 A**	**3,6**	**3,5**
Pdesign at -10 °C		kW	10,0	12,5	13,6
Input power heating	Nominal (Min - Max)	kW	2,32 (0,56 - 3,99)	3,11 (0,60 - 4,35)	3,69 (0,62 - 5,12)
Annual energy consumption [3]		kWh/a	3684	4848	5379
Indoor unit			**S-100PF1E5B**	**S-125PF1E5B**	**S-140PF1E5B**
External static pressure [4]	Nominal (Min - Max)	Pa	100 (10 - 150)	100 (10 - 150)	100 (10 - 150)
Air volume	Hi / Med / Lo	m³/min	32,0 / 26,0 / 21,0	34,0 / 29,0 / 23,0	36,0 / 32,0 / 25,0
Moisture removal volume		L/h	6,0	7,9	9,0
Sound pressure [5]	Hi / Med / Lo	dB(A)	38 / 34 / 31	39 / 35 / 32	40 / 36 / 33
Sound power	Hi / Med / Lo	dB	60 / 56 / 53	61 / 57 / 54	62 / 58 / 55
Dimension	H x W x D	mm	290 x 1400 x 700	290 x 1400 x 700	290 x 1400 x 700
Net weight		kg	45	45	45
Outdoor unit			**U-100PZ2E8**	**U-125PZ2E8**	**U-140PZ2E8**
Power source		V	380 - 400 - 415	380 - 400 - 415	380 - 400 - 415
Current	Cool	A	4,15 - 3,95 - 3,80	5,40 - 5,10 - 4,95	6,75 - 6,40 - 6,15
	Heat	A	3,45 - 3,30 - 3,20	4,70 - 4,45 - 4,30	5,60 - 5,30 - 5,15
Air volume	Cool / Heat	m³/min	76 / 70	86 / 78	89 / 83
Sound pressure	Cool / Heat (Hi)	dB(A)	52 / 52	55 / 55	56 / 56
Sound power	Cool / Heat (Hi)	dB	70 / 70	73 / 73	74 / 74
Dimension	H x W x D	mm	996 x 980 x 370	996 x 980 x 370	996 x 980 x 370
Net weight		kg	90	94	94
Piping connections	Liquid pipe	Inch (mm)	3/8 (9,52)	3/8 (9,52)	3/8 (9,52)
	Gas pipe	Inch (mm)	5/8 (15,88)	5/8 (15,88)	5/8 (15,88)
Pipe length range		m	5 ~ 50	5 ~ 50	5 ~ 50
Elevation difference (in/out) [6]		m	30	30	30
Pipe length for additional gas		m	30	30	30
Additional gas amount		g/m	45	45	45
Refrigerant (R32) / CO_2 Eq.		kg / T	2,60 / 1,755	2,98 / 2,0115	2,98 / 2,0115
Operating range	Cool Min ~ Max	°C	-10 ~ +43	-10 ~ +43	-10 ~ +43
	Heat Min ~ Max	°C	-15 ~ +24	-15 ~ +24	-15 ~ +24

1) EER and COP calculation is based in accordance to EN14511. 2) Energy Label Scale from A+++ to D. For models below 12 kW, the SEER and SCOP is calculated based on values of EU/626/2011. For models above 12 kW, the SEER and SCOP is calculated based on values of EU/2281/2016. 3) The annual energy consumption is calculated in accordance to EU/626/2011. 4) Medium External static pressure setting from factory. 5) The sound pressure of the units shows the value measured of the position 1,5 m below the unit. The sound pressure is measured in accordance with Eurovent 6/C/006-97 specification. 6) When installing the outdoor unit at a higher position than the indoor unit. * Recommended fuse for the indoor 3 A.

R32 | A++ 6,1 SEER | A+ 4,3 SCOP | INVERTER+ | -10°C COOLING MODE | -15°C HEATING MODE | DC FAN | FILTER INCLUDED | R22 R410A R32 R22/R410A RENEWAL | OPTIONAL WLAN | BMS CONNECTIVITY | 5 YEARS COMPRESSOR WARRANTY

SEER and SCOP: For KIT-71PF1Z5. INTERNET CONTROL: Optional.
Compatible with all Panasonic connectivity solutions. For detailed information go to the Control Systems section.

Rating Conditions: Cooling Indoor 27°C DB / 19°C WB. Cooling Outdoor 35°C DB / 24°C WB. Heating Indoor 20°C DB. Heating Outdoor 7°C DB / 6°C WB. (DB: Dry Bulb; WB: Wet Bulb).
Specifications subject to change without notice. For detailed information about ErP / Energy Labelling, please visit our websites www.aircon.panasonic.eu or www.ptc.panasonic.eu.

PACi Elite Low Static Pressure Hide Away Inverter+ • R32 refrigerant

The depth of only 250 mm provides greater installation flexibility and the unit can be used in more applications. Ideal for sites with narrow ceiling voids.

Ultra-slim profile: 250 mm height for all models.

CZ-RTC5B

CZ-RTC6
CZ-RTC6BL
Optional Controller.
Wired remote controller.

CZ-RWS3 +
CZ-RWRC3
Optional Controller.
Infrared remote controller.

CZ-CENSC1
Optional Econavi Sensor.

			Single Phase						
			3,6 kW	5,0 kW	6,0 kW	7,1 kW	10,0 kW	12,5 kW	14,0 kW
KIT			**KIT-36PN1ZH5**	**KIT-50PN1ZH5**	**KIT-60PN1ZH5**	**KIT-71PN1ZH5**	**KIT-100PN1ZH5**	**KIT-125PN1ZH5**	**KIT-140PN1ZH5**
Remote controller			**CZ-RTC5B**	**CZ-RTC5B**	**CZ-RTC5B**	**CZ-RTC5B**	**CZ-RTC5B**	**CZ-RTC5B**	**CZ-RTC5B**
Cooling capacity	Nominal (Min - Max)	kW	3,6 (1,5 - 4,0)	5,0 (1,5 - 5,6)	6,0 (2,0 - 7,1)	7,1 (2,0 - 9,0)	10,0 (3,1 - 12,5)	12,5 (3,2 - 14,0)	14,0 (3,3 - 16,0)
EER [1]		W/W	3,85	3,40	3,41	3,40	3,95	3,35	3,15
SEER [2]			**5,1 A**	**5,1 A**	**6,0 A+**	**6,0 A+**	**6,0 A+**	**6,0**	**5,8**
Pdesign		kW	3,6	5,0	6,0	7,1	10,0	12,5	14,0
Input power cooling		kW	0,93	1,47	1,76	2,09	2,53	3,73	4,45
Annual energy consumption [3]		kWh/a	246	342	350	414	582	—	—
Heating capacity	Nominal (Min - Max)	kW	4,0 (1,5 - 5,0)	5,6 (1,5 - 6,5)	7,0 (1,8 - 7,0)	8,0 (2,0 - 9,0)	11,2 (3,1 - 14,0)	14,0 (3,3 - 16,0)	16,0 (3,3 - 18,0)
COP [1]		W/W	4,40	3,50	3,80	3,90	4,00	3,70	3,50
SCOP [2]			**4,0 A+**	**4,0 A+**	**4,0 A+**	**4,0 A+**	**4,0 A+**	**3,9**	**3,8**
Pdesign at -10 °C		kW	3,6	3,8	5,6	5,2	8,0	9,5	10,6
Input power heating		kW	0,91	1,60	1,84	2,05	2,80	3,78	4,45
Annual energy consumption [3]		kWh/a	1258	1573	2095	1914	2799	—	—
Indoor unit			**S-36PN1E5B**	**S-50PN1E5B**	**S-60PN1E5B**	**S-71PN1E5B**	**S-100PN1E5B**	**S-125PN1E5B**	**S-140PN1E5B**
External static pressure [4]	Nominal (Min - Max)	Pa	25 (10 - 80)	25 (10 - 80)	25 (10 - 80)	25 (10 - 80)	40 (10 - 80)	50 (10 - 80)	50 (10 - 80)
Air volume	Hi / Med / Lo	m³/min	14,0 / 12,0 / 10,0	16,0 / 13,0 / 10,0	22,0 / 20,0 / 16,0	22,0 / 20,0 / 16,0	36,0 / 33,0 / 26,0	38,0 / 35,0 / 28,0	40,0 / 37,0 / 30,0
Sound pressure [5]	Hi / Med / Lo	dB(A)	35 / 33 / 30	36 / 34 / 30	38 / 36 / 31	38 / 36 / 31	39 / 37 / 32	40 / 38 / 33	41 / 39 / 34
Dimension	H x W x D	mm	250 x 780 x 650	250 x 780 x 650	250 x 1000 x 650	250 x 1000 x 650	250 x 1200 x 650	250 x 1200 x 650	250 x 1200 x 650
Net weight		kg	29	29	32	32	41	41	41
Outdoor unit			**U-36PZH2E5**	**U-50PZH2E5**	**U-60PZH2E5**	**U-71PZH2E5**	**U-100PZH2E5**	**U-125PZH2E5**	**U-140PZH2E5**
Power source		V	220 - 230 - 240	220 - 230 - 240	220 - 230 - 240	220 - 230 - 240	220 - 230 - 240	220 - 230 - 240	220 - 230 - 240
Current	Cool	A	4,20 - 4,00 - 3,85	6,50 - 6,20 - 5,95	8,20 - 7,85 - 7,50	9,45 - 9,00 - 8,60	11,20-10,70-10,20	16,90-16,10-15,40	20,00-19,30-18,40
	Heat	A	4,10 - 3,90 - 3,75	7,15 - 6,85 - 6,55	8,60 - 8,25 - 7,85	9,20 - 8,85 - 8,45	2,40-11,90-11,40	17,00-16,20-15,60	20,20-19,30-18,50
Air volume	Cool / Heat	m³/min	40 / 40	40 / 45	40 / 45	61 / 60	118 / 108	125 / 122	129 / 116
Sound pressure	Cool / Heat (Hi)	dB(A)	43 / 44	45 / 48	46 / 49	48 / 50	52 / 52	53 / 53	54 / 54
Sound power	Cool / Heat (Hi)	dB	62 / 64	64 / 68	65 / 69	65 / 67	69 / 69	70 / 70	71 / 71
Dimension	H x W x D	mm	695 x 875 x 320	695 x 875 x 320	695 x 875 x 320	996 x 940 x 340	1416 x 940 x 340	1416 x 940 x 340	1416 x 940 x 340
Net weight		kg	43	43	44	68	99	99	99
Piping connections	Liquid pipe	Inch (mm)	1/4 (6,35)	1/4 (6,35)	3/8 (9,52)	3/8 (9,52)	3/8 (9,52)	3/8 (9,52)	3/8 (9,52)
	Gas pipe	Inch (mm)	1/2 (12,70)	1/2 (12,70)	5/8 (15,88)	5/8 (15,88)	5/8 (15,88)	5/8 (15,88)	5/8 (15,88)
Pipe length range		m	3 ~ 40	3 ~ 40	3 ~ 40	5 ~ 50	5 ~ 85	5 ~ 85	5 ~ 85
Elevation difference (in/out) [6]		m	30	30	30	30	30	30	30
Pipe length for additional gas		m	30	30	30	30	30	30	30
Additional gas amount		g/m	20	20	35	45	45	45	45
Refrigerant (R32) / CO_2 Eq.		kg / T	1,15 / 0,776	1,15 / 0,776	1,45 / 0,979	1,95 / 1,316	3,05 / 2,059	3,05 / 2,059	3,05 / 2,059
Operating range	Cool Min ~ Max	°C	-15 ~ +46	-15 ~ +46	-15 ~ +46	-15 ~ +46	-20 [7] ~ +46	-20 [7] ~ +46	-20 [7] ~ +46
	Heat Min ~ Max	°C	-20 ~ +24	-20 ~ +24	-20 ~ +24	-20 ~ +24	-20 ~ +24	-20 ~ +24	-20 ~ +24

Accessories	
CZ-RTC6	NEW Wired remote controller (non-wireless)
CZ-RTC6BL	NEW Wired remote controller with Bluetooth®
CZ-RTC5B	Wired remote controller with Econavi function and datanavi
CZ-RWS3 + CZ-RWRC3	Infrared remote controller
CZ-CAPWFC1	Commercial WLAN Adaptor

Accessories	
PAW-WTRAY	Tray for condenser water compatible with outdoor elevation platform
PAW-GRDBSE20	Outdoor base ground support for noise and vibration absorption
PAW-GRDSTD40	Outdoor elevation platform 400 x 900 x 400 mm
CZ-CENSC1	Econavi energy savings sensor

Technical focus

- Automatic learning function for the required static pressure on site during commissioning (a standard wired remote controller is required. S-60/71/100/125/140PN1E5B models only)
- Compact indoor units without loosing static pressure (only 250 mm high)
- 50 Pa static pressure
- Easy maintenance and service via external electrical box
- 3 speed centrifugal fan through wired or Infrared remote controller
- DC FAN for better efficiency and control
- Easy connection and control of external fan or ERV using the connector PAW-FDC on the indoor unit PCB. The external device can be controlled by the remote control of the Panasonic indoor unit

System Example

An inspection port (450 mmx450 mm or more) is required at the control-box side of the indoor unit body.

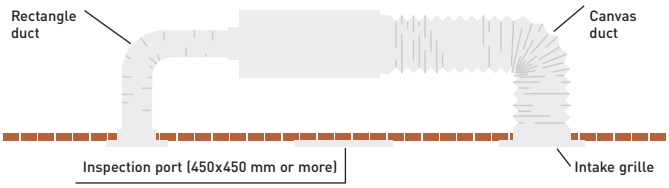

Cold Drafts Reduction at Heating

Accurate DX Coil temperature measurement by E1 and E2 sensor to reduce cold drafts at heating and increasing efficiency and comfort.

Before spec-in, please consult with an authorized Panasonic dealer.

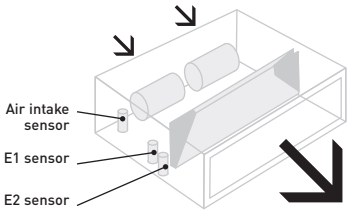

			Three Phase			
			7,1 kW	**10,0 kW**	**12,5 kW**	**14,0 kW**
KIT			**KIT-71PN1ZH8**	**KIT-100PN1ZH8**	**KIT-125PN1ZH8**	**KIT-140PN1ZH8**
Remote controller			**CZ-RTC5B**	**CZ-RTC5B**	**CZ-RTC5B**	**CZ-RTC5B**
Cooling capacity	Nominal (Min - Max)	kW	7,1 (2,2 - 9,0)	10,0 (3,1 - 12,5)	12,5 (3,2 - 14,0)	14,0 (3,3 - 16,0)
EER [1]		W/W	3,40	3,95	3,35	3,15
SEER [2]			**5,9 A+**	**5,9 A+**	**5,9**	**5,8**
Pdesign		kW	7,1	10,0	12,5	14,0
Input power cooling		kW	2,09	2,53	3,73	4,45
Annual energy consumption [3]		kWh/a	418	588	—	—
Heating capacity	Nominal (Min - Max)	kW	8,0 (2,0 - 9,0)	11,2 (3,1 - 14,0)	14,0 (3,3 - 16,0)	16,0 (3,3 - 18,0)
COP [1]		W/W	3,90	4,00	3,70	3,60
SCOP [2]			**4,0 A+**	**4,0 A+**	**3,9**	**3,8**
Pdesign at -10 °C		kW	5,2	8,0	9,5	10,6
Input power heating		kW	2,05	2,80	3,78	4,45
Annual energy consumption [3]		kWh/a	1914	2799	—	—
Indoor unit			**S-71PN1E5B**	**S-100PN1E5B**	**S-125PN1E5B**	**S-140PN1E5B**
External static pressure [4]	Nominal (Min - Max)	Pa	25 (10 - 80)	40 (10 - 80)	50 (10 - 80)	50 (10 - 80)
Air volume	Hi / Med / Lo	m³/min	22,0 / 20,0 / 16,0	36,0 / 33,0 / 26,0	38,0 / 35,0 / 28,0	46,0 / 37,0 / 30,0
Sound pressure [5]	Hi / Med / Lo	dB(A)	38 / 36 / 31	39 / 37 / 32	40 / 38 / 33	41 / 39 / 34
Dimension	H x W x D	mm	250 x 1000 x 650	250 x 1200 x 650	250 x 1200 x 650	250 x 1200 x 650
Net weight		kg	32	41	41	41
Outdoor unit			**U-71PZH2E8**	**U-100PZH2E8**	**U-125PZH2E8**	**U-140PZH2E8**
Power source		V	380 - 400 - 415	380 - 400 - 415	380 - 400 - 415	380 - 400 - 415
Current	Cool	A	3,20 - 3,05 - 2,95	3,75 - 3,55 - 3,45	5,65 - 5,40 - 5,20	11,70 - 11,20 - 10,70
	Heat	A	3,20 - 2,95 - 2,85	4,20 - 4,00 - 3,85	5,75 - 5,45 - 5,25	6,80 - 6,45 - 6,20
Air volume	Cool / Heat	m³/min	61 / 60	118 / 108	125 / 112	129 / 116
Sound pressure	Cool / Heat (Hi)	dB(A)	48 / 50	52 / 52	53 / 53	54 / 54
Sound power	Cool / Heat (Hi)	dB	65 / 67	69 / 69	70 / 70	71 / 71
Dimension	H x W x D	mm	996 x 940 x 340	1416 x 940 x 340	1416 x 940 x 340	1416 x 940 x 340
Net weight		kg	68	99	99	99
Piping connections	Liquid pipe	Inch (mm)	3/8 (9,52)	3/8 (9,52)	3/8 (9,52)	3/8 (9,52)
	Gas pipe	Inch (mm)	5/8 (15,88)	5/8 (15,88)	5/8 (15,88)	5/8 (15,88)
Pipe length range		m	5 ~ 50	5 ~ 85	5 ~ 85	5 ~ 85
Elevation difference (in/out) [6]		m	30	30	30	30
Pipe length for additional gas		m	30	30	30	30
Additional gas amount		g/m	45	45	45	45
Refrigerant (R32) / CO_2 Eq.		kg / T	1,95 / 1,316	3,05 / 2,059	3,05 / 2,059	3,05 / 2,059
Operating range	Cool Min ~ Max	°C	-15 ~ +46	-20 [7] ~ +46	-20 [7] ~ +46	-20 [7] ~ +46
	Heat Min ~ Max	°C	-20 ~ +24	-20 ~ +24	-20 ~ +24	-20 ~ +24

1) EER and COP calculation is based in accordance to EN14511. 2) Energy Label Scale from A+++ to D. For models below 12 kW, the SEER and SCOP is calculated based on values of EU/626/2011. For models above 12 kW, the SEER and SCOP is calculated based on values of EU/2281/2016. 3) The annual energy consumption is calculated in accordance to EU/626/2011. 4) Medium external static pressure setting from factory. 5) The sound pressure of the units shows the value measured of the position 1,5 m below the unit. The sound pressure is measured in accordance with Eurovent 6/C/006-97 specification. 6) When installing the outdoor unit at a higher position than the indoor unit. 7) For models 100 ~ 140PZH2E5(8), it is possible to operate the lowest -20 °C in the computer rooms with the piping length of 30 m or less.
* Recommended fuse for the indoor 3 A.

R32 | A+ 6,0 SEER | A+ 4,0 SCOP | INVERTER+ | -15°C COOLING MODE | -20°C HEATING MODE | DC FAN | FILTER INCLUDED | R22/R410A RENEWAL | OPTIONAL WLAN | BMS CONNECTIVITY | 5 YEARS COMPRESSOR WARRANTY

SEER and SCOP: KIT-60PN1ZH5, KIT-71PN1ZH5 and KIT-100PN1ZH5. INTERNET CONTROL: Optional.
Compatible with all Panasonic connectivity solutions. For detailed information go to the Control Systems section.

Rating Conditions: Cooling Indoor 27°C DB / 19°C WB. Cooling Outdoor 35°C DB / 24°C WB. Heating Indoor 20°C DB. Heating Outdoor 7°C DB / 6°C WB. (DB: Dry Bulb; WB: Wet Bulb).
Specifications subject to change without notice. For detailed information about ErP / Energy Labelling, please visit our websites www.aircon.panasonic.eu or www.ptc.panasonic.eu.

PACi Standard Low Static Pressure Hide Away Inverter+ • R32 refrigerant

The depth of only 250 mm provides greater installation flexibility and the unit can be used in more applications. Ideal for sites with narrow ceiling voids.

Ultra-slim profile: 250 mm height for all models.

CZ-RTC5B

CZ-RTC6
CZ-RTC6BL
Optional Controller.
Wired remote controller.

CZ-RWS3 +
CZ-RWRC3
Optional Controller.
Infrared remote controller.

CZ-CENSC1
Optional Econavi Sensor.

			Single Phase				
			6,0 kW	**7,1 kW**	**10,0 kW**	**12,5 kW**	**14,0 kW**
KIT			**KIT-60PN1Z5**	**KIT-71PN1Z5**	**KIT-100PN1Z5**	**KIT-125PN1Z5**	**KIT-140PN1Z5**
Remote controller			**CZ-RTC5B**	**CZ-RTC5B**	**CZ-RTC5B**	**CZ-RTC5B**	**CZ-RTC5B**
Cooling capacity	Nominal (Min - Max)	kW	6,0 (2,0 ~ 7,1)	7,1 (2,0 ~ 7,7)	10,0 (3,0 - 11,5)	12,5 (3,2 - 13,5)	14,0 (3,3 - 15,0)
EER [1]		W/W	3,31	3,11	3,30	3,20	3,00
SEER [2]			**5,8 A+**	**5,8 A+**	**5,4 A**	**5,1**	**5,0**
Pdesign		kW	6,0	7,1	10,0	12,5	14,0
Input power cooling		kW	1,81	2,28	3,03	3,90	4,65
Annual energy consumption [3]		kWh/a	361	428	641	—	—
Heating capacity	Nominal (Min - Max)	kW	6,0 (1,8 ~ 7,0)	7,1 (1,8 ~ 8,1)	10,0 (3,0 - 14,0)	12,5 (3,3 - 15,0)	14,0 (3,4 - 16,0)
COP [1]		W/W	3,90	3,72	3,91	3,60	3,55
SCOP [2]			**4,0 A+**	**4,0 A+**	**3,9 A**	**3,6**	**3,5**
Pdesign at -10 °C		kW	5,6	5,6	7,6	12,5	14,0
Input power heating		kW	1,54	1,90	2,56	3,46	3,94
Annual energy consumption [3]		kWh/a	2095	2100	3589	—	—
Indoor unit			**S-60PN1E5B**	**S-71PN1E5B**	**S-100PN1E5B**	**S-125PN1E5B**	**S-140PN1E5B**
External static pressure [4]	Nominal (Min - Max)	Pa	25 (10 - 80)	25 (10 - 80)	40 (10 - 80)	50 (10 - 80)	50 (10 - 80)
Air volume	Hi / Med / Lo	m³/min	22,0 / 20,0 / 16,0	22,0 / 20,0 / 16,0	36,0 / 33,0 / 26,0	38,0 / 35,0 / 28,0	40,0 / 37,0 / 30,0
Sound pressure [5]	Hi / Med / Lo	dB(A)	38 / 36 / 31	38 / 36 / 31	39 / 37 / 32	40 / 38 / 33	41 / 39 / 34
Dimension	H x W x D	mm	250 x 1000 x 650	250 x 1000 x 650	250 x 1200 x 650	250 x 1200 x 650	250 x 1200 x 650
Net weight		kg	32	32	41	41	41
Outdoor unit			**U-60PZ2E5**	**U-71PZ2E5**	**U-100PZ2E5**	**U-125PZ2E5**	**U-140PZ2E5**
Power source		V	220 - 230 - 240	220 - 230 - 240	220 - 230 - 240	220 - 230 - 240	220 - 230 - 240
Current	Cool	A	8,30 - 8,00 - 7,60	10,60 - 10,10 - 9,60	14,00 - 13,30 - 12,80	17,90 - 17,10 - 16,50	21,50 - 20,50 - 19,60
	Heat	A	7,00 - 6,70 - 6,40	8,80 - 8,40 - 8,00	11,60 - 11,10 - 10,70	15,80 - 15,10 - 14,50	18,00 - 17,30 - 16,50
Air volume	Cool / Heat	m³/min	40 / 45	50 / 45	76 / 70	86 / 78	89 / 83
Sound pressure	Cool / Heat (Hi)	dB(A)	46 / 48	49 / 49	52 / 52	55 / 55	56 / 56
Sound power	Cool / Heat (Hi)	dB	65 / 68	69 / 69	70 / 70	73 / 73	74 / 74
Dimension	H x W x D	mm	695 x 875 x 320	695 x 875 x 320	996 x 980 x 370	996 x 980 x 370	996 x 980 x 370
Net weight		kg	44	44	90	94	94
Piping connections	Liquid pipe	Inch (mm)	3/8 (9,52)	3/8 (9,52)	3/8 (9,52)	3/8 (9,52)	3/8 (9,52)
	Gas pipe	Inch (mm)	5/8 (15,88)	5/8 (15,88)	5/8 (15,88)	5/8 (15,88)	5/8 (15,88)
Pipe length range		m	3 ~ 40	3 ~ 40	5 ~ 50	5 ~ 50	5 ~ 50
Elevation difference (in/out) [6]		m	30	30	30	30	30
Pipe length for additional gas		m	30	30	30	30	30
Additional gas amount		g/m	35	35	45	45	45
Refrigerant (R32) / CO_2 Eq.		kg / T	1,45 / 0,979	1,45 / 0,979	2,60 / 1,755	2,98 / 2,0115	2,98 / 2,0115
Operating range	Cool Min ~ Max	°C	-10 ~ +43	-10 ~ +43	-10 ~ +43	-10 ~ +43	-10 ~ +43
	Heat Min ~ Max	°C	-15 ~ +24	-15 ~ +24	-15 ~ +24	-15 ~ +24	-15 ~ +24

Accessories	
CZ-RTC6	NEW Wired remote controller (non-wireless)
CZ-RTC6BL	NEW Wired remote controller with Bluetooth®
CZ-RTC5B	Wired remote controller with Econavi function and datanavi
CZ-RWS3 + CZ-RWRC3	Infrared remote controller
CZ-CAPWFC1	Commercial WLAN Adaptor

Accessories	
PAW-WTRAY	Tray for condenser water compatible with outdoor elevation platform
PAW-GRDBSE20	Outdoor base ground support for noise and vibration absorption
PAW-GRDSTD40	Outdoor elevation platform 400 x 900 x 400 mm
CZ-CENSC1	Econavi energy savings sensor

Technical focus

- Automatic learning function for the required static pressure on site during commissioning (a standard wired remote controller is required. S-60/71/100/125/140PN1E5B models only)
- Compact indoor units without loosing static pressure (only 250 mm high)
- 50 Pa static pressure
- Easy maintenance and service via external electrical box
- 3 speed centrifugal fan through wired or Infrared remote controller
- DC FAN for better efficiency and control
- Easy connection and control of external fan or ERV using the connector PAW-FDC on the indoor unit PCB. The external device can be controlled by the remote control of the Panasonic indoor unit

System Example

An inspection port (450 mmx450 mm or more) is required at the control-box side of the indoor unit body.

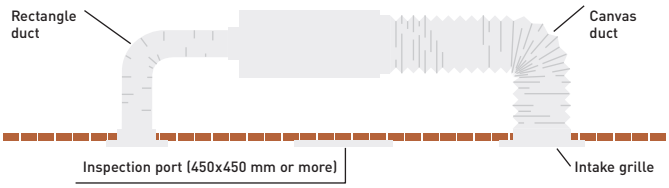

Cold Drafts Reduction at Heating

Accurate DX Coil temperature measurement by E1 and E2 sensor to reduce cold drafts at heating and increasing efficiency and comfort.

Before spec-in, please consult with an authorized Panasonic dealer.

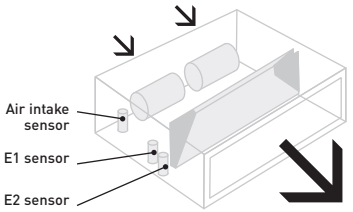

			Three Phase		
			10,0 kW	12,5 kW	14,0 kW
KIT			**KIT-100PN1Z8**	**KIT-125PN1Z8**	**KIT-140PN1Z8**
Remote controller			**CZ-RTC5B**	**CZ-RTC5B**	**CZ-RTC5B**
Cooling capacity	Nominal (Min - Max)	kW	10,0 (3,0 - 11,5)	12,5 (3,2 - 13,5)	14,0 (3,3 - 15,0)
EER [1]		W/W	3,30	3,21	3,01
SEER [2]			**5,4 A**	**5,1**	**5,0**
Pdesign		kW	10,0	12,5	14,0
Input power cooling		kW	3,03	3,90	4,65
Annual energy consumption [3]		kWh/a	648	—	—
Heating capacity	Nominal (Min - Max)	kW	10,0 (3,0 - 14,0)	12,5 (3,3 - 15,0)	14,0 (3,4 - 16,0)
COP [1]		W/W	3,91	3,61	3,55
SCOP [2]			**3,9 A**	**3,6**	**3,5**
Pdesign at -10 °C		kW	7,6	12,5	14,0
Input power heating		kW	2,56	3,46	3,94
Annual energy consumption [3]		kWh/a	3589	—	—
Indoor unit			**S-100PN1E5B**	**S-125PN1E5B**	**S-140PN1E5B**
External static pressure [4]	Nominal (Min - Max)	Pa	40 (10 - 80)	50 (10 - 80)	50 (10 - 80)
Air volume	Hi / Med / Lo	m³/min	36,0 / 33,0 / 26,0	38,0 / 35,0 / 28,0	40,0 / 37,0 / 30,0
Sound pressure [5]	Hi / Med / Lo	dB(A)	39 / 37 / 32	40 / 38 / 33	41 / 39 / 34
Dimension	H x W x D	mm	250 x 1200 x 650	250 x 1200 x 650	250 x 1200 x 650
Net weight		kg	41	41	41
Outdoor unit			**U-100PZ2E8**	**U-125PZ2E8**	**U-140PZ2E8**
Power source		V	380 - 400 - 415	380 - 400 - 415	380 - 400 - 415
Current	Cool	A	4,70 - 4,50 - 4,30	6,00 - 5,70 - 5,50	7,20 - 6,80 - 6,60
	Heat	A	3,90 - 3,70 - 3,60	5,30 - 5,00 - 4,90	6,00 - 5,70 - 5,50
Air volume	Cool / Heat	m³/min	76 / 70	86 / 78	89 / 83
Sound pressure	Cool / Heat (Hi)	dB(A)	52 / 52	55 / 55	56 / 56
Sound power	Cool / Heat (Hi)	dB	70 / 70	73 / 73	74 / 74
Dimension	H x W x D	mm	996 x 980 x 370	996 x 980 x 370	996 x 980 x 370
Net weight		kg	90	94	94
Piping connections	Liquid pipe	Inch (mm)	3/8 (9,52)	3/8 (9,52)	3/8 (9,52)
	Gas pipe	Inch (mm)	5/8 (15,88)	5/8 (15,88)	5/8 (15,88)
Pipe length range		m	5 ~ 50	5 ~ 50	5 ~ 50
Elevation difference (in/out) [6]		m	30	30	30
Pipe length for additional gas		m	30	30	30
Additional gas amount		g/m	45	45	45
Refrigerant (R32) / CO_2 Eq.		kg / T	2,60 / 1,755	2,98 / 2,0115	2,98 / 2,0115
Operating range	Cool Min ~ Max	°C	-10 ~ +43	-10 ~ +43	-10 ~ +43
	Heat Min ~ Max	°C	-15 ~ +24	-15 ~ +24	-15 ~ +24

1) EER and COP calculation is based in accordance to EN14511. 2) Energy Label Scale from A+++ to D. For models below 12 kW, the SEER and SCOP is calculated based on values of EU/626/2011. For models above 12 kW, the SEER and SCOP is calculated based on values of EU/2281/2016. 3) The annual energy consumption is calculated in accordance to EU/626/2011. 4) Medium external static pressure setting from factory. 5) The sound pressure of the units shows the value measured of the position 1,5 m below the unit. The sound pressure is measured in accordance with Eurovent 6/C/006-97 specification. 6) When installing the outdoor unit at a higher position than the indoor unit. * Recommended fuse for the indoor 3 A.

R32 | A+ 5,8 SEER | A+ 4,0 SCOP | INVERTER+ | -10°C COOLING MODE | -15°C HEATING MODE | DC FAN | FILTER INCLUDED | R22/R410A RENEWAL | OPTIONAL WLAN | BMS CONNECTIVITY | 5 YEARS COMPRESSOR WARRANTY

SEER and SCOP: For KIT-60PN1Z5 and KIT-71PN1Z5. INTERNET CONTROL: Optional.
Compatible with all Panasonic connectivity solutions. For detailed information go to the Control Systems section.

Rating Conditions: Cooling Indoor 27°C DB / 19°C WB. Cooling Outdoor 35°C DB / 24°C WB. Heating Indoor 20°C DB. Heating Outdoor 7°C DB / 6°C WB. (DB: Dry Bulb; WB: Wet Bulb).
Specifications subject to change without notice. For detailed information about ErP / Energy Labelling, please visit our websites www.aircon.panasonic.eu or www.ptc.panasonic.eu.

Panasonic Big PACi Series R32

Panasonic Big PACi, not only environmental friendly but also a groundbreaking product.
Big PACi with R32 has been introduced with full renewal of its indoor unit, offering hydronic application by PACi Water Heat Exchanger.

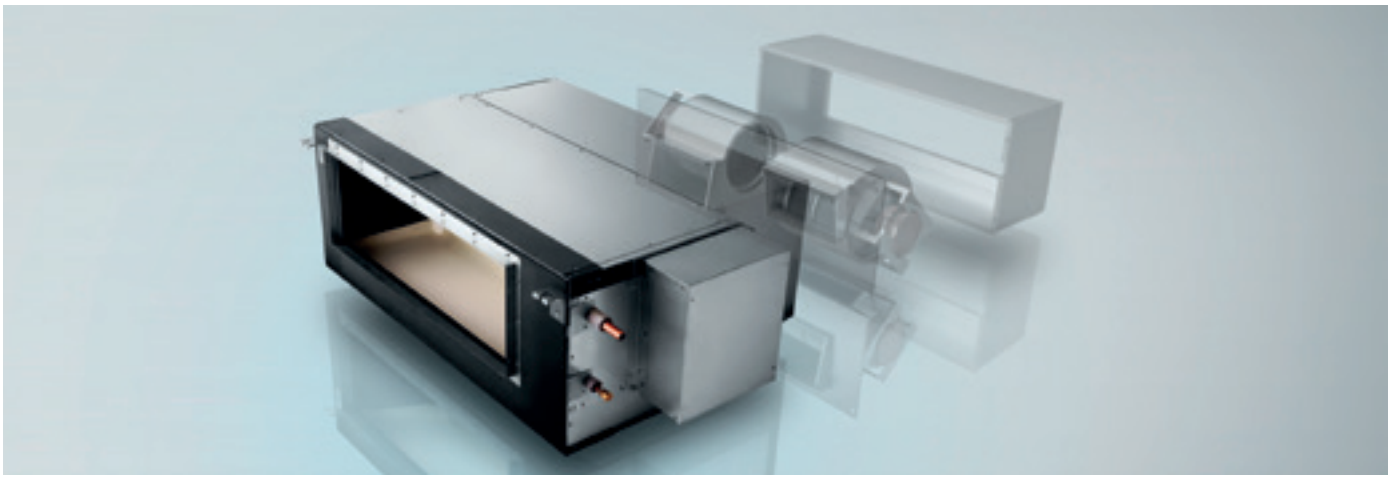

1 Compact & light indoor body

Compact and light indoor body, keeping the high efficiency, has a split-able design for easy installation within a limited narrow space. Plus ease of maintenance due to the simplified disassembly design.

2 Easy pipe work with split-able Hide Away indoor design

Heat exchanger and fan elements (fan + casing) can be separated during installation. The Hide Away indoor unit is easily reassembled and will fit through a narrow space.

3 High external static pressure, max 200 Pa* setting

A high static pressure enables the use of long ducts for installation in a wide range of spaces.

* S-250PE3E5B.

4 Panasonic Comfort Cloud control

Ready to control PACi systems with Panasonic Comfort Cloud App in your smartphones.*

* Panasonic WLAN adaptor CZ-CAPWFC1 is required.

Compact and light indoor body, keeping high efficiency

15 % lighter weight vs conventional model drastically improves installation work.

	Conventional model	New
20,0 kW	100kg	86kg
25,0 kW	104kg	88kg

DEPTH WAS REDUCED BY 230 mm

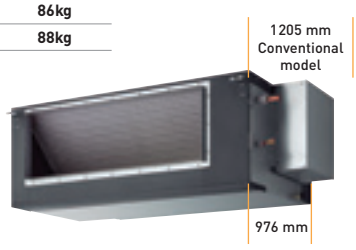

Maximum 200Pa* static pressure setting

A high static pressure enables the use of long ducts for installation in a wide range of spaces.

3-step static pressure set up.
Selectable of static pressure modes can change 200Pa / 130Pa / 75Pa for extra installation flexibility.

* In case of S-250PE3E5B.

Easy Installation with Light Components

Indoor unit can easily be split into 3 components, the heaviest of which weighs only 48kg.

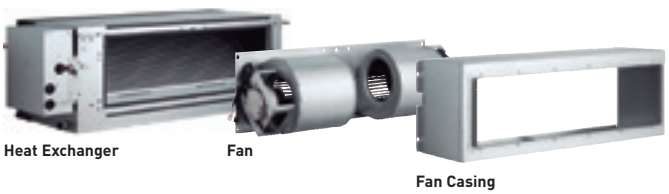

Dimensions of Each Component (lightweight design for easy disassembly).

The weight is for S-200PE3E5B model.

Big PACi High Static Pressure Hide Away 20,0-25,0 kW Inverter+
• R32 refrigerant

Big PACi is useful and cost saving solution for small and mid size of projects, can be offered also with VRF system. Compact and light indoor body, keeping the high efficiency, has a split-able design for easy installation within a limited narrow space.

CZ-RTC5B

Technical focus

Highly efficient with compact indoor body, -16kg lighter than conventional model (10 HP) — Split-able Hide Away indoor design for easy & flexible piping work — Better partial load control with Panasonic compressor — Bluefin anti-rust coating — PACi Water Heat Exchanger compatible — Panasonic cloud control compatible — 0-10V demand control

CZ-RTC6
CZ-RTC6BL
Optional Controller.
Wired remote controller.

CZ-RWS3 +
CZ-RWRC3
Optional Controller.
Infrared remote controller.

CZ-CENSC1
Optional Econavi Sensor.

			Three Phase	
			20,0 kW	**25,0 kW**
KIT			**KIT-200PE3ZH8**	**KIT-250PE3ZH8**
Remote controller			**CZ-RTC5B**	**CZ-RTC5B**
Cooling capacity	Nominal (Min - Max)	kW	19,5 (5,7 - 21,0)	23,2 (6,1 - 27,0)
EER [1]		W/W	3,22	3,11
SEER [2]			**5,3**	**4,9**
Pdesign		kW	19,5	23,2
Input power cooling		kW	6,06	7,46
Heating capacity	Nominal (Min - Max)	kW	22,4 (5,0 - 25,0)	28,0 (5,5 - 29,0)
COP [1]		W/W	3,61	3,41
SCOP [2]			**3,6**	**3,6**
Pdesign at -10 °C		kW	17,0	20,0
Input power heating		kW	6,21	8,21
Indoor unit			**S-200PE3E5B**	**S-250PE3E5B**
Power source		V / ph / Hz	220 - 230 - 240 / 1 / 50	220 - 230 - 240 / 1 / 50
External static pressure at shipment (adjustable)		Pa	75 [3] - 120 - 180	75 [3] - 130 - 200
Air volume	Hi / Med / Lo	m³/min	72 / 63 / 53	84 / 72 / 59
Sound pressure [4]	Hi / Med / Lo	dB(A)	46 / 44 / 41	47 / 45 / 42
Dimension / Net weight	H x W x D	mm / kg	486 x 1456 x 916 / 86	486 x 1456 x 916 / 88
Outdoor unit			**U-200PZH2E8**	**U-250PZH2E8**
Power source		V / ph / Hz	380 - 400 - 415 / 3 / 50	380 - 400 - 415 / 3 / 50
Recommended fuse		A	30	30
Air volume	Cool / Heat	m³/min	164 / 164	160 / 160
Sound pressure	Cool / Heat (Hi)	dB(A)	59 / 61	59 / 63
Sound power	Cool / Heat (Hi)	dB	77 / 79	78 / 82
Dimension [5] / Net weight	H x W x D	mm / kg	1500 x 980 x 370 / 117	1500 x 980 x 370 / 128
Piping connections	Liquid pipe	Inch (mm)	3/8 (9,52)	1/2 (12,70)
	Gas pipe	Inch (mm)	1 (25,40)	1 (25,40)
Pipe length range		m	5 ~ 90	5 ~ 60
Elevation difference (in/out) [6]		m	30	30
Pipe length for additional gas		m	30	30
Additional gas amount		g/m	60	80
Refrigerant (R32) / CO_2 Eq.		kg / T	4,20 / 2,835	5,20 / 3,51
Operating range	Cool Min ~ Max	°C	-15 ~ +46	-15 ~ +46
	Heat Min ~ Max	°C	-20 ~ +24	-20 ~ +24

Accessories	
CZ-RTC6	NEW Wired remote controller (non-wireless)
CZ-RTC6BL	NEW Wired remote controller with Bluetooth®
CZ-RTC5B	Wired remote controller with Econavi function and datanavi
CZ-RWS3 + CZ-RWRC3	Infrared remote controller

Accessories	
CZ-CAPWFC1	Commercial WLAN Adaptor
PAW-GRDBSE20	Outdoor base ground support for noise and vibration absorption
PAW-GRDSTD40	Outdoor elevation platform 400 x 900 x 400 mm
CZ-CENSC1	Econavi energy savings sensor

1) EER and COP calculation is based in accordance to EN14511. 2) For models below 12 kW, the SEER and SCOP is calculated based on values of EU/626/2011. For models above 12 kW, the SEER and SCOP is calculated based on values of EU/2281/2016. 3) Factory setting. 4) The sound pressure of the units shows the value measured of the position 1,5 m below the unit. The sound pressure is measured in accordance with Eurovent 6/C/006-97 specification. 5) Add 100 mm for indoor unit or 70 mm for outdoor unit for piping port. 6) When installing the outdoor unit at a higher position than the indoor unit. * No filter included.

INTERNET CONTROL: Optional.
Compatible with all Panasonic connectivity solutions. For detailed information go to the Control Systems section.

Rating Conditions: Cooling Indoor 27°C DB / 19°C WB. Cooling Outdoor 35°C DB / 24°C WB. Heating Indoor 20°C DB. Heating Outdoor 7°C DB / 6°C WB. (DB: Dry Bulb; WB: Wet Bulb).
Specifications subject to change without notice. For detailed information about ErP / Energy Labelling, please visit our websites www.aircon.panasonic.eu or www.ptc.panasonic.eu.

PACi Single, Twin, Triple and Double-Twin System

With this system, a single outdoor unit can split capacity for up to 4 indoor areas simultaneously. This makes the system particularly apt for common areas. It reduces noise concentration and enables the same temperature to be reached around the room. A mix of indoor units can be installed (Wall-mounted, Cassette, Hide Away, Ceiling) in one system.

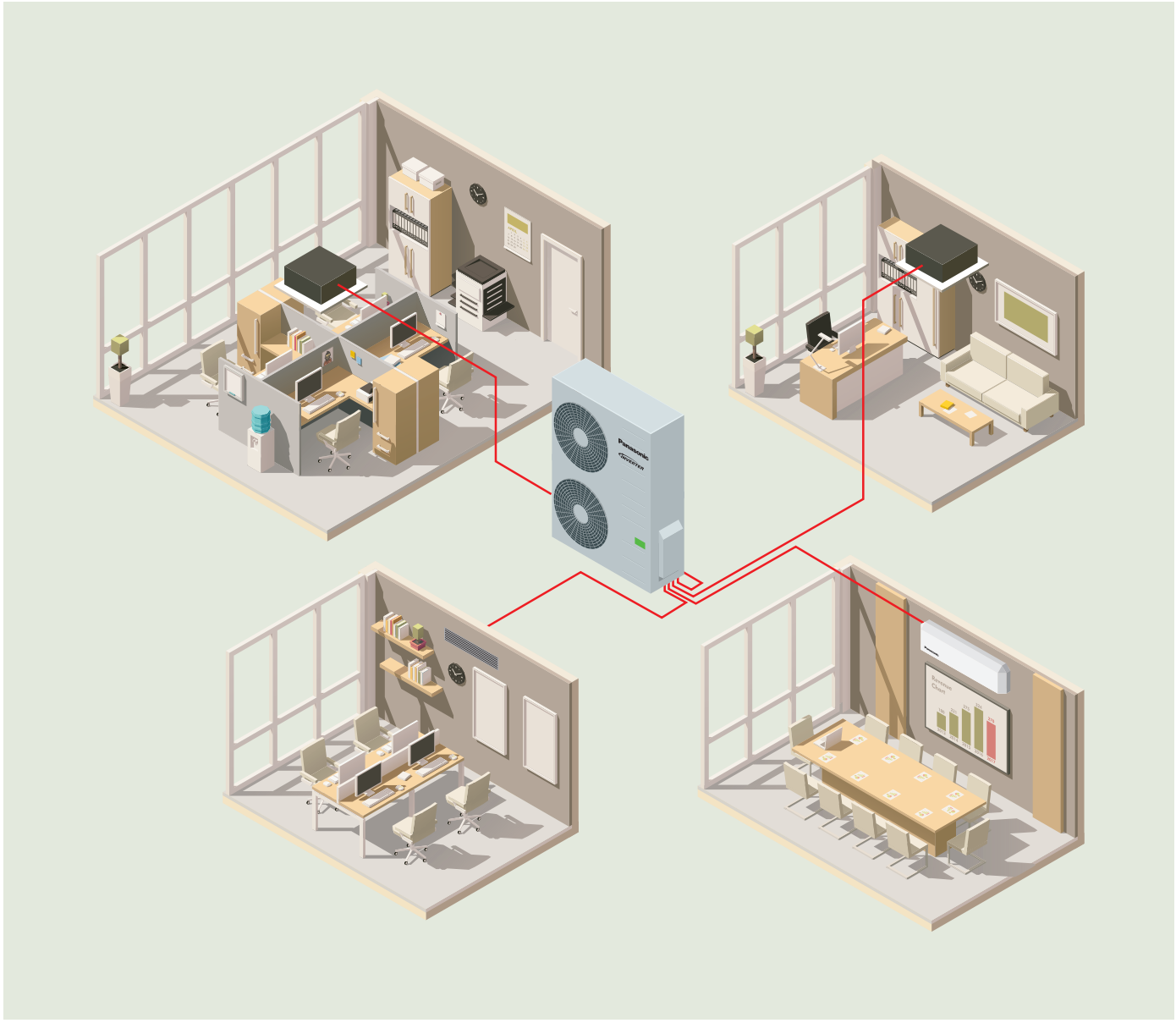

1 **PACi Standard from 7,1 to 14,0 kW**

Up to 2 indoor units connectable on the same outdoor. Panasonic's PACi units can be installed as single and twin systems. The indoor units can be combined following the selection table. The operation will always be simultaneous. All the indoor units will work with the same settings.

2 **PACi Elite from 7,1 to 14,0 kW**

Up to 4 indoor units can be connected to the same outdoor unit. Panasonic's PACi units 7,1, 10,0, 12,0 and 14,0 can be installed as twin, triple and double-twin systems. The indoor units can be combined as per the selection table. The operation will always be simultaneous. All the indoor units will work with the same settings.

3 **Big PACi Elite from 20,0 to 25,0 kW**

Up to 4 indoor units can be connected to the same outdoor unit. Panasonic's PACi units 20,0 and 25,0 can be installed as twin, triple and double-twin systems. The indoor units can be combined as per the selection table. The operation will always be simultaneous. All the indoor units will work with the same settings.

U-71PZH2E5
U-71PZH2E8

U-100PZH2E5
U-100PZH2E8
U-125PZH2E5
U-125PZH2E8
U-140PZH2E5
U-140PZH2E8

U-200PZH2E8
U-250PZH2E8

PACi Elite Outdoor units • R32 refrigerant

			7,1 kW	10,0 kW	12,5 kW	14,0 kW	20,0 kW	25,0 kW
Outdoor unit Single Phase			**U-71PZH2E5**	**U-100PZH2E5**	**U-125PZH2E5**	**U-140PZH2E5**	—	—
Outdoor unit Three Phase			**U-71PZH2E8**	**U-100PZH2E8**	**U-125PZH2E8**	**U-140PZH2E8**	**U-200PZH2E8**	**U-250PZH2E8**
Cooling capacity	Nominal (Min - Max)	kW	7,1 (2,2 - 9,0)	10,0 (3,1 - 12,5)	12,5 (3,2 - 14,0)	14,0 (3,3 - 16,0)	20,0 (5,7 - 22,4)	25,0 (6,1 - 28,0)
Heating capacity	Nominal (Min - Max)	kW	8,0 (2,0 - 9,0)	11,2 (3,1 - 14,0)	14,0 (3,2 - 16,0)	16,0 (3,3 - 18,0)	22,4 (5,0 - 25,0)	28,0 (5,5 - 31,5)
Power source	Single Phase	V	220 - 230 - 240	220 - 230 - 240	220 - 230 - 240	220 - 230 - 240	—	—
	Three Phase	V	380 - 400 - 415	380 - 400 - 415	380 - 400 - 415	380 - 400 - 415	380 - 400 - 415	380 - 400 - 415
Connection indoor / outdoor		mm²	2 x 1,5 or 2,5	2 x 1,5 or 2,5	2 x 1,5 or 2,5	2 x 1,5 or 2,5	—	—
Air volume	Cool / Heat	m³/min	61 / 60	118 / 108	125 / 122	129 / 116	164 / 164	160 / 160
Sound pressure	Cool / Heat (Hi)	dB(A)	48 / 50	52 / 52	53 / 53	54 / 54	59 / 61	59 / 63
Sound power	Cool / Heat (Hi)	dB	65 / 67	69 / 69	70 / 70	71 / 71	77 / 79	78 / 82
Dimension	H x W x D	mm	996 x 940 x 340	1416 x 940 x 340	1416 x 940 x 340	1416 x 940 x 340	1500 x 980 x 370	1500 x 980 x 370
Net weight		kg	68	99	99	99	117	128
Piping connections	Liquid pipe	Inch (mm)	3/8 (9,52)	3/8 (9,52)	3/8 (9,52)	3/8 (9,52)	3/8 (9,52)	1/2 (12,70)
	Gas pipe	Inch (mm)	5/8 (15,88)	5/8 (15,88)	5/8 (15,88)	5/8 (15,88)	1 (25,40)	1 (25,40)
Pipe length range	Min ~ Max	m	5 ~ 50	5 ~ 85	5 ~ 85	5 ~ 85	5 ~ 80	5 ~ 60
Elevation difference (in/out)	Max	m	30	30	30	30	30	30
Pipe length for additional gas		m	30	30	30	30	30	30
Additional gas amount		g/m	45	45	45	45	60	80
Refrigerant (R32) / CO_2 Eq.		kg / T	1,95 / 1,316	3,05 / 2,059	3,05 / 2,059	3,05 / 2,059	4,20 / 2,835	5,20 / 3,51
Operating range	Cool Min ~ Max	°C	-15 ~ +46	-20 [1] ~ +46	-20 [1] ~ +46	-20 [1] ~ +46	-15 ~ +46	-15 ~ +46
	Heat Min ~ Max	°C	-20 ~ +24	-20 ~ +24	-20 ~ +24	-20 ~ +24	-20 ~ +24	-20 ~ +24

1) For models 100 ~ 140PZH2E5(8), it is possible to operate the lowest -20 °C in the computer rooms with the piping length of 30 m or less.

U-71PZ2E5

U-100PZ2E5
U-100PZ2E8
U-125PZ2E5
U-125PZ2E8
U-140PZ2E5
U-140PZ2E8

PACi Standard Outdoor units • R32 refrigerant

			7,1 kW	10,0 kW	12,5 kW	14,0 kW
Outdoor unit Single Phase			**U-71PZ2E5**	**U-100PZ2E5**	**U-125PZ2E5**	**U-140PZ2E5**
Outdoor unit Three Phase			**—**	**U-100PZ2E8**	**U-125PZ2E8**	**U-140PZ2E8**
Cooling capacity	Nominal (Min - Max)	kW	7,1	10,0 (3,0 - 11,5)	12,5 (3,2 - 13,5)	14,0 (3,3 - 15,0)
Heating capacity	Nominal (Min - Max)	kW	7,1	10,0 (3,0 - 14,0)	12,5 (3,3 - 15,0)	14,0 (3,4 - 16,0)
Power source	Single Phase	V	220 - 230 - 240	220 - 230 - 240	220 - 230 - 240	220 - 230 - 240
	Three Phase	V	—	380 - 400 - 415	380 - 400 - 415	380 - 400 - 415
Connection indoor / outdoor		mm²	2 x 1,5 or 2,5	2 x 1,5 or 2,5	2 x 1,5 or 2,5	2 x 1,5 or 2,5
Air volume	Cool / Heat	m³/min	50 / 45	76 / 70	86 / 78	89 / 83
Sound pressure	Cool / Heat (Hi)	dB(A)	49 / 49	52 / 52	55 / 55	56 / 56
Sound power	Cool / Heat (Hi)	dB	69 / 69	70 / 70	73 / 73	74 / 74
Dimension	H x W x D	mm	695 x 875 x 320	996 x 980 x 370	996 x 980 x 370	996 x 980 x 370
Net weight		kg	44	90	94	94
Piping connections	Liquid pipe	Inch (mm)	3/8 (9,52)	3/8 (9,52)	3/8 (9,52)	3/8 (9,52)
	Gas pipe	Inch (mm)	5/8 (15,88)	5/8 (15,88)	5/8 (15,88)	5/8 (15,88)
Pipe length range	Min ~ Max	m	3 ~ 40	5 ~ 50	5 ~ 50	5 ~ 50
Elevation difference (in/out)	Max	m	30	30	30	30
Pipe length for additional gas		m	30	30	30	30
Additional gas amount		g/m	35	45	45	45
Refrigerant (R32) / CO_2 Eq.		kg / T	1,45 / 0,979	2,60 / 1,755	2,98 / 2,0115	2,98 / 2,0115
Operating range	Cool Min ~ Max	°C	-10 ~ +43	-10 ~ +43	-10 ~ +43	-10 ~ +43
	Heat Min ~ Max	°C	-15 ~ +24	-15 ~ +24	-15 ~ +24	-15 ~ +24

Wall-mounted	Indoor	Cooling capacity	Heating capacity	Dimension	Sound pressure	Air volume
				H x W x D	Hi / Med / Lo	Hi / Med / Lo
		kW	kW	mm	dB(A)	m³/min
3,6 kW	S-36PK2E5B	3,6	4,2	302 x 1120 x 236	35 / 31 / 27	11,00 / 9,50 / 7,50
4,5 kW	S-45PK2E5B	4,5	5,2	302 x 1120 x 236	38 / 34 / 30	12,00 / 10,50 / 8,50
5,0 kW	S-50PK2E5B	5,0	5,6	302 x 1120 x 236	40 / 36 / 32	14,00 / 12,00 / 10,50
6,0 kW	S-60PK2E5B	6,0	7,0	302 x 1120 x 236	47 / 44 / 40	18,00 / 14,50 / 11,50
7,1 kW	S-71PK2E5B	7,1	8,0	302 x 1120 x 236	47 / 44 / 40	18,00 / 14,50 / 11,50
10,0 kW	S-100PK2E5B	10,0	11,2	302 x 1120 x 236	47 / 44 / 40	19,00 / 16,50 / 13,00

4 Way 60x60 Cassette	Indoor (Panels CZ-KPY3AW / CZ-KPY3BW)	Cooling capacity	Heating capacity	Dimension: Indoor / CZ-KPY3AW / CZ-KPY3BW	Sound pressure	Air volume
				H x W x D	Hi / Med / Lo	Hi / Lo
		kW	kW	mm	dB(A)	m³/min
3,6 kW	S-36PY2E5B	3,6	4,2	288 x 583 x 583 / 31 x 700 x 700 / 31 x 625 x 625	36 / 32 / 26	9,70 / 9,90
4,5 kW	S-45PY2E5B	4,5	5,2	288 x 583 x 583 / 31 x 700 x 700 / 31 x 625 x 625	38 / 34 / 28	10,00 / 10,30
5,0 kW	S-50PY2E5B	5,0	5,6	288 x 583 x 583 / 31 x 700 x 700 / 31 x 625 x 625	40 / 37 / 33	11,10 / 11,10

4 Way 90x90 Cassette	Indoor (Panels CZ-KPU3W / CZ-KPU3AW)	Cooling capacity	Heating capacity	Dimension Indoor	Dimension Panel	Sound pressure	Air volume
				H x W x D	H x W x D	Hi / Med / Lo	Hi / Med / Lo
		kW	kW	mm	mm	dB(A)	m³/min
3,6 kW	S-36PU2E5B	3,6	4,2	256 x 840 x 840	33,5 x 950 x 950	30 / 28 / 27	14,50 / 13,00 / 11,50
4,5 kW	S-45PU2E5B	4,5	5,2	256 x 840 x 840	33,5 x 950 x 950	31 / 28 / 27	15,50 / 13,00 / 11,50
5,0 kW	S-50PU2E5B	5,0	5,6	256 x 840 x 840	33,5 x 950 x 950	32 / 29 / 27	16,50 / 13,50 / 11,50
6,0 kW	S-60PU2E5B	6,0	7,0	256 x 840 x 840	33,5 x 950 x 950	38 / 31 / 28	21,00 / 16,00 / 13,00
7,1 kW	S-71PU2E5B	7,1	8,0	256 x 840 x 840	33,5 x 950 x 950	37 / 31 / 28	22,00 / 16,00 / 13,00
10,0 kW	S-100PU2E5B	10,0	11,2	319 x 840 x 840	33,5 x 950 x 950	45 / 38 / 32	36,00 / 26,00 / 18,00
12,5 kW	S-125PU2E5B	12,5	14,0	319 x 840 x 840	33,5 x 950 x 950	46 / 39 / 33	37,00 / 27,00 / 19,00
14,0 kW	S-140PU2E5B	14,0	14,0	319 x 840 x 840	33,5 x 950 x 950	47 / 40 / 34	38,00 / 29,00 / 20,00

Ceiling	Indoor	Cooling capacity	Heating capacity	Dimension	Sound pressure	Air volume
				H x W x D	Hi / Med / Lo	Hi / Med / Lo
		kW	kW	mm	dB(A)	m³/min
3,6 kW	S-36PT2E5B	3,6	4,2	235 x 960 x 690	35 / 32 / 30	14,00 / 12,00 / 10,50
4,5 kW	S-45PT2E5B	4,5	5,2	235 x 960 x 690	38 / 33 / 30	15,00 / 12,50 / 10,50
5,0 kW	S-50PT2E5B	5,0	5,6	235 x 960 x 690	38 / 33 / 30	15,00 / 12,50 / 10,50
6,0 kW	S-60PT2E5B	6,0	7,0	235 x 1275 x 690	39 / 36 / 33	20,00 / 17,00 / 14,50
7,1 kW	S-71PT2E5B	7,1	8,0	235 x 1275 x 690	39 / 36 / 33	21,00 / 18,00 / 15,50
10,0 kW	S-100PT2E5B	10,0	11,2	235 x 1590 x 690	42 / 38 / 35	30,00 / 25,00 / 23,00
12,5 kW	S-125PT2E5B	12,5	14,0	235 x 1590 x 690	45 / 40 / 37	34,00 / 28,00 / 24,00
14,0 kW	S-140PT2E5B	14,0	14,0	235 x 1590 x 690	47 / 41 / 37	35,00 / 29,00 / 25,00

High Static Pressure Hide Away	Indoor	Cooling capacity	Heating capacity	Dimension	External static pressure	Sound pressure	Air volume
				H x W x D	Hi / Med / Lo	Hi / Med / Lo	Hi / Med / Lo
		kW	kW	mm	Pa	dB(A)	m³/min
3,6 kW	S-36PF1E5B	3,6	4,2	290 x 800 x 700	150 / 70 / 10	33 / 29 / 25	14,00 / 13,00 / 10,00
4,5 kW	S-45PF1E5B	4,5	5,2	290 x 800 x 700	150 / 70 / 10	34 / 30 / 26	14,00 / 13,00 / 10,00
5,0 kW	S-50PF1E5B	5,0	5,6	290 x 800 x 700	150 / 70 / 10	34 / 30 / 26	16,00 / 15,00 / 12,00
6,0 kW	S-60PF1E5B	6,0	7,0	290 x 1000 x 700	150 / 70 / 10	35 / 32 / 26	21,00 / 19,00 / 15,00
7,1 kW	S-71PF1E5B	7,1	8,0	290 x 1000 x 700	150 / 70 / 10	35 / 32 / 26	21,00 / 19,00 / 15,00
10,0 kW	S-100PF1E5B	10,0	11,2	290 x 1400 x 700	150 / 100 / 10	38 / 34 / 31	32,00 / 26,00 / 21,00
12,5 kW	S-125PF1E5B	12,5	14,0	290 x 1400 x 700	150 / 100 / 10	39 / 35 / 32	34,00 / 29,00 / 23,00
14,0 kW	S-140PF1E5B	14,0	14,0	290 x 1400 x 700	150 / 100 / 10	40 / 36 / 33	36,00 / 32,00 / 25,00

Low Static Pressure Hide Away	Indoor	Cooling capacity	Heating capacity	Dimension	External static pressure	Sound pressure	Air volume
				H x W x D	Hi / Med / Lo	Hi / Med / Lo	Hi / Med / Lo
		kW	kW	mm	Pa	dB(A)	m³/min
3,6 kW	S-36PN1E5B	3,6	4,2	250 x 780 x 650	80 / 50 / 10	40 / 38 / 35	14,00 / 12,00 / 10,00
4,5 kW	S-45PN1E5B	4,5	5,2	250 x 780 x 650	80 / 50 / 10	41 / 39 / 35	16,00 / 13,00 / 11,00
5,0 kW	S-50PN1E5B	5,0	5,6	250 x 780 x 650	80 / 50 / 10	41 / 39 / 35	16,00 / 13,00 / 11,00
6,0 kW	S-60PN1E5B	6,0	7,0	250 x 1000 x 650	80 / 50 / 10	43 / 41 / 36	22,00 / 20,00 / 16,00
7,1 kW	S-71PN1E5B	7,1	8,0	250 x 1000 x 650	80 / 50 / 10	43 / 41 / 36	22,00 / 20,00 / 16,00
10,0 kW	S-100PN1E5B	10,0	11,2	250 x 1200 x 650	80 / 50 / 10	44 / 42 / 37	36,00 / 33,00 / 26,00
12,5 kW	S-125PN1E5B	12,5	14,0	250 x 1200 x 650	80 / 50 / 10	46 / 44 / 39	38,00 / 35,00 / 28,00
14,0 kW	S-140PN1E5B	14,0	14,0	250 x 1200 x 650	80 / 50 / 10	46 / 44 / 39	40,00 / 37,00 / 30,00

Rating Conditions: Cooling Indoor 27°C DB / 19°C WB. Cooling Outdoor 35°C DB / 24°C WB. Heating Indoor 20°C DB. Heating Outdoor 7°C DB / 6°C WB. (DB: Dry Bulb; WB: Wet Bulb).
Specifications subject to change without notice. For detailed information about ErP / Energy Labelling, please visit our websites www.aircon.panasonic.eu or www.ptc.panasonic.eu.

PACi Standard from 7,1 to 14,0 kW Single/Simultaneous operation system combinations • R32 and • R410A refrigerant

	Outdoor			
Indoor	**7,1 kW**	**10,0 kW**	**12,5 kW**	**14,0 kW**
3,6 kW	Twin [1] U-71 S-36 S-36			
5,0 kW		Twin U-100 S-50 S-50		
6,0 kW			Twin U-125 S-60 S-60	
7,1 kW	Single [2] U-71 S-71			Twin U-140 S-71 S-71
10,0 kW		Single [2] U-100 S-100		
12,5 kW			Single [2] U-125 S-125	
14,0 kW				Single [2] U-140 S-140

PACi Elite from 7,1 to 14,0 kW Single/Simultaneous operation system combinations • R32 and • R410A refrigerant

	Outdoor			
Indoor	**7,1 kW**	**10,0 kW**	**12,5 kW**	**14,0 kW**
3,6 kW	Twin U-71 S-36 S-36	Triple U-100 S-36 S-36 S-36	Double-Twin U-125 S-36 S-36 S-36 S-36	
4,5 kW			Triple U-125 S-45 S-45 S-45	
5,0 kW		Twin U-100 S-50 S-50		Triple U-140 S-50 S-50 S-50
6,0 kW			Twin U-125 S-60 S-60	
7,1 kW	Single [2] U-71 S-71			Twin U-140 S-71 S-71
10,0 kW		Single [2] U-100 S-100		
12,5 kW			Single [2] U-125 S-125	
14,0 kW				Single [2] U-140 S-140

PACi Elite from 20,0 to 25,0 kW Single/Simultaneous operation system combinations • R32 and • R410A refrigerant

	Outdoor	
Indoor	**20,0 kW**	**25,0 kW**
5,0 kW	Double-Twin U-200 S-50 S-50 S-50 S-50	
6,0 kW		Double-Twin U-250 S-60 S-60 S-60 S-60
7,1 kW	Triple U-200 S-71 S-71 S-71	
10,0 kW	Twin U-200 S-100 S-100	
12,5 kW		Twin U-250 S-125 S-125
20,0 kW	Single [2] U-200 S-200	
25,0 kW		Single [2] U-250 S-250

1) Available for only PZ2 (R32) model with limitations of main pipe and branch pipe. Please contact an authorized Panasonic dealer. 2) PACi 1x1 Kit solution.

Single

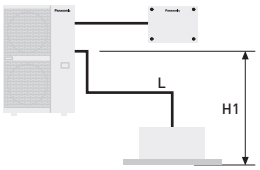

Twin

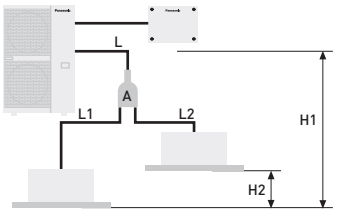

Triple

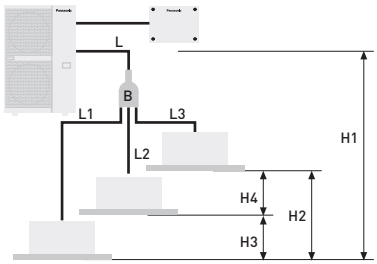

Double-twin

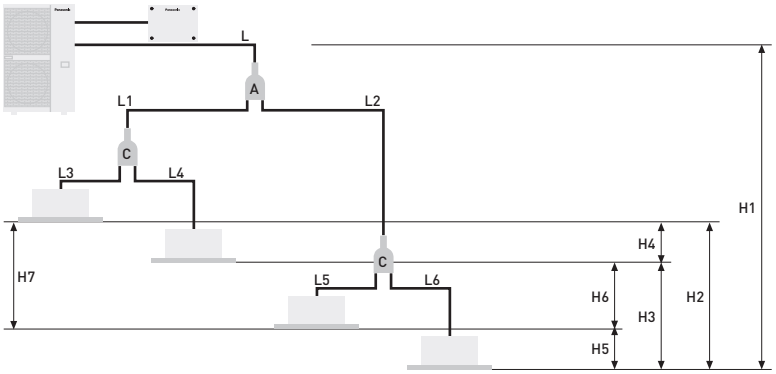

PACi Standard Twin System from 7,1 to 14,0 kW
Joint distribution (sold separately)
A= CZ-P224BK2BM

PACi Elite Twin, Triple and Double-Twin System from 7,1 to 14,0 kW
Joint distribution (sold separately)
A= CZ-P224BK2BM
B= CZ-P3 HPC2BM
C= CZ-P224BK2BM

PACi Elite Twin, Triple and Double-Twin System from 20,0 to 25,0 kW
Joint distribution (sold separately)
A = CZ-P680BK2BM
B = CZ-P3 HPC2BM
C = CZ-P224BK2BM

Twin System	PACi Standard Single and Twin System from 7,1 to 14,0 kW			PACi Elite Twin, Triple and Double-Twin System from 7,1 to 25 kW					
	Indoor unit combinations (see examples above)		Equivalent lengths and height differences (m) for outdoor unit sizes...	Indoor unit combinations (see examples above)				Equivalent lengths and height differences (m) for outdoor unit sizes from 7,1 to 14,0 kW	Equivalent lengths and height differences (m) for outdoor unit sizes from 20,0 to 25,0 kW
	Single	Twin		Single	Twin	Triple	Double-Twin		
Total pipe length	L	L + L1 + L2	≤ 50 m	L	L + L1 + L2	L + L1 + L2 + L3	L + L1 + L2 + L3 + L4 + L5 + L6	U-60/U-71: ≤ 50 m U-100/125/140: ≤ 75 m	U-200: ≤ 100 m U-250: ≤ 80 m
Maximum pipe length from outdoor unit to most distant indoor unit	–	–	–	–	L + L1 or L + L2	L + L1 or L + L2 or L + L3	L + L1 + L3 or L + L1 + L4 or L + L2 + L5 or L + L2 + L6	–	U-200: 90 m U-250: 60 m
Maximum branch pipe length	–	L1 L2	≤ 15	–	L1 or L2	L1 or L2 or L3	L1 + L3 or L1 + L4 or L2 + L5 or L2 + L6	≤ 15 m	≤ 20 m
Maximum branch pipe length differences	–	L1 > L2 L1 - L2	≤ 10	–	L1 > L2: L1 - L2	L1 > L2 > L3: L1 - L2 L2 - L3 L1 - L3	L2 + L6 (Max.) L1 + L3 (Min.): (L2 + L6) - (L1 + L3)	≤ 10 m	≤ 10 m
Maximum pipe length differences after first branch (Double-Twin)	–	–	–	–	–	–	L2 > L1: L2 - L1	≤ 10 m	≤ 10 m
Maximum pipe length differences after second branch (Double-Twin)	–	–	–	–	–	–	L4 > L3: L4 - L3 L6 > L5: L6 - L5	≤ 10 m	≤ 10 m
Height difference (outdoor unit located higher)	H1	H1	≤ 30	H1	H1	H1	H1	≤ 30 m	≤ 30 m
Height difference (outdoor unit located lower)	H1	H1	≤ 15	H1	H1	H1	H1	≤ 15 m	≤ 15 m
Height difference between indoor units	–	H2	≤ 0,5	–	H2	H2 or H3 or H4	H2 or H3 or H4 or H5 or H6	≤ 0,5 m	≤ 0,5 m

Twin System	PACi Standard Single and Twin System from 7,1 to 14,0 kW				PACi Elite Twin, Triple and Double-Twin System from 7,1 to 14,0 kW						PACi Elite Twin, Triple and Double-Twin System from 20,0 to 25,0 kW				
	Outdoor unit main pipe diameter (L)		Indoor unit connection tube (L1, L2)		Outdoor unit main pipe diameter (L)	Indoor unit connection pipe diameter (L1, L2, L3, L4) (mm)					Outdoor unit main pipe diameter (L) (mm)		Double-Twin distribution pipe (L1, L2) [1]	Indoor unit connection pipe diameter [2]	
Unit type capacity	100	125	50	60	71 - 140	36	45	50	60	71	200	250	100 - 125	50	60 - 125
Liquid pipe (mm)	Ø 9,52	Ø 12,70	Ø 6,35	Ø 9,52	Ø 9,52	Ø 6,35	Ø 6,35	Ø 6,35	Ø 9,52	Ø 9,52	Ø 9,52	Ø 12,70	Ø 9,52	Ø 6,35	Ø 9,52
Gas pipe (mm)	Ø 15,88	Ø 15,88	Ø 12,70	Ø 15,88	Ø 15,88	Ø 12,70	Ø 12,70	Ø 12,70	Ø 15,88	Ø 15,88	Ø 25,40	Ø 25,40	Ø 15,88	Ø 12,70	Ø 15,88
Additional gas amount (g/m)	50	50	20	50	50	20	20	20	50	50	60	80	45	20	45

1) Total capacity of indoor unit connected after the branch. 2) 4 Way Cassette type.

Make additional charges by adding up tube length in an order of main tube (L) → branch tube (L1 → L2 → L3 wide diameter) and then selecting the amount of refrigerant corresponding to the remaining (after charge-less tube length: 30 m) liquid tube diameter and tube length from the above table.

Rating Conditions: Cooling Indoor 27°C DB / 19°C WB. Cooling Outdoor 35°C DB / 24°C WB. Heating Indoor 20°C DB. Heating Outdoor 7°C DB / 6°C WB. (DB: Dry Bulb; WB: Wet Bulb).
Specifications subject to change without notice. For detailed information about ErP / Energy Labelling, please visit our websites www.aircon.panasonic.eu or www.ptc.panasonic.eu.

PRO-HT Tank Series for PACi

PRO-HT TANK

Panasonic commercial PRO-HT Tank solutions.
Efficient heating and cooling tank connecting to R32 PACi outdoor.

Heating and cooling tank 380L + PACi 20,0 kW

· Ideal offer for small offices
· Cost saving solution with simple waterborne heating and cooling
· Hot water up to 45 °C

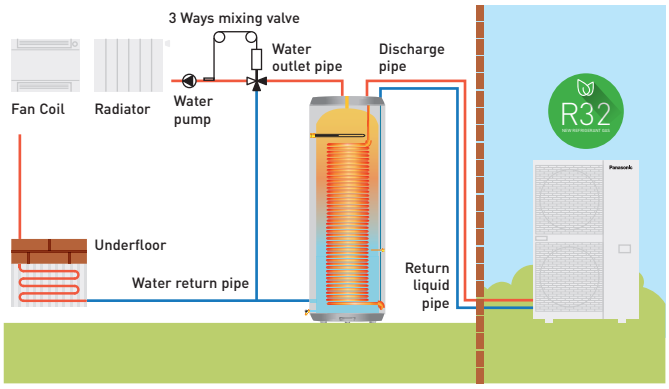

One by one system compatible list with PACi Elite

Model	Tank type	Product compatibility	Water outlet temperature range
PAW-VP380L	Heating and cooling	U-200PZH2E8	5 °C ~ 45 °C

1 High performance and high saving

· A7 COP 3,26, heating water temperature at 45 °C
· Maximum 45 °C water outlet temperature
· Energy efficiency class: A+++ (from A+++ to D)

2 Simple waterborne heating and cooling solution

· High temperature water without any boosters
· Installation cost can be saved without additional boosters and buffer tanks

3 Trusted quality

· Tank and heat exchanger made with stainless steel
· Internal and external pickling

PRO-HT Tank heating and cooling: PAW-VP380L.
Waterborne heating and cooling for floor heating, radiators or fan coils

PRO-HT Tank Heating and Cooling

High temperature hot water is efficiently produced without any boosters

Panasonic commercial PRO-HT Tank solutions can be combined with PACi to adapt various projects from high-end residentials to small offices.

Technical focus

- Water volume 380L
- Maximum hot water production 45 °C
- Tank and heat exchanger made with stainless steel
- Heating coil 52 m 316L
- Internal and external pickling
- Foam insulation 70 mm
- Tank material 2 mm 316L
- ABS external case

PRO-HT Tank			**PAW-VP380L**
Cooling capacity at 35 °C, water outlet 7 °C		kW	12,80
Heating capacity		kW	25,00
Heating capacity at +7 °C, heating water temperature at 45 °C		kW	23,00
COP at +7 °C with heating water temperature at 45 °C		W/W	3,26
Heating Energy Efficiency class at 35 °C (from A+++ to D)			**A+++**
ηsh (LOT1) [1]		**%**	**193**
Dimension	H x Ø	mm	1820 x 690
Shipping weight		kg	99
Water pipe connector			1 1/4"
Heating water flow (ΔT=5 K. 35 °C)		m³/h	3,9
Outdoor Unit			**U-200PZH2E8**
Sound pressure		dB(A)	57
Dimension	H x W x D	mm	1500 x 980 x 370
Net weight		kg	117
Piping connections	Liquid pipe	Inch (mm)	1/2 (12,07)
	Gas pipe	Inch (mm)	3/4 (19,05)
Refrigerant (R32) / CO_2 Eq.		kg	4,20 (1,0kg additional gas charge on site)
Pipe length range [2]		m	30
Elevation difference (in/out)		m	30 (OD above) 30 (OD below)
Pipe length for nominal capacity		m	7,5
Pipe length for additional gas		m	> 7,5
Additional gas amount		g/m	Refer to manual
Operation range - Outdoor ambient	Heat / Cool	°C	-20 ~ +24 / -15 ~ +46
Water outlet	Heat / Cool	°C	25 ~ 45 / 5 ~ 15

Accessories	
PAW-VP-RTC5B-PAC	Tank controller for PACi system

Accessories	
PAW-IU29/39	Additional heater

1) Seasonal space cooling/heating energy efficiency following COMMISSION REGULATION (EU) 811/2013. 2) The pipe length range is between indoor and outdoor, but does not include additional length for coil.

This product is designed to comply with the European Water Quality Directive 98/83/EC amended by 2015/1787/EU. The lifespan of the product is not guaranteed in the case of the use of groundwater, such as spring water or well water, the use of tap water when salt or other impurities are contained, nor in areas of acidic water quality. Maintenance and warranty costs related to these cases are the customer's responsibility.

Performance calculation in agreement with Eurovent. Sound pressure measured at 1 m from the outdoor unit and at 1,5 m height.

* Flow switch and water filter are not equipped.

R32 | A+++ ErP 35°C | 45°C OUTPUT WATER | -20°C OPERATION RANGE | 5 YEARS COMPRESSOR WARRANTY

Rating Conditions: Cooling Indoor 27°C DB / 19°C WB. Cooling Outdoor 35°C DB / 24°C WB. Heating Indoor 20°C DB. Heating Outdoor 7°C DB / 6°C WB. (DB: Dry Bulb; WB: Wet Bulb).
Specifications subject to change without notice. For detailed information about ErP / Energy Labelling, please visit our websites www.aircon.panasonic.eu or www.ptc.panasonic.eu.

PACi with Water Heat Exchanger · R32 Refrigerant

Panasonic introduces highly-efficient Water Heat Exchanger for PACi Series. This ground-breaking product gives further possibilities of PACi solutions by adding hydronic options.

WATER OUTLET TEMPERATURE
Cooling: 5 ~ 15 °C
Heating: 35 ~ 50 °C

Highly-efficient Water Heat Exchanger for PACi Series

System example.

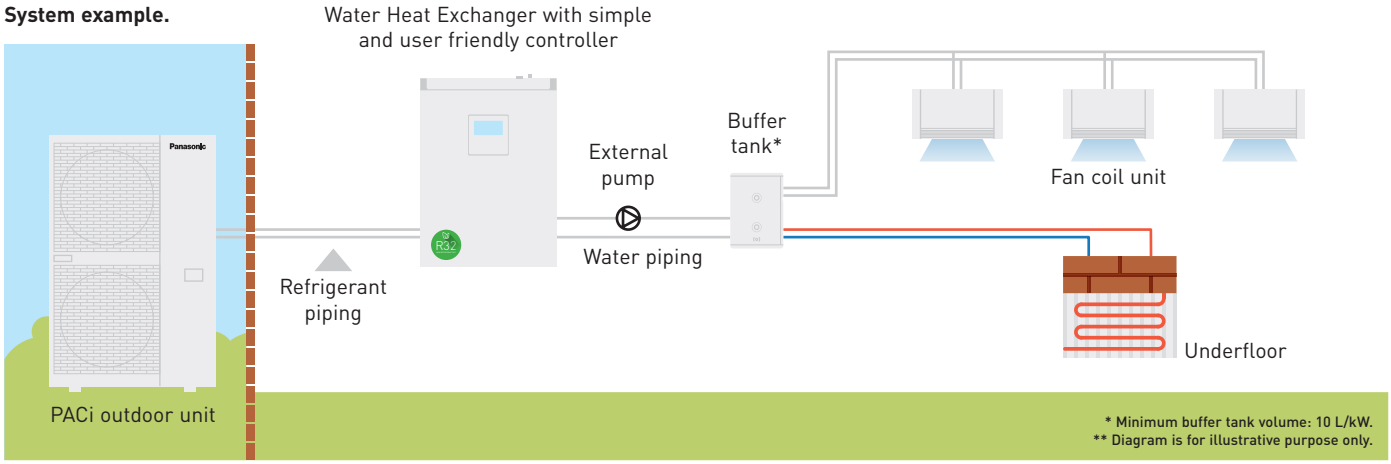

1 Cost Saving Solution
- A+++ Energy efficiency class (scale from A+++ to D)
- Cost effective water projects thanks to lower cost for PACi compared to VRF

2 Space saving & Flexible positioning
- 2 installation possibilities (Wall-mounted / Floor-standing)
- Compact, lightweight unit design, only 27kg

3 Easy Installation, Maintenance
- Quick mounting process
- Flow switch kit is included as a standard
- Direct access to electrical box

Space saving & Flexible positioning

Compact and light unit.
- Only 205 mm depth fits within a limited space
- Lightweight design at only 27kg, makes it easy to maneuver and position
- Maximum total refrigerant piping length: 90 m*

* 90 m for PAW-200W5APAC.

2 installation options.
- Wall-mounted and Floor-standing installation options are available. Free-up floor space by using the Wall-mounted installation
- Quick mounting process with its lightweight compact design
  Make fixing holes > Fix 2 screws > Hang the unit > Finish

ONLY 205 mm DEPTH | **LIGHT WEIGHT 27kg** | **PIPING LENGTH 90 m**

QUICK SIMPLE INSTALL | **INSTALLER FRIENDLY**

Wall-mounted.

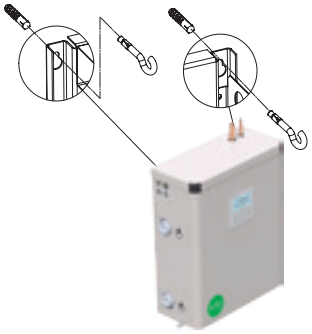

Floor-standing.

PACi Water Heat Exchanger (WHE) is ideal solution for small retails and offices.
This is the first PACi connected WHE system.
The investment costs can be amortised in a short period.

Quick installation with pre-assembled flow switch

The flow switches come pre-assembled with pipe fittings for ease of installation.

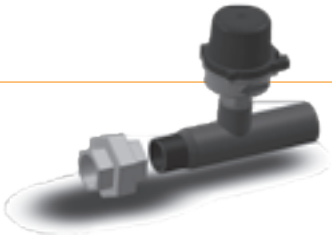

Easy maintenance operation from two points of access

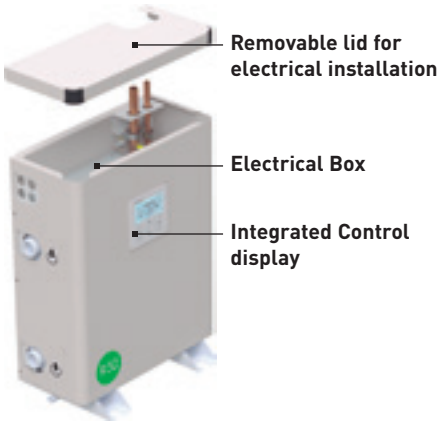

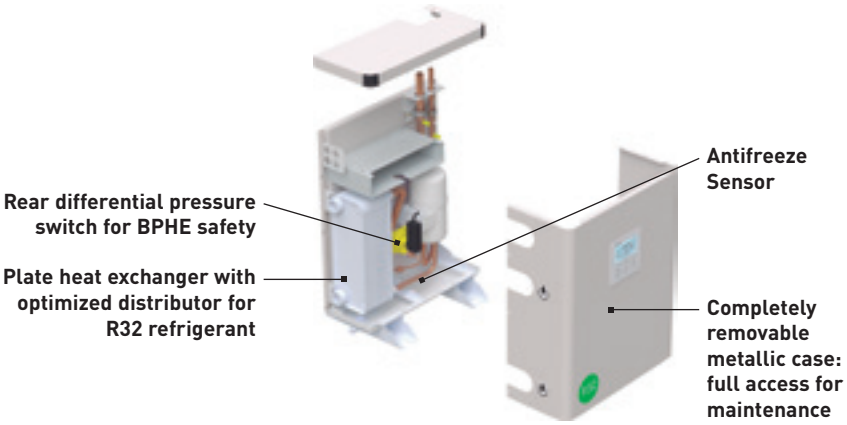

Application example

- Fulfilling R32 refrigerant needs to follow environmental perspective, Company policy
- Water solution to substitute existing boiler system
- Hydraulic system to reduce total amount of HFC refrigeration

Foodchain.

Small office.

PACi with Water Heat Exchanger for chilled and hot water production

Short-term investment

PACi Water Heat Exchanger is ideal for small offices and retails.
The investment costs can be amortised within a very short period.
This solution allows investors and operators to save money.

Professional solution

Water Heat Exchanger is compatible with R32 PACi.
Many air conditioning manufacturers selling R32 systems and it is becoming the standard refrigerant for split type air conditioning systems because R32 has a much lower global warming potential than R410A and can also provide higher efficiency.

Water Heat Exchanger			**PAW-200W5APAC**	**PAW-250W5APAC**
Cooling capacity [1]		kW	20,00	25,00
EER [1]		W/W	3,03	2,89
Heating capacity [2]		kW	23,00	28,00
COP [2]		W/W	2,98	2,95
ηsh (LOT1) [3]		**%**	**178**	**178**
Energy efficiency class (Scale A+++ to D) [4]			**A+++**	**A+++**
Dimension	H x W x D	mm	550 x 455 x 205	550 x 455 x 205
Net weight		kg	27	27
Water pipe connector		Inch	Male Thread 1 ¼	Male Thread 1 ¼
Cooling water flow (ΔT=5 K. 35 °C)		m³/h	3,45	4,30
Heating water flow (ΔT=5 K. 35 °C)		m³/h	4,15	4,85
Flow switch			Included	Included
Water filter			Included	Included
Outdoor Unit			**U-200PZH2E8**	**U-250PZH2E8**
Sound pressure	Cool / Heat (Hi)	dB(A)	59 / 61	59 / 63
Dimension	H x W x D	mm	1500 x 980 x 370	1500 x 980 x 370
Net weight		kg	117	128
Piping connections	Liquid pipe	Inch (mm)	3/8 (9,52)	1/2 (12,70)
	Gas pipe	Inch (mm)	1 (25,40)	1 (25,40)
Pipe length range		m	5 ~ 90	5 ~ 60
Elevation difference (in/out)		m	30	30
Pipe length for additional gas		m	30	30
Additional gas amount		g/m	60	80
Water outlet temperature range	Cool Min ~ Max	°C	+5 ~ +15	+5 ~ +15
	Heat Min ~ Max	°C	+35 ~ +50	+35 ~ +50
Operating range	Cool Min ~ Max	°C	-15 ~ +46	-15 ~ +46
	Heat Min ~ Max	°C	-20 ~ +24	-20 ~ +24

1) Data refers to 7 °C leaving chilled water temperature and 35 °C ambient air temperature, according to EN14511 standard. 2) Data refers to 45 °C leaving warm water temperature and 7 °C ambient air temperature according to EN14511 standard. 3) Following COMMISSION REGULATION (EU) No 813/2013 for low-temperature heat pumps. 4) Following COMMISSION REGULATION (EU) No 811/2013 for low-temperature heat pumps. Scale from A+++ to D.

R32 | A++ ErP 35°C | -20°C HEATING MODE | 46°C COOLING MODE | ADVANCED CONTROL | 5 YEARS COMPRESSOR WARRANTY

Rating Conditions: Cooling Indoor 27°C DB / 19°C WB. Cooling Outdoor 35°C DB / 24°C WB. Heating Indoor 20°C DB. Heating Outdoor 7°C DB / 6°C WB. (DB: Dry Bulb; WB: Wet Bulb).
Specifications subject to change without notice. For detailed information about ErP / Energy Labelling, please visit our websites www.aircon.panasonic.eu or www.ptc.panasonic.eu.

Panasonic Ventilation Solutions

Panasonic ventilation solutions for maximum savings and easy integration.

AHU Kit connects PACi outdoor units to Air Handling Units system [1)]

AHU Kit combines air conditioning and fresh air in just one solution.
The Panasonic AHU Kits offer a wealth of connectivity possibilities so can be easily integrated into many systems.
Besides the advantages in terms of indoor air quality, air conditioning offers also an energy saving potential. For example, while uncontrolled ventilation through open windows leads to large amounts of heat being lost to the outside during the heating season or gained from the outside during the cooling season, air conditioning systems provide possibilities to utilize the extra "free" energy in heat recovery modules so that overall operating costs will be reduced.

The larger area of the comfort range, the better the energy saving opportunities.
Application: Hotels, offices, server rooms or all large buildings where air quality control such as humidity control and fresh air and is needed.
Heat exchanger, Fan & Fan motor to be mounted in AHU Kit shall be provided in the field.
Contents of kit: Control for PCB and sensors.

1) Compatible with R32 models. Special setting is required.

Air Curtain with DX Coil

Highly efficient heating effect.
The combined air stream, which has a desirable low air current induction factor (mixing factor), can carry the selected initial temperature effect over long distances, and will reach the floor area while still at room temperature. This is necessary to avoid cooling down the interior spaces.

The Panasonic range of air curtains is designed for smooth operation and efficient performance. Air curtains produce a continuous stream of air blown from the top to the bottom of an open doorway and create a barrier that people and products can flow across, but air can't. Designed to improve energy efficiency, minimise heat loss from a building, and to allow retailers to keep doors open to encourage customers, our Air Curtains are suitable for connection to both VRF and PACi Systems.

Heating capacity comparison: Electrical air curtain / Panasonic air curtain

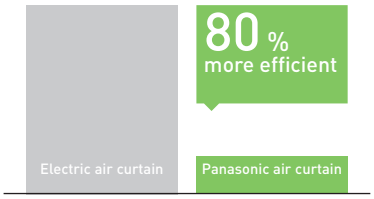

* With the U-100PZH2E5 on the PAW-20PAIRC-LS. Calculation method: Taking as consideration SCOP of the Panasonic combination of 6,0. If 100 is the energy needed for a air curtain, Panasonic Air curtain will need 1/(1-6)*100=20.

Electric Air Curtain

1 Newly designed to maximize performance

High Air volume upgraded 145 % compared to conventional model (in the case of FY-3009U1).

2 Comprehensive product line up

1,5 m wide model added in the line up.

3 Easier installation & maintenance

Simple structure for easy installation & maintenance.

			FY-3009U1	FY-3012U1	FY-3015U1
Width		mm	900	1200	1500
Voltage		V	220	220	220
Air volume	Hi / Lo	m³/h	1100/920	1400/1270	2000/1800
Consumption	Hi / Lo	W	76/70	94/85	131/110
Current	Hi / Lo	A	0,35/0,32	0,43/0,40	0,59/0,50
Air speed	Hi / Lo	m/s	10,50/8,50	9,50/8,00	10,50/9,50
Dimension	H x W x D	mm	900 x 231,5 x 212	1200 x 231,5 x 212	1500 x 231,5 x 212
Weight		kg	12,0	14,5	18,0
Sound pressure		dB(A)	48,5/45,0	48,5/44,5	51,5/48,0

Air Handling Unit Kit 3,6-25,0 kW for PACi. Compatible with R32 or R410A outdoor units

AHU Kit connects PACi outdoor units to Air Handling Units system.

The Panasonic AHU Kits offer a wealth of connectivity possibilities so can be easily integrated into many systems. Application: Hotels, offices, server rooms or all large buildings where air quality control such as humidity control and fresh air and is needed.

Panasonic AHU Kit, 3,6-25,0 kW connected to PACi outdoor unit

The Air Handling Unit Kit has been developed to better meet customer demand: IP 65 Box in order to be installed outside, 0-10V demand control* and easy control by BMS

* Only available with PACi Elite, from 3,6 kW to 25,0 kW.

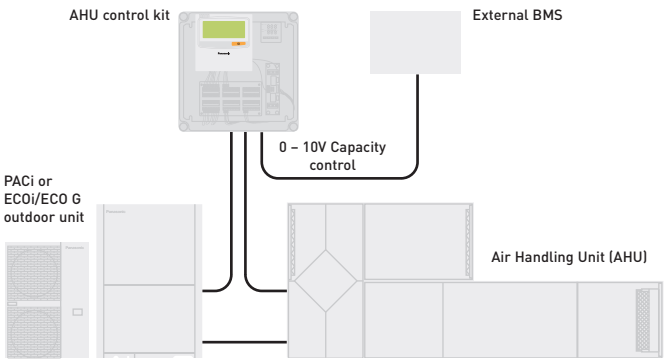

Demand control on the outdoor unit managed by external 0–10V signal.

Control option 1: PAW-280PAH2L

· The system's control is simple: control of actual suction temperature vs. set point
· Control works in the same way as that of any indoor unit
· Fan signal issued by the PCB (OFF while defrosting, for instance)

Control option 2: PAW-280PAH2

· System control by probe located at air intake. Sensor works as a 0–10V control thermostat which manages the set point temperature. Control to prevent cold draughts.
· All signals as per standard

Control option 3: PAW-280PAH2

· System control by external environment probe. Sensor works as a 0–10V control thermostat which manages the set point temperature. Enhances efficiency by adjusting capacity to the ambient temperature and enhances comfort as well.
· All signals as per standard

Control option 4: PAW-280PAH2

· System control by a 0–10V control working from an external BMS that manages the set point for the temperature or the capacity. Enhances efficiency by adjusting capacity and enhances comfort as well.
· All signals as per standard

Main components of mechanical ventilation systems

The main components of a mechanical ventilation system are the following: Air Handling Unit (AHU), air ducts and air distribution elements.

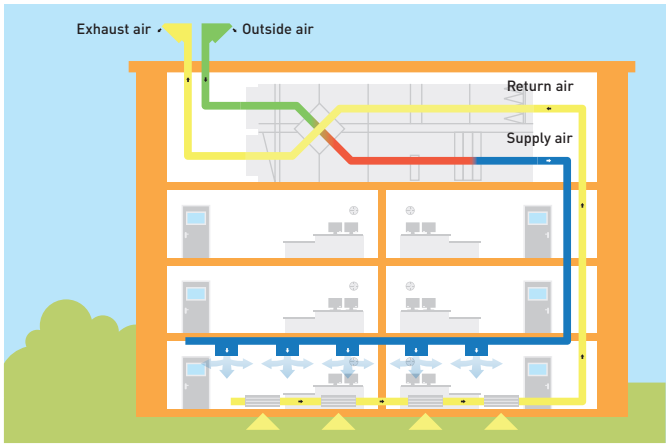

0-10V control

With the 0-10V demand control the capacity of the outdoor unit can be controlled by 20 steps.

Input Voltage* (V)	0	1,0	1,5	2,0	2,5	3,0	3,5	4,0	4,5	5,0	5,5	6,0	6,5	7,0	7,5	8,0	8,5	9,0	9,5			
Demand (% of nominal current)	No cut [1]	40	45	50	55	60	65	70	75	80	85	90	95	100	105	110	115	120	No limit / Full capacity [2]			
Indoor unit start / stop	Stop [1]	Start																				

1) No cut/Stop: AHU system / indoor unit is completely switched OFF.
2) No Limit: No restrictions applied by BMS to AHU system / indoor unit performance (equivalent to "full-load operation" of AHU system / indoor unit).

3 types of AHU Kit: Deluxe, Medium and Light

Model Code	IP 65	0-10V demand control*	Outdoor temperature shift compensation. Cold draft prevention
PAW-280PAH2	Yes	Yes	Yes
PAW-280PAH2M	Yes	Yes	No
PAW-280PAH2L	Yes	No	No

* With CZ-CAPBC2.

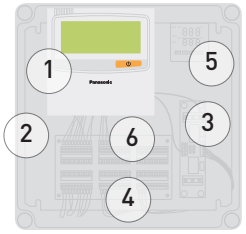

1. Remote control CZ-RTC2
2. Plastic IP 65 Box
3. PAW-T10 PCB for Dry Contact
4. 0-10V demand control PCB
5. Intelligent thermostat for:
   · Cold draft prevention
   · Outdoor temperature shift compensation
6. Terminal base for sensors and power supply

System & regulations. System overview
1. AHU Kit equipment (field supplied)
2. AHU Kit system controller (field supplied)
3. AHU Kit controller box (with control PCB)
4. Thermistor for gas pipe (E2)
5. Thermistor for liquid pipe (E1)
6. Thermistor for suction air
7. Inter-unit wiring
8. Outdoor unit

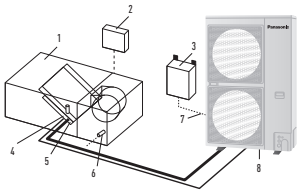

AHU Connection Kit

PCB, Power trans, Terminal block

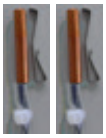

Thermistor x2 (Refrigerant: E1, E2)

Thermistor (Air: TA; 1 sensor)

Standard wired remote controller.

AHU PACi Elite	Cooling capacity	Heating capacity	Dimensions	Piping length	Elevation difference (in/out)
	Nominal	Nominal	H x W x D	Min / Max	Max
	kW	kW	mm	m	m
PAW-280PAH2	6,00 / 25,00	7,00 / 28,00	404x425x78	5 / 30*	10
PAW-280PAH2+PAW-280PAH2	50,00	56,00	404x425x78	5 / 30*	10

* For U-200PE2E8A and U-250PE2E8A.

AHU connection kit / System combination		Air volume	Dimensions	Piping length	Elevation difference (in/out)	Piping connections	
		Min / Max	H x W x D	Min / Max	Max	Liquid pipe	Gas pipe
Outdoor unit capacity	**AHU**	m³/min	mm	m	m	Inch (mm)	Inch (mm)
5,0 kW	PAW-280PAH2	8,00 / 13,00	404x425x78	5/30	10	1/4 (6,35)	1/2 (12,70)
6,0 kW	PAW-280PAH2	9,00 / 16,00	404x425x78	5/30	10	3/8 (9,62)	5/8 (15,88)
7,5 kW	PAW-280PAH2	12,00 / 25,00	404x425x78	5/30	10	3/8 (9,62)	5/8 (15,88)
10,0 kW	PAW-280PAH2	14,00 / 33,00	404x425x78	5/30	10	3/8 (9,62)	5/8 (15,88)
12,5 kW	PAW-280PAH2	19,00 / 35,00	404x425x78	5/30	10	3/8 (9,62)	5/8 (15,88)
14,0 kW	PAW-280PAH2	19,00 / 35,00	404x425x78	5/30	10	3/8 (9,62)	5/8 (15,88)
20,0 kW	PAW-280PAH2	28,00 / 66,00	404x425x78	5/70	10	3/8 (9,62)	1 (25,40)
25,0 kW	PAW-280PAH2	38,00 / 74,00	404x425x78	5/70	10	1/2 (12,70)	1 (25,40)

Optional parts: Following functions are available by using different control accessories:

CZ-RTC2 Timer remote controller.
· Operation-ON/OFF
· Mode select
· Temperature setting

* Fan operation signal can be taken from the PCB.

PAW-OCT, DC12 V outlet. OPTION terminal.
· Output signal= Cooling/Heating/Fan status
· Defrost
· Thermostat-ON

CZ-CAPBC2 Mini seri-para I/O unit (advanced version only).
· Easy integration in external AHU control systems and BMS
· Demand control: 40 to 115 % (5 % steps) of nominal current by 0–10V input signal*
· Target temperature setting by 0–10V or 0–140 Ω input signal*
· Mode select or/and ON/OFF control
· Fan operation control
· Operation status output/ Alarm output
· Thermostat ON/OFF control

* Demand control by external BMS cannot be combined with the demand control or target temperature setting accomplished by the thermostat. However, if simultaneous demand control and target temperature setting is needed, this can only be achieved by using a second (optional) CZ-CAPBC2 interface.

CZ-T10 terminal / PAW-T10 PCB to connect to T10 connector.
· A Dry contact PCB has been developed to easily control the unit
· Input signal operation ON/OFF
· Remote control prohibition
· Output signal Operation ON status maximum 230 V 5 A (NO/NC)
· Output signal alarm status max. 230 V 5 A (NO/NC)
· Alarm output (by DC12V)
· Additional available contacts:
  - External humidifier control (ON/OFF) 230 VAC 3 A
  - External fan control (ON/OFF) 12V DC
  - External filter status signal potential free
  - External float switch signal potential free
  - External leakage detection sensor or TH. OFF contact potential free (possible usage for external blow out temperature control)

Air flow rate m³/min

Outdoor unit	8,00	8,33	9,00	10,00	10,83	11,67	12,00	13,00	13,33	14,00	15,00	16,00	16,67	18,00	19,00	20,00	25,00	26,67	28,00	30,00	33,00	35,00	36,00	38,00	40,00	43,33	45,00	50,00	58,33	66,00	66,67	71,67	74,00	75,00	83,33	90,00
5,0 kW																																				
6,0 kW																																				
7,5 kW																																				
10,0 kW																																				
12,5 kW																																				
14,0 kW																																				
20,0 kW																																				
25,0 kW																																				

Standard range of air flow rate under standard conditions (air intake temperature in cooling mode from 18 to 32 °C DB).

Extended range of air flow rate under special conditions (air intake temperature in cooling mode from 18 to 30 °C DB).

Air Curtain with DX Coil, connected to the VRF or PACi Systems.

Compatible with R32 or R410A outdoor units.

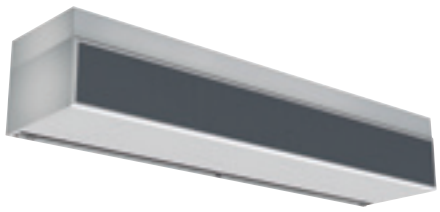

Highly efficient heating effect

The combined air stream, which has a desirable low air current induction factor (mixing factor), can carry the selected initial temperature effect over long distances, and will reach the floor area while still at room temperature. This is necessary to avoid cooling down the interior spaces.
Available in different lengths to suit requirements between 1 and 2,5 m, both air curtains have outlet grilles that can be adjusted to five different positions. The HS model can be installed up to a height of 3,0 m with the LS model up to 2,7 m. The outlet grilles can be easily adjusted into five positions to suit different installation requirements and the air filter can be accessed without the need for specialist tools.

- High performance with EC fan motor (40 % lower running costs compared to a standard AC fan motor)
- Easy Cleaning and Servicing
- Can be connected to either Panasonic VRF or PACi systems
- Built-in drain for cooling operation
- HS and LS models can be controlled via Panasonic's range of remote internet controls

The HS and LS models are ideal for connection to a ECOi or PACi system. With simple "plug and play" installation, both are fitted with an EC fan motor for a smooth operation and efficient performance. This fan guarantees 40 % lower running cost than with a standard AC fan motor. Air curtains run approximately 12 hours per day at shops, and efficient performance contributes to energy savings.

Intelligent Operation

Our air curtains combine airflow and heating / cooling technology to ensure optimum comfort and energy efficiency whilst also creating an effective barrier between indoor and outdoor environments. Design and installation is key to achieving the correct height / temperature settings to achieve optimum performance. Our air curtains are designed to answer the demands of the retail, commercial and industrial markets.

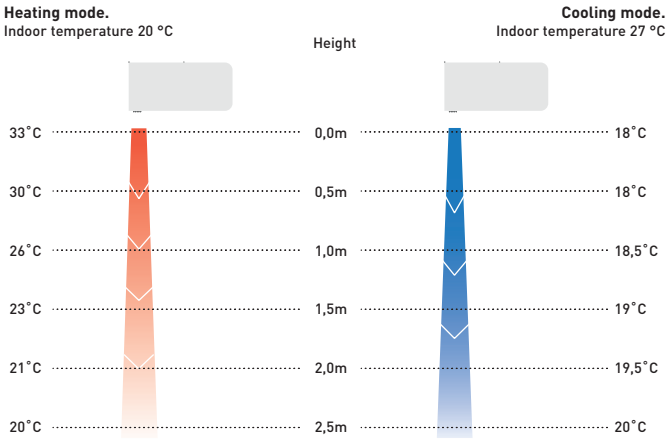

Optimised airflow velocity

1. Energy losses, no air curtain installed
2. Too low velocity air curtain – air curtain not efficient
3. Optimum results with the Frico air curtain connected to Panasonic VRF
4. Too high velocity air curtain – considerable turbulence, energy lost to the outside, air curtain not efficient

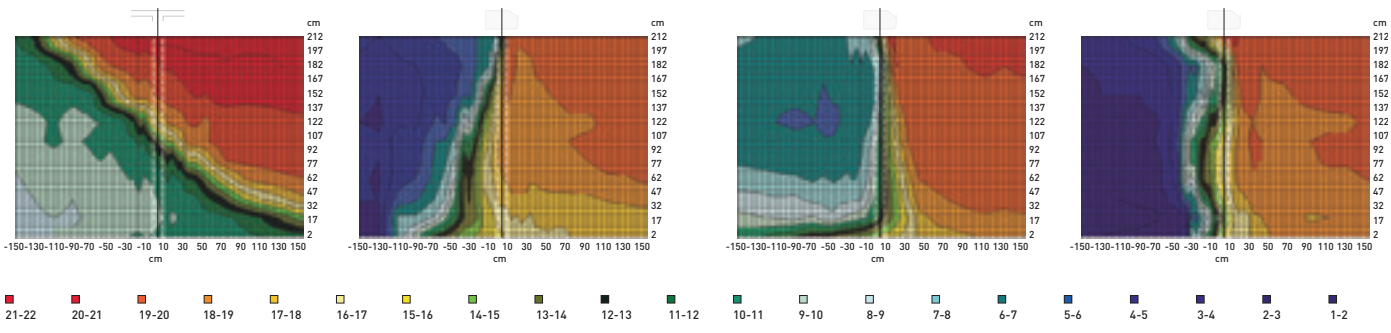

Opening without air curtain.
In an unprotected opening the cold air flows out and the cold storage room becomes much too warm.

Opening with air curtain, wrong angle.
If the angle is too small the hot air is blown into the cold storage room.

Opening with air curtain, too high speed.
Excessive speed creates turbulence, which causes energy loss and increases the cold storage temperature.

Opening with correctly adjusted air curtain.
With a correctly set air curtain unit there is a sharp separation between the different temperature zones.

High efficiency air curtain connected to your PACi or VRF installation. EC Fan motor for a smooth operation and an efficient performance. 2 types of air flow available: LS and HS! Easy installation, regulation, cleaning, service.

Technical focus

- Save up to 40 % energy costs by use of the integrated EC fan technology (higher efficiency than conventional AC fan, soft start and longer motor duration)
- 4 length of air curtain LS and HS are available 1,0, 1,5, 2,0 and 2,5 m
- Installation height up to 3,0 m
- Outlet grilles can be adjusted in five positions, to suite different indoor and installation requirements
- Control with Panasonic remote control systems (optional)
- Direct integration to BMS by optional Panasonic interfaces
- Trip dray included in all DX air curtain steps

Features

Comfort: Easy redirection of air flow by means of manual deflector.
Ease of use: Speed selector (high and low) on the unit itself.
Easy installation and maintenance: Easy installation. Compact dimensions improve installation and positioning. Easy cleaning of grid without opening of the unit.

How does it work?

Stale air from the room is taken in and ejected near the door. This creates a 'roll of air' that shields the door area, mixing with the colder incoming air. It then turns away from the door, back into the room and toward the intake screen, where it is partly drawn in again. This flow of air helps to create a barrier for heat loss yet at the same time refreshes room air

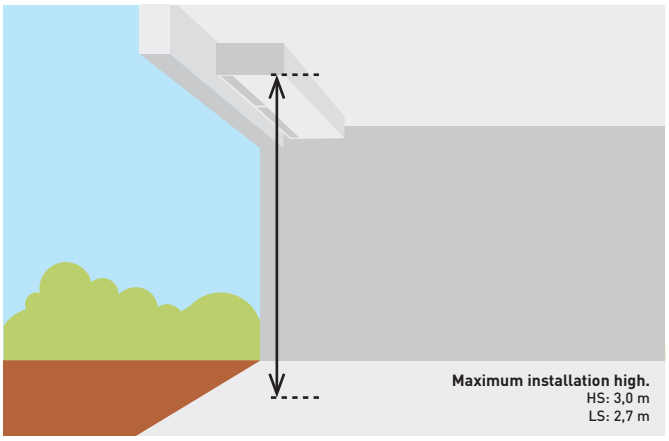

Outdoor unit			7,1 kW	10,0 kW	14,0 kW	20,0 kW
Air outlet height 2,7 m			**PAW-10PAIRC-LS**	**PAW-15PAIRC-LS**	**PAW-20PAIRC-LS**	**PAW-25PAIRC-LS**
Air volume	High	m³/h	1800	2700	3600	4500
Cooling capacity [1]	Max	kW	6,1	9,7	13,0	17,0
Heating capacity [2]	Max	kW	7,9	12,0	15,0	19,0
Heat Exchanger	Volume	L	1,67	2,85	3,94	5,03
Piping connections	Liquid pipe / Gas pipe	Inch (mm)	3/8 (9,52) / 5/8 (15,88)	3/8 (9,52) / 3/4 (19,05)	3/8 (9,52) / 7/8 (22,22)	3/8 (9,52) / 7/8 (22,22)
Electric consumption fan	230V / 50Hz	kW	0,30	0,50	0,60	0,80
Fan type			EC	EC	EC	EC
Current	230V / 50Hz	A	2,10	3,10	4,10	5,10
Sound Pressure [3]	Max	dB(A)	65	66	67	69
Dimension [4]	H x W x D	mm	260 (+140) x 1000 x 460	260 (+140) x 1500 x 460	260 (+140) x 2000 x 460	260 (+140) x 2500 x 460
Weight		kg	50	65	80	95
Door width		m	1,0	1,5	2,0	2,5
Refrigerant			R32/R410A	R32/R410A	R32/R410A	R32/R410A

Outdoor unit			10,0 kW	14,0 kW	20,0 kW	25,0 kW
Air outlet height 3,0 m			**PAW-10PAIRC-HS**	**PAW-15PAIRC-HS**	**PAW-20PAIRC-HS**	**PAW-25PAIRC-HS**
Air volume	High	m³/h	2700	3600	5400	6300
Cooling capacity [1]	Max	kW	9,1	13,0	19,5	23,7
Heating capacity [2]	Max	kW	11,8	15,8	23,6	27,6
Heat Exchanger	Volume	L	1,67	2,85	3,94	5,12
Piping connections	Liquid pipe / Gas pipe	Inch (mm)	3/8 (9,52) / 5/8 (15,88)	3/8 (9,52) / 3/4 (19,05)	3/8 (9,52) / 7/8 (22,22)	3/8 (9,52) / 7/8 (22,22)
Electric consumption fan	230V / 50Hz	kW	0,75	1,00	1,50	1,75
Fan type			EC	EC	EC	EC
Current	230V / 50Hz	A	4,10	5,50	8,20	9,60
Sound Pressure [3]	Max	dB(A)	66	67	68	68
Dimension [4]	H x W x D	mm	260 (+140) x 1000 x 460	260 (+140) x 1500 x 460	260 (+140) x 2000 x 460	260 (+140) x 2500 x 460
Weight		kg	55	65	85	110
Door width		m	1,0	1,5	2,0	2,5
Refrigerant			R32/R410A	R32/R410A	R32/R410A	R32/R410A

Accessories	
PAW-AIR1-DP	Optional drain pump

1) Cooling capacity DX Coil, air temperature in/out +27/+18 °C, R32 and R410. 2) Heating capacity condenser, air temperature in/out +20/+33 °C, R32 and R410. In the case of lower outdoor temperatures, an outdoor model with higher capacity may be necessary. 3) Measured in distance up to 5,0 m, direction factor 2, absorbing surfaces 200 m², Min / Max air volume. 4) 140 mm is the height of an electrical box if it is installed on the top.

BMS CONNECTIVITY

Rated Conditions Cooling Outdoor +35 °C DB Indoor +27 °C DB/+19 °C WB, Discharge temperature 16 °C. All combinations under rated conditions: Heating Outdoor +7 °C DB/+6 °C WB Indoor +20 °C DB. In case of lower outdoor temperatures a higher capacity outdoor unit model may be necessary.
Specifications subject to change without notice. For detailed information about ErP, please visit our websites www.aircon.panasonic.eu or www.ptc.panasonic.eu.

Panasonic PACi Elite can cool rooms down to 8 °C

Special application such as wine cellars.

COOLING ROOMS BETWEEN 8 °C WB AND 24 °C WB

Solutions for cold rooms. Set the room temperature to 8 °C

There is a complete range, from 3,6 to 22,0 kW. This unique solution is perfect for:
Wine cellars, ice cream factories, flower shops, supermarkets, grain stores, food storage, food processing, food distribution, lunchrooms, vegetable processing... Just like all the indoor units in the PACi range, these units can be monitored via the Internet, generating an alarm if there is a breakdown.

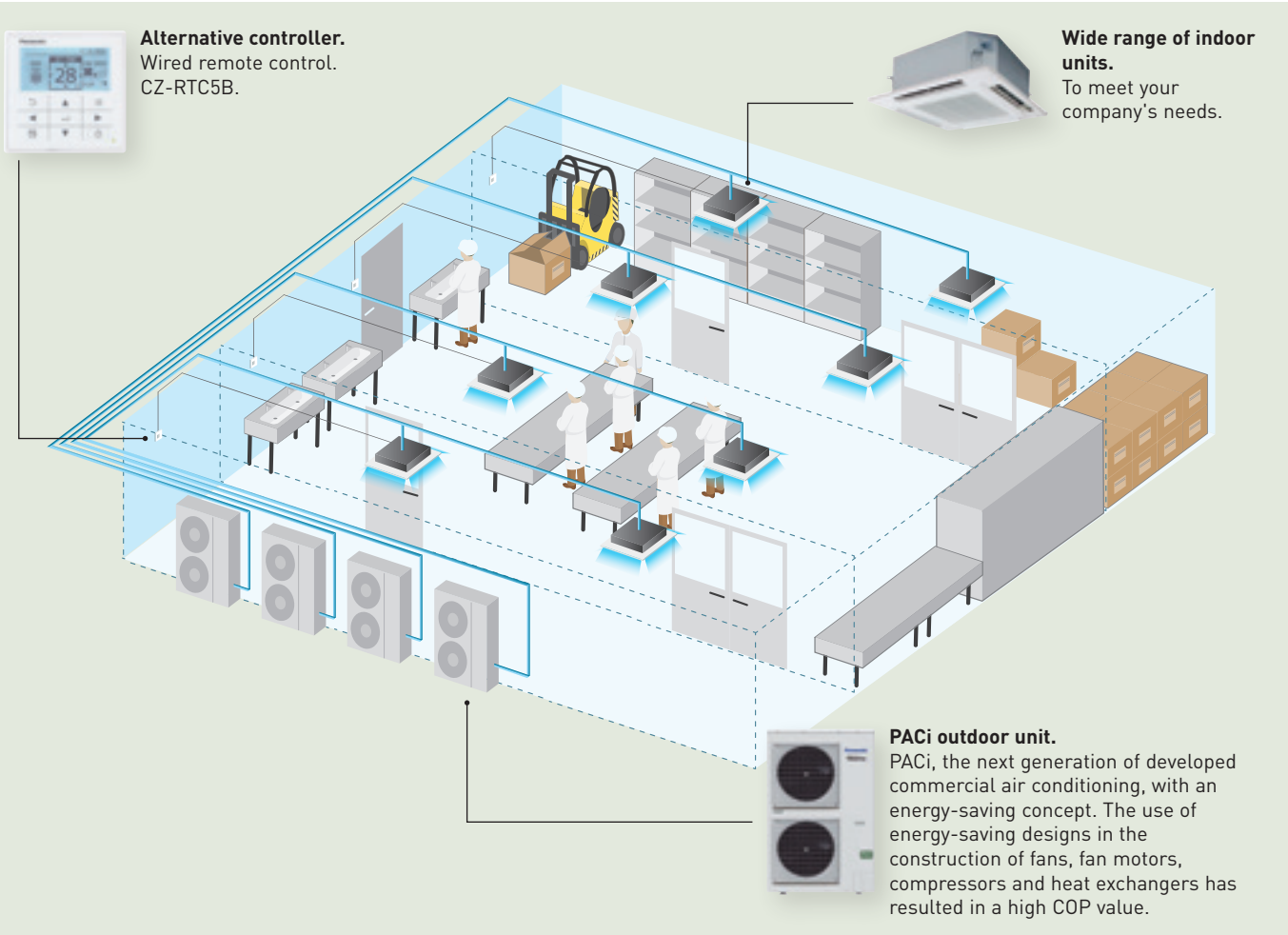

Wine cellars and special low temperature rooms

One of the main features of the PACi series is the possibility of adjusting the product for special applications, not just for regular heating and cooling applications. The purpose of this product information is to explain in detail these special applications that need a cooling operation to maintain the room temperature at +8 ~ +24 °C WB (or +10 ~ +30 °C DB). In order to do this in terms of enthalpy, the indoor unit needs to be overdimensioned and certain parameters need to be adjustable.

Temperature range for wine cellar		
	Indoor	Outdoor
Cooling operation	+8 ~ +24 °C WB	-5 (-15) ~ 43 °C DB

Temperature range – temperature range for wine cellar.

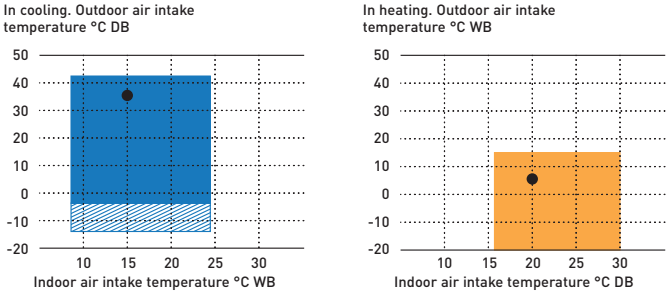

Only allowed after installation of wind and snow vents.

Area where cooling and heating capacity is established for this purpose.

Examples of installations:

To avoid the growth of bacteria and to increase food safety: Wine cellars, ice cream factories, flower shops, broiler factories, pantries in hotels, supermarkets, grain stores, food storage, food processing, food distribution, lunchrooms, salad processing ...

Application	Single						Twin		
Cooling capacity	3,5 kW	4,9 kW	5,8 kW	6,9 kW	9,3 kW	11,6 kW	13,6 kW	18,5 kW	23,2 kW
	U-36PZH2E5	U-50PZH2E5	U-60PZH2E5	U-71PZH2E5 U-71PZH2E8	U-100PZH2E5 U-100PZH2E8	U-125PZH2E5 U-125PZH2E8	U-140PZH2E5 U-140PZH2E8	U-200PZH2E8	U-250PZH2E8
PACi outdoor units									
PACi indoor units									
	S-60PK2E5B	S-71PK2E5B	S-100PK2E5B	S-60PK2E5B + S-60PK2E5B	S-71PK2E5B + S-71PK2E5B	S-71PK2E5B + S-71PK2E5B	S-100PK2E5B + S-100PK2E5B	—	—
	S-60PU2E5B	S-71PU2E5B	S-100PU2E5B	S-125PU2E5B	S-140PU2E5B	S-140PU2E5B	S-100PU2E5B + S-100PU2E5B	S-125PU2E5B + S-125PU2E5B	S-140PU2E5B + S-140PU2E5B
	S-60PT2E5B	S-71PT2E5B	S-100PT2E5B	S-125PT2E5B	S-140PT2E5B	S-140PT2E5B	S-100PT2E5B + S-100PT2E5B	S-125PT2E5B + S-125PT2E5B	S-140PT2E5B + S-140PT2E5B
	S-60PF1E5B	S-71PF1E5B	S-100PF1E5B	S-125PF1E5B	S-140PF1E5B	S-140PF1E5B	S-100PF1E5B + S-100PF1E5B	S-125PF1E5B + S-125PF1E5B	S-140PF1E5B + S-140PF1E5B
	S-60PN1E5B	S-71PN1E5B	S-100PN1E5B	S-125PN1E5B	S-140PN1E5B	S-140PN1E5B	S-100PN1E5B + S-100PN1E5B	S-125PN1E5B + S-125PN1E5B	S-140PN1E5B + S-140PN1E5B

* Above combinations require a special field setting. Please contact authorized Panasonic dealer. ** R410 models (U-PE2E5A,U-PE2E8A) are also compatible.

R22 Renewal. Fast, easy to install and Cost effective

An important drive to further reduce the potential damage to our ozone. It is often said that legislation is ruling our lives but sometimes it is there to help save lives. R22 phase out can be described as one of these and from Jan 1st 2010 the use of Virgin (new) R22 refrigerant was banned within the European Union.

Panasonic is doing its part

We at Panasonic are also doing our part – recognising that all finances are under pressure at the moment. Panasonic has developed a clean and cost effective solution to enable this latest legislation to offer less financial impact on your business.
The Panasonic renewal system allows good quality existing R22 pipe work to be re-used whilst installing new high efficiency R410A / R32 systems.
By bringing a simple solution to the problem Panasonic can renew all Split Systems and PACi systems; and depending upon certain restrictions we don't even limit the manufacturer's equipment we are replacing.

By installing a new high efficiency Panasonic R410A / R32 system you can benefit from around 30 % running cost saving compared to the R22 system.

Yes...
1. Check the capacity of the system you wish to replace
2. Select from the Panasonic range the best system to replace it with
3. Follow the procedure detailed in the brochure and technical data

Simple...

Why renewal?

Unique R22 Renewal from Panasonic: Fast, easy to install and cost effective.

- Panasonic refrigerant oil doesn't react to the most common oil types used in air-conditioning systems. This ensures the mix of oil does not damage the units. Therefore installations are easier
- All Panasonic PACi units can be installed in R22 pipings, no specific models are available
- Up to 33 Bar! When there is any doubt about the strength of the piping, the maximum working pressure can be reduced to 33 Bar with a setting in the software of the outdoor unit

Reuse of existing piping (renewal design & installation)

Notes on reuse of existing refrigerant piping.
It is possible for each series of PE, PEY, PZH, PZ series outdoor unit to reuse the existing refrigerant piping without cleaning when obtained under certain conditions. Make sure that the requirements under the section "Notes on reuse of existing refrigerant piping", "Measurement procedure for renewal" and "Refrigerant piping size and allowable piping length" will be satisfied in order to carry out.
Also, check the items with regard to section "Safety" and "Cleaning".

1. Prerequisite

- If the refrigerant used for the existing unit is other than R22, R407C and R410A / R32, the existing refrigerant piping cannot be used.
- If the existing unit has another use than air conditioning, then existing refrigerant piping cannot be used.

2. Safety

- If there is a hollow, crack or corrosion on the piping, make sure to install new piping.
- If the existing piping is other than capable of reuse of piping as shown in the flowchart, make sure to install new piping.
- In case of multiple operation, use our genuine branch piping for refrigerant R410A / R32.

A local supplier shall assume responsibility for the defects and hollows on the reuse of existing piping surface and recognition of reliability of the piping strength. There is no guarantee that we take responsibility for such damages.
The operational pressure of the refrigerant R410A / R32 becomes higher compared to R22. In the worst case, a lack of compressive strength may lead to piping explosion.

3. Cleaning

- When the refrigerant oil used for the existing unit is other than the listed below, make sure to install new piping or wash it thoroughly before reusing it.
  [Mineral Oil] SUNISO, FIORE S, MS
  [Synthesized oil] alkyl benzene oil (HAB, parallel freeze), ester oil, ether oil (PVE only)

If the existing unit is GHP type, it is necessary to wash the piping thoroughly.

- If the existing pipes in the outdoor and indoor units remain disconnected, make sure to install a new piping or wash it thoroughly before reusing it.
- If the discoloured oil or residue remains in the existing piping, make sure to install a new piping or wash it thoroughly before reusing it. See "Deterioration Criteria for Refrigerant Oil" in table 3.
- If the compressor of the existing air conditioner has a failure history, make sure to install a new piping or wash it through thoroughly before reusing it.

When reusing the existing piping as it is without removing dirt and dust, inadequate piping could result a renewal appliance in failure.

Notes on renewal for simultaneous operation of multiple units

Only main pipe is applicable for using the different diameter size.
In case of different diameter size for the branch pipes, a new installation work for a standard size is necessary.
Be sure to use our genuine branch piping for refrigerant R410A / R32.

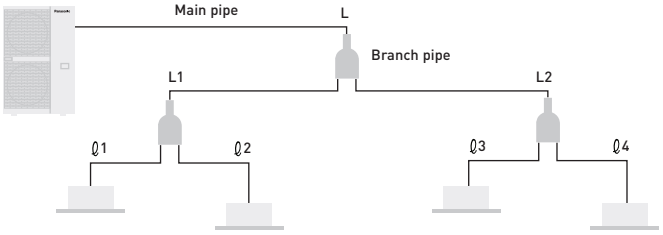

Notes on renewal for simultaneous operation of multiple units

Capacity class	Standard liquid pipe size	Standard gas pipe size
Type 50	Ø 6,35	Ø 12,70
Type from 60 to 140	Ø 9,52	Ø 15,88
Type 200	Ø 9,52	Ø 25,40
Type 250	Ø 12,70	

- Only the main pipe L can be used among different diameter's existing piping
- Installation work as a standard size is capable for L1, L2, ℓ1 - ℓ4 piping
- Be sure to use our genuine branch piping for refrigerant R410A / R32

1. In case of single unit:
   It is not necessary to charge with additional refrigerant until the chargeless pipe length in the table 2.
   If the pipe length is exceeding the charge less pipe length, charge with additional refrigerant amount per 1 m according to the equivalent length.

2. In case of simultaneous operation of multiple units:
   Calculate the refrigerant charging amount according to the calculating method of the standard piping diameter.
   As to the additional refrigerant charging amount per 1 m, refer to the additional amount in the table 2.

Measurement procedure for Renewal

Observe the following procedure when reusing the existing piping or carrying out renewal installation work.
Flowchart of existing piping measures criteria for PE, PEY, PZH, PZ series outdoor unit.

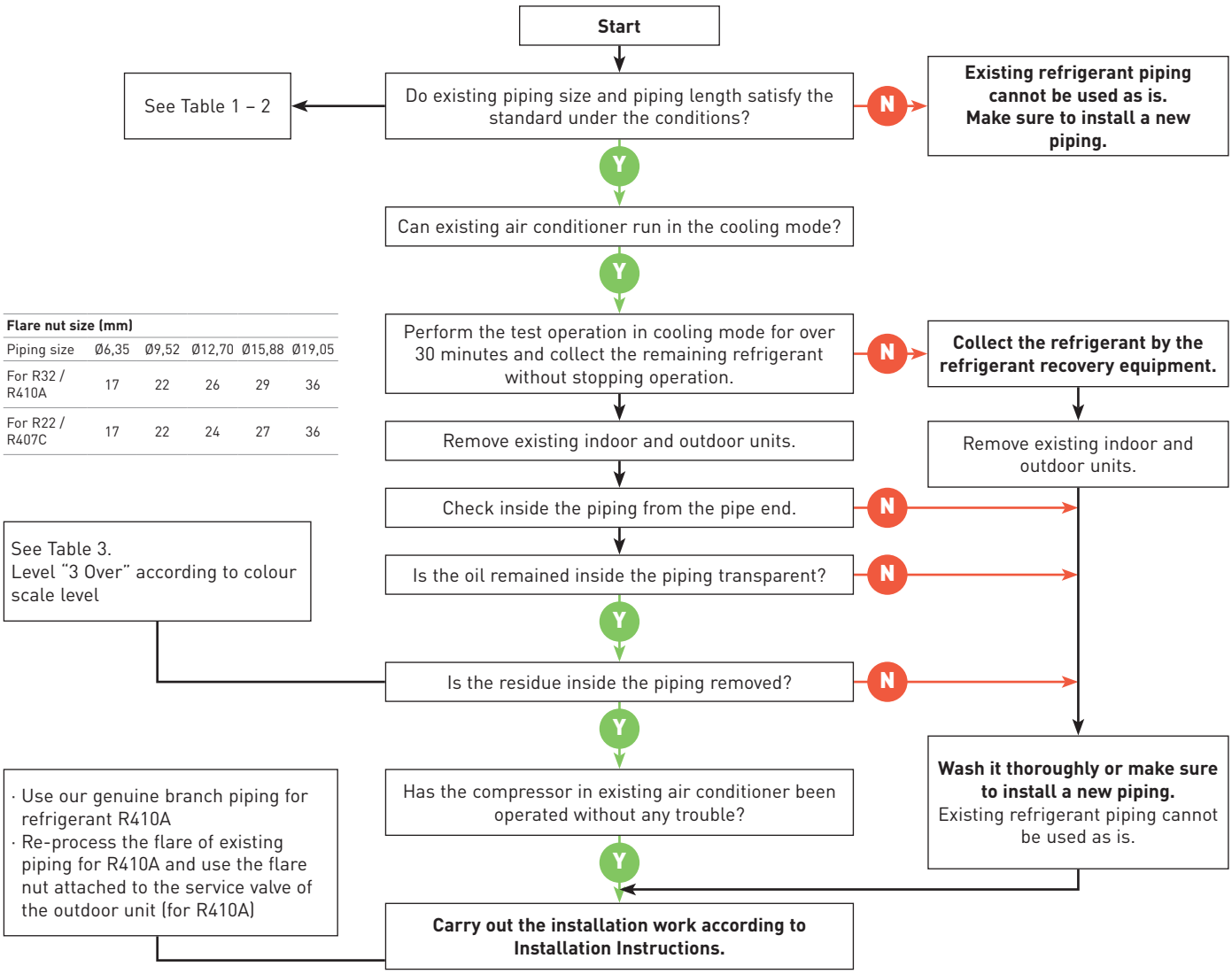

Flare nut size (mm)

Piping size	Ø6,35	Ø9,52	Ø12,70	Ø15,88	Ø19,05
For R32 / R410A	17	22	26	29	36
For R22 / R407C	17	22	24	27	36

Refrigerant piping size and allowable piping length

Check if reuse of existing refrigerant piping is possible based on the following chart.
The standards other than this one (difference of elevation, etc.) are identical to the requirements of ordinary refrigerant piping.

Table 1 Reusable existing piping (mm)

Material	O				1/2 H, H*			
External diameter	Ø 6,35	Ø 9,52	Ø 12,70	Ø 15,88	Ø 19,05	Ø 22,22	Ø 25,40	Ø 28,58
Thickness	0,80	0,80	0,80	1,00	1,00	1,00	1,00	1,00

* It is impossible to reuse the size of Ø 19.05, Ø 22.22, Ø 25.4 and Ø 28.58 for material O. Change to material 1/2H or material H.

Table 2 - 1 Refrigerant piping size: 3,6 - 14,0 kW type (mm)

Liquid pipe		Ø 6,35			Ø 9,52			Ø 12,70	
Gas pipe		Ø 9,52	Ø 12,70	Ø 15,88	Ø 12,70	Ø 15,88	Ø 19,05	Ø 15,88	Ø 19,05
PE / PZH	Type 50	×	Standard 40 m (30 m)	◎ 40 m (30 m)	□ 20 m (15 m)	□ 20 m (15 m)	×	×	×
PEY / PZ	Type 60 Type 71	×	▽ 10 m (10 m)	□ 10 m (10 m)	▽ 30 m (20 m)	Standard 50 m (20 m)	×	□ 25 m (10 m)	×
Additional refrigerant charging amount per 1 m		20 g/m			40 g/m			80 g/m	
PE / PZH	Type 60 Type 71	×	▽ 10 m (10 m)	□ 10 m (10 m)	▽ 30 m (30 m)	Standard 50 m (30 m)	×	□ 25 m (15 m)	×
	Type 100 Type 125 Type 140	×	×	×	×	Standard 75 m (30 m)	◎ 75 m (30 m)	□ 35 m (15 m)	□ 35 m (15 m)
PEY / PZ	Type 100 Type 125 Type 140	×	×	×	×	Standard 50 m (30 m)	◎ 50 m (30 m)	□ 25 m (15 m)	□ 25 m (15 m)
Additional refrigerant charging amount per 1 m		20 g/m			50 g/m			80 g/m	

How to see table definition (example):
In case of type 71, standard size is liquid pipe Ø 9,52 / gas pipe Ø 15,88.
There is a limitation to liquid pipe Ø 9,52 / gas pipe Ø 12,70 and to liquid pipe Ø 12,70 / gas pipe Ø 15,88.
However, they are applicable for different diameter's pipes.

Table 2 - 2 Refrigerant piping size: 20,0 - 25,0 kW type (mm)

Liquid pipe		Ø 9,52			Ø 12,70			Ø 15,88		
Gas pipe		Ø 22,22	Ø 25,40	Ø 28,58	Ø 22,22	Ø 25,40	Ø 28,58	Ø 22,22	Ø 25,40	Ø 28,58
PZH	Type 200	▽ 80 m (30 m)	Standard 100 m (30 m)	◎ 100 m (30 m)	▽ 50 m (15 m)	□ 50 m (15 m)	□ 50 m (15 m)	×	×	×
	Type 250	×	×	×	▽ 80 m (30 m)	Standard 100 m (30 m)	◎ 100 m (30 m)	▽ 65 m (20 m)	□ 65 m (20 m)	□ 65 m (20 m)
Additional refrigerant charging amount per 1 m		40 g/m			80 g/m			120 g/m		

◎ Allowable
▽ Cooling capacity down
□ Limited piping length
× Unallowable
50 m Maximum piping length
(50 m) Charge less piping length in a single connection

Table 3 Deterioration Criteria for Refrigerant Oil

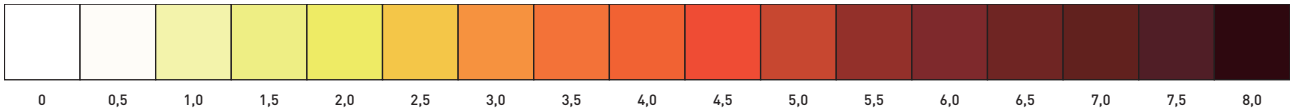

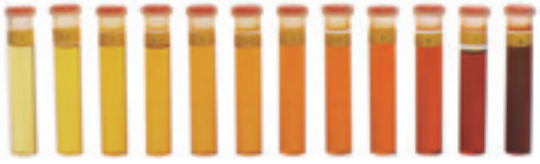

Accessories and Control

Branch Pipes, Header

CZ-P224BK2BM
Branch pipe (capacity after distribution is 22,4 kW or less).

CZ-P680BK2BM
Branch pipe (from 22,4 kW to 68 kW).

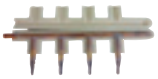

CZ-P3 HPC2BM
Header.

Plenums

CZ-DUMPA90MF2
Air Inlet Plenum for S . .PF1E5B 60 & 71.

CZ-DUMPA160MF2
Air Inlet Plenum for S . .PF1E5B 100, 125 & 140.

CZ-56DAF2
Air Outlet Plenum for S . .PF1E5B 36, 45 & 50.

CZ-90DAF2
Air Outlet Plenum for S . .PF1E5B 60 & 71.

CZ-160DAF2
Air Outlet Plenum for S . .PF1E5B 100, 125 & 140.

CZ-TREMIESPW705
Air Outlet Plenum for S-200PE2E5.

CZ-TREMIESPW706
Air Outlet Plenum for S-250PE2E5.

Outdoor accessories

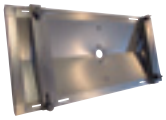

PAW-WTRAY
Tray for condenser water compatible with outdoor elevation platform.

PAW-GRDSTD40
Outdoor elevation platform 400x900x400 mm.

PAW-GRDBSE20
Outdoor base ground support for noise and vibration absorption (600 x 95 x 130 mm, 500kg).

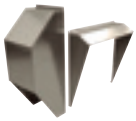

PAW-WPH9
Wind protection shield for U-71PZH2E5/8, U-71PE1E5A/8A and U-100/125PEY1E5/8.

PAW-WPH7
Wind protection shield for U-100/125/140PZH2E5/8, U-100/125/140PE1E5A/8A and U-140PEY1E8.

Panels

CZ-KPU3W
Standard panel for 4 Way 90x90 Cassette.

CZ-KPU3AW
Econavi panel for 4 Way 90x90 Cassette.

CZ-KPY3AW
Panel for 4 Way 60x60 Cassette size 700x700 mm.

CZ-KPY3BW
Panel for 4 Way 60x60 Cassette size 625x625 mm.

Other Accessory

CZ-CNEXU1
nanoe X Generator Mark 1 kit for 4 Way 90x90 Cassette.

CZ-CENSC1
Econavi energy savings sensor.

CZ-CSRC3
Remote temperature sensor.

VRF Smart Connectivity

Panasonic Schneider Electric

SER8150R0B1194
Remote Controller Panasonic Net Con, RH, No PIR, R1/R2.

SER8150R5B1194
Remote Controller Panasonic Net Con, RH, PIR, R1/R2.

VCM8000V5094P
Wireless Zigbee Pro module / Green Com card.

SEC-TEA-R-230-5045
Smart Terminal Controller ZigBee Pro High Power, External Antenna, 4UI/4AO/5DO, 220-240 VAC.

SEC-TEA-R-24-5045
Smart Terminal Controller ZigBee Pro High Power, External Antenna, 4UI/4AO/5DO, 24 VAC.

MPM-UN-0I4-5045
Universal network controller with Building Expert and StruXureWare integration, High Power, 6 I /6O, Modbus.

MPM-RAEC-5045
Universal network controller Cable extension.

HRCEP14R
Hotel Room Expansion Module 14 indoor units.

HRCPBG28R
Hotel Room Controller 28 indoor units.

HRCPDG42R
Hotel Room Controller w/Display 42 indoor units.

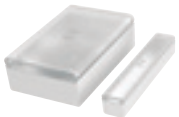

SED-WDC-G-5045
Door / window wireless sensor.

SED-MTH-G-5045
Wall / ceiling (motion) wireless sensor.

SED-CO2-G-5045
CO_2 sensor.

SED-TRH-G-5045
Sensor with room temperature and humidity.

SED-WLS-G-5045
Water leakage sensor.

FAS-00
Cover frame. Silver.

FAS-01
White.

FAS-03
Glossy translucent white.

FAS-05
Light tan wood.

FAS-06
Dark brown wood.

FAS-07
Dark black wood.

FAS-10
Brushed steel finish.

Controller and touch controllers for Hotels with Dry Contacts

PAW-RE2C4-MOD-WH
Modbus RS-485 touch room controller with I/O, White.

PAW-RE2C4-MOD-BK
Modbus RS-485 touch room controller with I/O, Black.

PAW-RE2D4-WH
Touch display control with 2 digital inputs, White.

PAW-RE2D4-BK
Touch display control with 2 digital inputs, Black.

Hotel sensors for Dry Contacts

PAW-WMS-DC
Wall motion sensor 24 V.

PAW-WMS-AC
Wall motion sensor 240 V AC.

PAW-CMS-DC
Ceiling motion sensor 24 V.

PAW-CMS-AC
Ceiling motion sensor 240 V AC.

PAW-24DC
Power supply 24 V.

PAW-DWC
Door or window contact.

Panasonic AC Smart Cloud

CZ-CFUSCC1
Panasonic AC Smart Cloud. Cloud internet control. Up to 128 groups. Controls 128 units.

PAW-MVN0AC-V
PAW-MVN0AC-K
3G communication package (SIM Card included). V, K: Depending on countries.

Centralised Controls. Connection with 3rd Party Controller

CZ-CAPDC2
Serial parallel device controlling outdoor units, up to 4 units.

CZ-CAPC3
Adaptor for ON/OFF control of external devices.

CZ-CAPBC2
Mini series parallel device controlling indoor units, maximum 1 group and 8 indoor unit.

CZ-CFUNC2
Communication Adaptor. Up to 128 groups. Controls 128 units.

Accessories Interfaces

CZ-CAPWFC1
Commercial WLAN Adaptor.

PAW-AC2-MBS-16P
PAW-AC2-MBS-64P
PAW-AC2-MBS-128P
Modbus Interface for 16, 64 or 128 indoor units.

PAW-AC2-KNX-16P
PAW-AC2-KNX-64P
KNX Interface for 16 or 64 indoor units.

PAW-AC2-BAC-16P
PAW-AC2-BAC-64P
PAW-AC2-BAC-128P
BACnet Interface for 16, 64 or 128 indoor units.

PAW-RC2-KNX-1i
KNX Interface.

PAW-RC2-MBS-4
Modbus interface to control 4 indoor/groups.

PAW-RC2-MBS-1
Modbus Interface.

PAW-MBS-TCP2RTU
ModBus RTU Slave devices.

PAW-RC2-BAC-1
BACnet Interface.

CZ-TACG1
Panasonic Comfort Cloud for internet control.

CZ-CAPRA1
RAC interface adapter for integration into P-Link, plus external input and alarm/status output.

Individual Controls

CZ-RTC6*
NEW Wired remote controller (non-wireless).

CZ-RTC6BL*
NEW Wired remote controller with Bluetooth®.

CZ-RTC5B
Design wired remote controller with Econavi function and datanavi.

CZ-RWS3 + CZ-RWRU3W
Infrared remote controller for 4 Way 90x90 Cassette.

CZ-RWS3
Infrared remote controller for Wall-mounted and 4 Way 60x60 with panel.

CZ-RWS3 + CZ-RWRT3
Infrared remote controller for Ceiling.

CZ-RWS3 + CZ-RWRC3
Infrared remote controller for all indoor units.

Centralised Controls

CZ-64ESMC3
System Controller with Schedule timer. Operation with various function from center station.

CZ-ANC3
Central ON/OFF controller, up to 16 groups, 64 indoor units.

CZ-256ESMC3
Simplified load distribution ratio (LDR) for each tenant. Intelligent Controller (Touch screen panel).

Accessories PCB

PAW-T10
T10 interface PCB with digital and relay connections.

PAW-PACR3
Redundancy of 2 or 3 systems; for PACi and ECOi.

PAW-SERVER-PKEA
Redundancy of 2 units TKEA / PKEA.

Accessories Cables

CZ-T10
Cable for all the T10 functions.

PAW-FDC
Cable to operate external EC fan.

PAW-OCT
Cable for all option monitoring signals.

PAW-EXCT
Cable with force Thermo OFF/leakage Detection.

Commercial VRF Systems

Professional solutions for commercial projects.
Panasonic VRF System is specifically designed for energy saving, easy installation and high efficiency performance, with a wide choice of outdoor and indoor unit models and unique features which are designed for the most demanding offices and big buildings.

VRF Highlighted Features

ECOi. Electrical VRF			ECO G. Gas Powered VRF	
2-Pipe Mini ECOi	**2-Pipe ECOi EX**	**3-Pipe ECOi EX**	**2-Pipe ECO G GE3**	**3-Pipe ECO G GF3**
		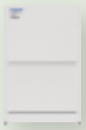		
Capacity range				
4-10 HP	8-80 HP	8-48 HP	16-60 HP	16-25 HP
Extreme temperatures operation				
-20 °C	-25 °C	-20 °C	-21 °C	-21 °C
Number of indoor units				
15	64	52	64	24
Simultaneity ratio				
50 ~ 130 %	200 %	150 %	—	50 ~ 200 %
Indoor units				
All (check restrictions)				
Controls				
All				
Other ranges integration				
PACi full control integration + Domestic integration by accessory				

Panasonic provides an extensive range of solutions for medium-sized and large buildings. Combining the best option to satisfy all needs and site restrictions.

Uniquely, you can choose from both Electrical VRF and Gas-powered VRF systems from Panasonic, delivering best choice that really makes a difference to our customers

Providing a large choice in indoor units, you can also connect water heat exchangers, air handling units and ventilation units with or without a heat exchanger. And all managed from a simple and powerful stand-alone remote control, new centralised controls or cloud connection with 3G embedded. This cutting edge control technology is called VRF Smart Connectivity, combining the expertise of VRF communication and a leading BEMS company to maximise comfort and efficiency while also reducing installation costs.

Panasonic ECOi is Eurovent certified

Panasonic's VRF systems - ECOi range is now certified by Eurovent*. The Eurovent certification verifies the performance ratings of heating and cooling systems following European standards. Those data provides products efficiency with full transparency for the benefit of customers and professionals.

* Reference website: https://www.eurovent-certification.com/en.

Energy saving

Inverter Plus System.
Inverter Plus System classification highlights Panasonic's highest performing systems.

All inverter compressors.
Multiple large-capacity all inverter compressors (more than 14 HP). Two independently controlled inverter compressors achieve high efficiency. Redesigned components in the body provide performance improvement especially in the rated cooling condition and EER performance.

Econavi.
Intelligent Human Activity Sensor and Sunlight Sensor technologies that can detect and reduce waste of energy by optimising air conditioner operation according to room conditions. With just one touch of a button, you can save energy.

Gas powered.
ECO G technology offers the best in energy efficiency. ECO G gas VRF is specially designed for buildings where the electricity is restricted or CO_2 emissions must be reduced.

High COP.
High efficiency models performs higher COP than standard units and standard combinations.

Better efficiency & Value for Domestic Hot Water.
Energy efficiency class up to A+ in a scale from A+ to F.

High performance

Down to -25 °C in heating mode.
The ECOi EX system works in heating mode with performance data at outdoor temperature down to -25 °C.

Cooling with outdoor temperature up to 52 °C.
The ECOi EX system works in cooling mode with performance data at outdoor temperature up to 52 °C.

Operation range.
The PRO-HT Tanks work with an outdoor temperature is as low as -20 °C.

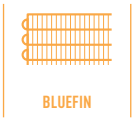

Bluefin.
Panasonic has extended the life of its condensers with an original anti-rust coating.

Self-diagnosing function.
By using electronic control valves past warnings are stored. This makes it easier to diagnose malfunctions, reducing service labour and therefore costs.

Automatic fan operation.
Convenient microprocessor control automatically adjusts fan speed to High, Medium or Low, corresponding to room sensor and maintains comfortable airflow throughout the room.

Mild Dry
By intermittent control of compressor and indoor unit's fan, "Mild Dry" gives you comfort. It realizes efficient dehumidification according to room temperature.

Comfortable auto-flap control.
When the unit is first turned on, flap position is automatically adjusted in accordance with the cooling or heating operation.

Automatic restart.
Automatic restart function for power failure. Even when power failure occurs, preset programmed operation can be reactivated once power is resumed.

Air Sweep.
The air sweep function moves the flap up and down in the air outlet, directing air in a "sweeping" motion around the room and providing comfort in every corner.

Built-in drain pump.
Maximum head 50cm (or 75cm for U type) from the bottom of the unit.

R22 renewal.
The Panasonic renewal system allows good quality existing R22 pipe work to be re-used whilst installing new high efficiency R410A systems.

High performance.
A7 COP 6,70 for ECOi 3-Pipe in case of heat recovery. For PRO-HT Tank.

DHW.
The PRO-HT tank provides low cost domestic hot water.

High temperature.
PRO-HT can provide a maximum 65 °C water.

5 Years Warranty.
We guarantee the outdoor unit compressors for five years.

High connectivity

Panasonic AC Smart Cloud.
The AC Smart Cloud from Panasonic allows you to have complete control of all your installations. In a simple click, receive status updates from all your units in real-time, preventing breakdowns and optimizing costs.

Internet control.
A next generation system providing user-friendly remote control of air conditioning or heat pump units from everywhere, using a simple Android™ or iOS smartphone, tablet or PC via the internet.

BMS connectivity.
The communication port can be integrated into the indoor unit and provides easy connection to, building management system, providing control of your Panasonic heat pump.

Panasonic: delivering TOP energy efficiencies for many years

Particularly suitable for retail, hotels and office applications

Outstanding efficiency at part load conditions:
Panasonic ECOi EX model covers up to 30 % part load with extremely high efficiency.

EER comparison of Panasonic ECOi EX 2-Pipe ME2 at different partial load

Load %	100 %	80 %	60 %	50 %	40 %	30 %
18 HP High Efficiency model	4,54	5,30	6,37	7,12	8,23	6,93
18 HP Space saving model	3,38	3,97	4,75	5,25	5,13	4,97

Conditions: Outdoor temperature 35 °C DB, Room temperature 19 °C WB.

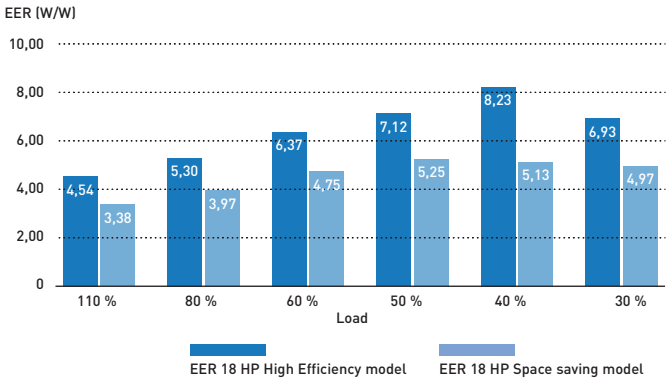

COP comparison of Panasonic ECOi EX 2-Pipe ME2 at different partial load

Load %	100 %	80 %	60 %	50 %	40 %	30 %
18 HP High Efficiency model	3,89	5,42	6,90	6,94	6,59	6,11
18 HP Space saving model	3,43	4,90	6,36	6,59	6,33	5,92

Conditions: Outdoor temperature 0 °C WB, Room temperature 20 °C DB.

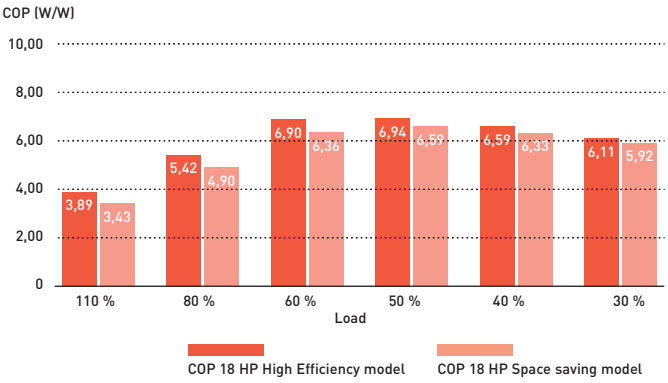

* Data from Panasonic official technical data book.

Excellent SEER and SCOP values for VRF 2 and 3-Pipe

Panasonic have a extremely high SEER and SCOP values following LOT21 (seasonal space cooling/heating energy efficiency by COMMISSION REGULATION (EU) 2016/2281).

	Mini ECOi					2-Pipe							3-Pipe				
	4 HP	5 HP	6 HP	8 HP	10 HP	8 HP	10 HP	12 HP	14 HP	16 HP	18 HP	20 HP	8 HP	10 HP	12 HP	14 HP	16 HP
SEER	7,9	7,5	7,3	6,3	6,4	7,4	6,8	6,7	7,2	6,4	7,6	7,0	7,0	7,1	6,4	6,7	6,0
SCOP	4,9	4,4	4,2	4,2	4,3	4,8	4,3	4,7	4,3	4,1	4,3	4,1	4,9	4,3	4,3	4,1	3,8

Efficient defrost operation

Panasonic uses the second unit to defrost the first unit. This makes the system more efficient during defrost and does not affect comfort.

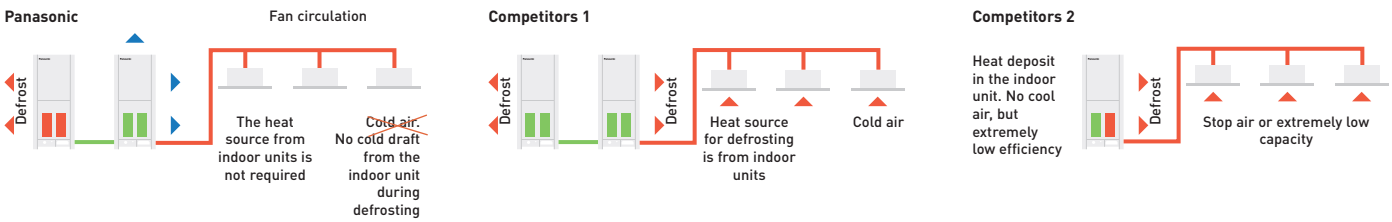

Panasonic ECOi operates at as low as -25 °C

This unique feature demonstrate the supremacy of Panasonic ECOi EX Series.
Panasonic use the second unit to defrost the first unit. This makes the system more efficient during defrost and does not affect the comfort.

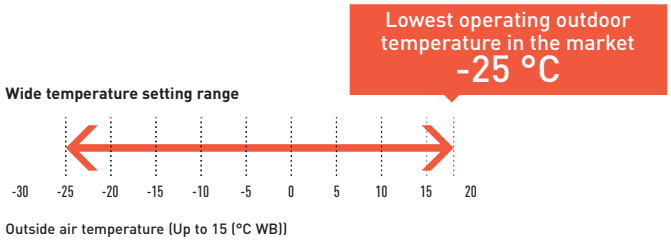

Panasonic VRF:
TOP in comfort

Since 2006, all Panasonic VRF systems have included special VET technology, with variable coolant temperature, as standard.

Variable Evaporation and Condensation Temperature

Our 'smart logic' system checks the temperature every 30 seconds, automatically adjusting coolant temperature according to actual demand and outdoor conditions. This ensures better energy performance at all times.

Temperature varies from 16 °C to 3 °C.
Similarly, the condensation temperature is also variable and is adjusted to the room thermal load, within a range of 33 ~ 55 °C.

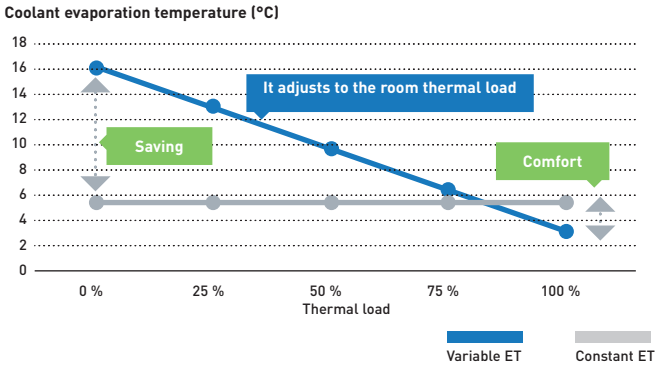

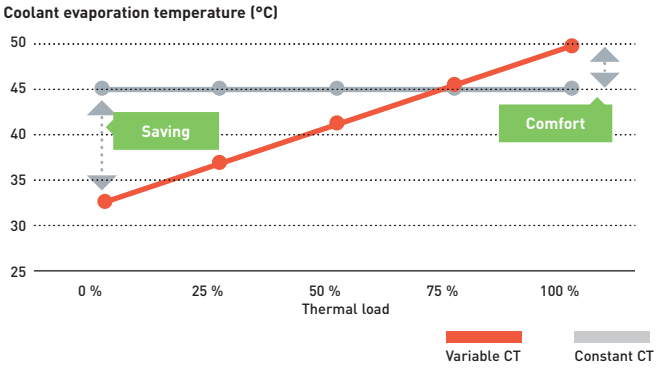

Example of cooling mode (heating mode is also available)

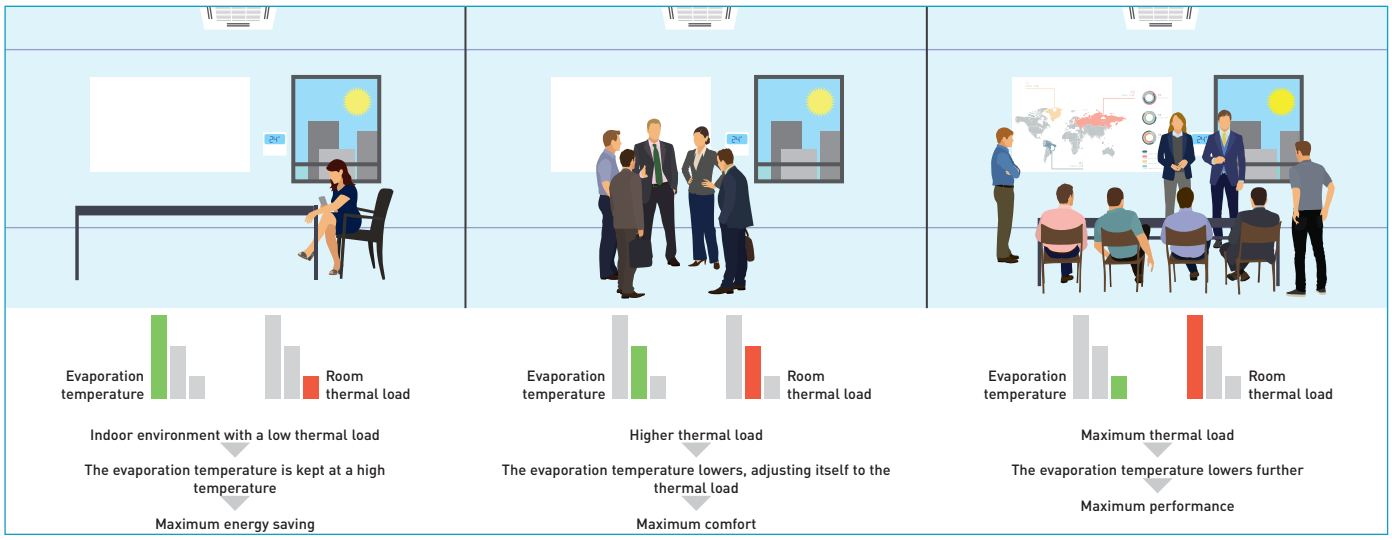

Technical focus Variable temperatures

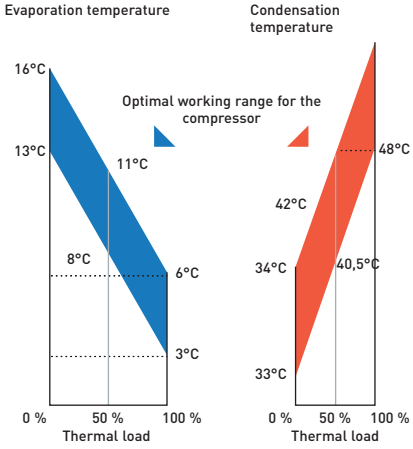

Control of the discharge temperature

This special function is available in all of Panasonic VRF systems' indoor units to guarantee maximum comfort for the end user.
For example, in cooling mode, if the temperature of the discharged air was below 10 °C, the user may feel discomfort, just as he would do in heating mode if the temperature was far too high.
With the Panasonic control of the discharge air temperature, this can be adjusted within a cooling range of 7–22 °C.

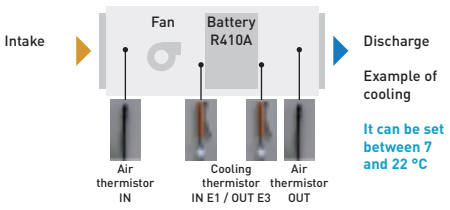

Benefits
- The air will never be too cold or too warm
- Cooling and Heating function
- Comfort
- Energy saving
- It prevents the formation of condensation within ducts and vents, improving levels of hygiene

Solutions for Restaurants

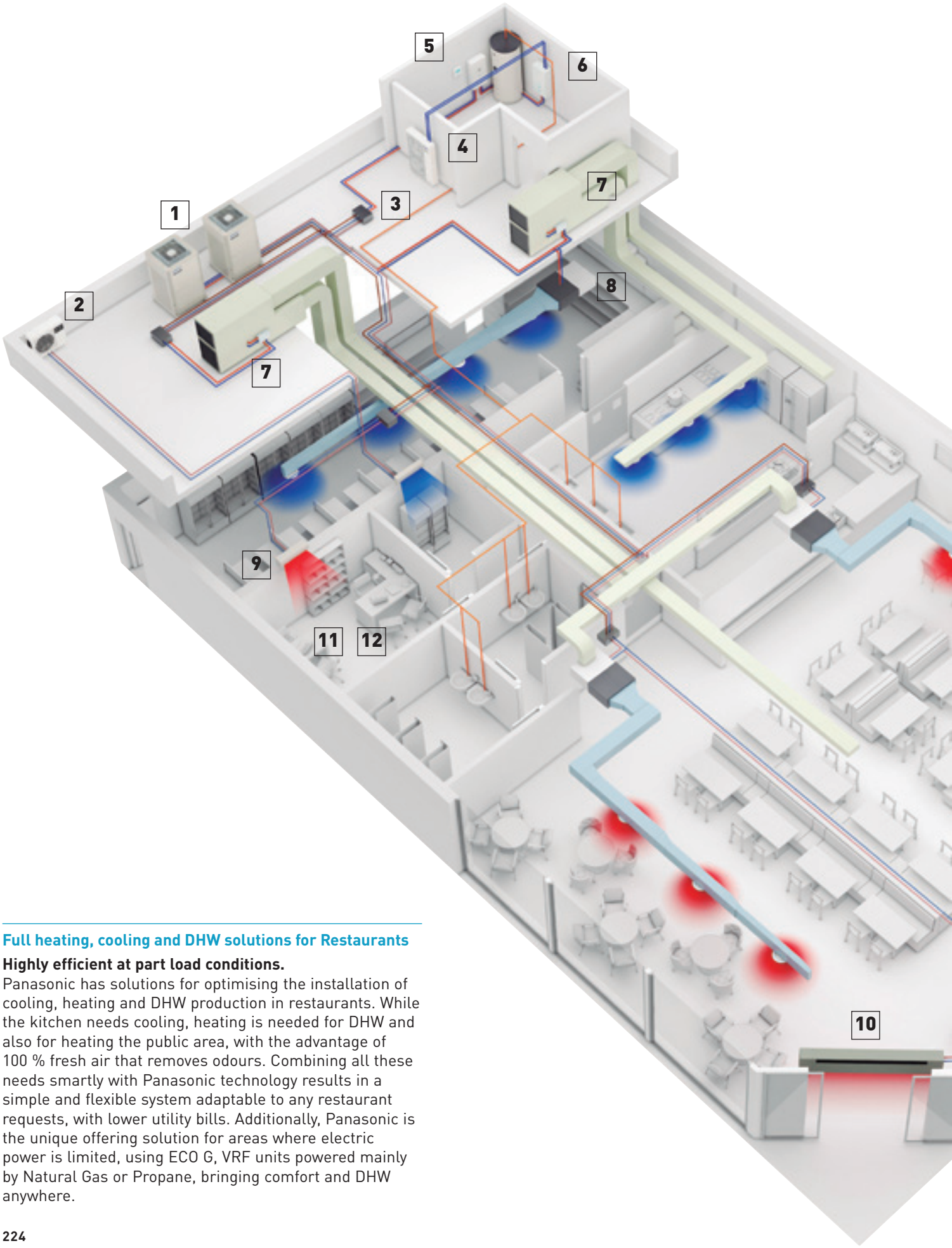

Full heating, cooling and DHW solutions for Restaurants

Highly efficient at part load conditions.
Panasonic has solutions for optimising the installation of cooling, heating and DHW production in restaurants. While the kitchen needs cooling, heating is needed for DHW and also for heating the public area, with the advantage of 100 % fresh air that removes odours. Combining all these needs smartly with Panasonic technology results in a simple and flexible system adaptable to any restaurant requests, with lower utility bills. Additionally, Panasonic is the unique offering solution for areas where electric power is limited, using ECO G, VRF units powered mainly by Natural Gas or Propane, bringing comfort and DHW anywhere.

1

ECOi (Electric VRF).
ECOi electrical VRF is specifically designed for the most demanding hotels. High efficiency system. Extended operating range to provide heating at outdoor temperature as low as -20 °C. Suitable for refurbishment projects.

2

TKEA outdoor unit for server room.
Steady cooling, nonstop, even at -20 °C and still with high efficiency. Ready for continuous operation and easy to connect 2 systems to automatically alternate and ensure server rooms are kept cool.

3

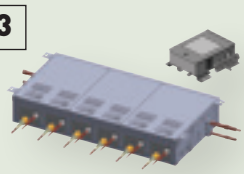

3-Pipe control box kit.
New Heat Recovery box to connect multiple indoor units with just one box, 4, 6 and up to 8 indoor units or groups
This is good advantage specially in hotels applications, where space for connecting several boxes is limited.

4

Aquarea T-CAP.
Ideal for heating, cooling and for production of big quantities of hot water at 65 °C, Aquarea have a extremely quick return on investment and a low CO_2 footprint.

5

Control your way.
Wide variety of controls, from simple user control to full system control via remote access functionality. Touch panel and consumption control.

6

Hydrokit for ECOi. Water at 45 °C.
Producing LT hot water, compatible with both ECOi, heat pump and heat recovery outdoors.

7

Air Handling Unit kits for efficient ventilation.
The new AHU kit is specially designed to improve the efficiency of the pre-heating or pre-cooling process of the ventilation.

8

Hide Away, for power and efficiency.
Super silent units deliver the ideal air supply. Units available from 1,5 kW providing precise temperature control even in small rooms. Two models available: slim unit for height restricted areas (MM unit only 200 mm deep), another which allows 100 % fresh air (MF).

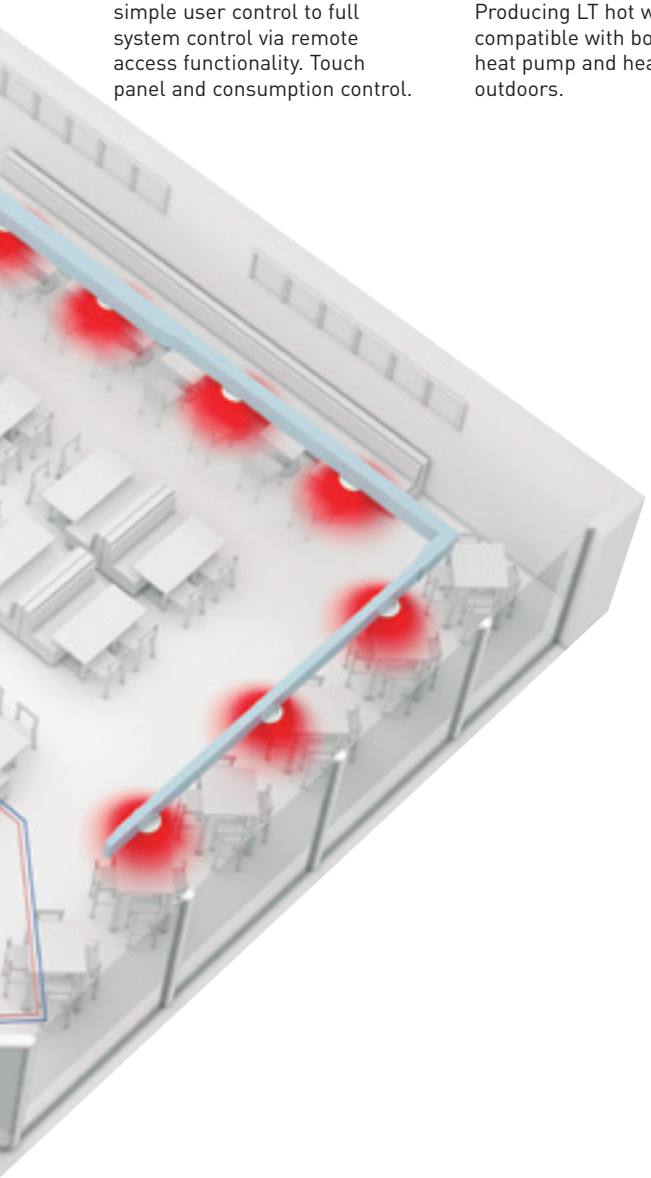

9

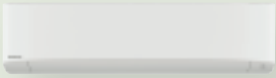

Wall-mounted.
The K2 Type Wall-mounted unit has a stylish smooth panel which not only looks good but is also easy to clean.
The unit is also smaller, lighter and substantially quieter than previous models making it ideal for small offices and other commercial applications.

10

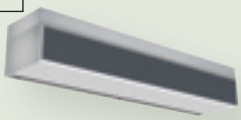

Air Curtain with DX Coil.
The Panasonic range of air curtains is designed for smooth operation and efficient performance.

11

Protocol friendly.
Great flexibility for integration into your KNX / Modbus / LonWorks / BACnet projects allows fully bi-directional monitoring and control of all the functioning parameters. Range of solutions to control locally or remotely the full system in bi-directional mode.

12

Panasonic AC Smart Cloud.
Taking your business under control. New service function makes maintenance works simpler.

Your entire hotel with superior comfort, control and savings too

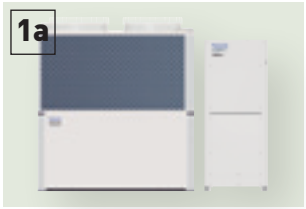

Hybrid system.
Gas + Electricity Hybrid system. Taking advantage of Gas and Electricity to achieve the most efficient performance and maximum energy savings.

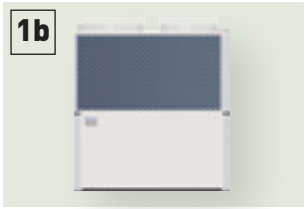

ECO G (Gas heat pump).
ECO G gas VRF is designed for buildings where the electricity is restricted or CO_2 emissions must be reduced. Sanitary hot water is produced for free, all year round.

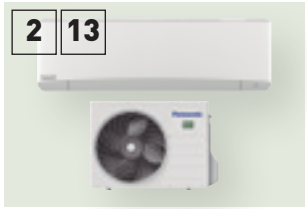

TKEA outdoor unit for server room.
Steady cooling, nonstop, even at -20 °C and still with high efficiency. Ready for continuous operation and easy to connect 2 systems to automatically alternate and ensure server rooms are kept cool.

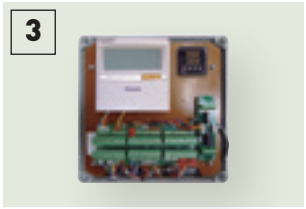

Air Handling Unit kits for efficient ventilation.
The new AHU kit is specially designed to improve the efficiency of the pre-heating or pre-cooling process of the ventilation.

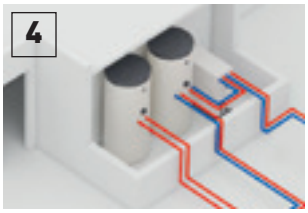

Domestic Hot Water production and buffer tanks.
Panasonic has developed a wide range of efficient domestic hot water tanks and buffer tanks.

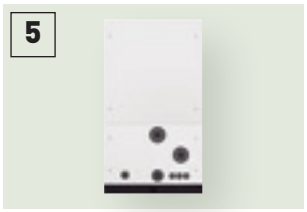

Hydronic units.
For obtaining hot and cold water for heating and refrigeration (Aquarea Air radiators, underfloor heating, radiators...)

ECOi (Electric VRF).
ECOi electric VRF is specifically designed for the most demanding hotels. High efficiency system. Extended operating range to provide heating at outdoor temperature as low as -20 °C.

PRO-HT Tank DHW.
DHW tank with maximum outlet temperature 65 °C. Ideal solution for high demand of hot water such as shower, spa, swimming pool.

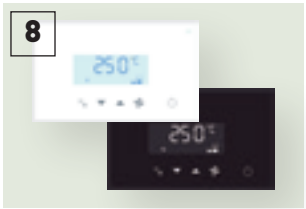

Control your way.
Wide variety of controls, from simple user control to full system control via remote access functionality. Touch panel, web server, consumption control, smartphone control... everything is possible.

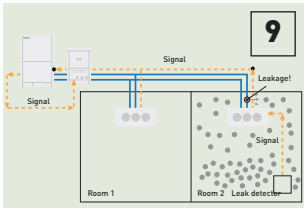

Direct leak detection method for the safety.
Panasonic Pump Down System meets requirements by the Safety of Building Occupant (BS-EN378).
The safest solution for hotel rooms.

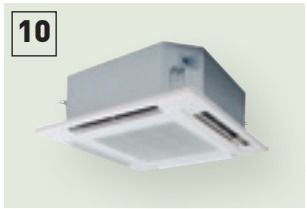

Wide range of indoor units.
Complete range of indoor units that fits any need. All units provided with supply air temperature sensor and low operation sound level to guarantee maximum guests comfort. From 1,5 kW up to 30,0 kW.

Panasonic AC Smart Cloud.
Take control of all your premises around the world from a single device. Centralise control of your business premises, from wherever you are, 24/7.

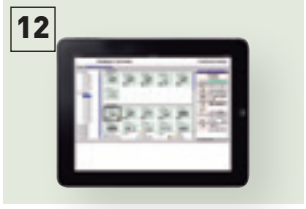

Protocol friendly.
Great flexibility for integration into your KNX / Modbus / LonWorks / BACnet projects allows fully bi-directional monitoring and control of all the functioning parameters.

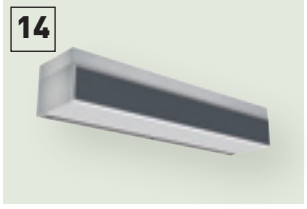

Air Curtain with DX Coil.
The Panasonic range of air curtains is designed for smooth operation and efficient performance.

Maximum savings on hot water production.
Hot water for swimming pool, spa and laundry for free thanks to the residual heat generated by the ECO G units.

Condensing unit with natural refrigerant.
Panasonic CO_2 unit is the natural choice for an energy saving and environmentally friendly solution.

Panasonic offers the widest range in HVAC, DHW and ventilation available. That enables us to offer the most suitable solution 24 hours a day, 365 days a year.
Panasonic Solutions ensure not only a higher customer satisfaction but also a lower energy bill.

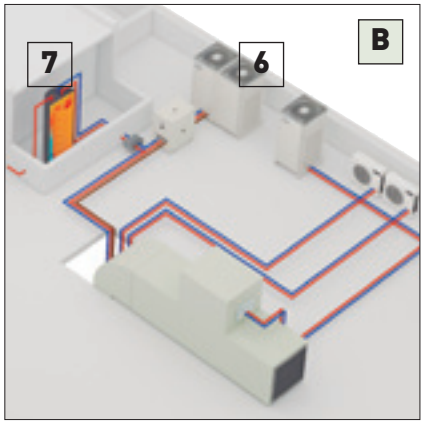

A

Option A: Hybrid Solution. Gas + Electric: When large quantities of hot/cold water is needed.

- ECO G (Gas heat pump)
- Water heat exchanger
- Aquarea HT to produce hot water up to 65 °C
- Air Handling Unit kit to connect the ECO G to the Air Handling Unit
- TKEA Wall-mounted to cool the server rooms efficiently

B

Option B: Full Electric Solution 2 and 3-Pipe. When flexibility is needed and electricity power availability is not an issue.

- ECOi (Electric VRF)
- Direct expansion indoor units
- Air Handling Unit (AHU) kit to connect the ECOi to the AHU
- TKEA Wall-mounted to cool the server rooms efficiently
- Panasonic Pump Down System

Innovative solutions for retail

Heating and cooling solutions for retail applications

Panasonic has developed solutions for retail applications and office applications where return on investment is a key factor! The comfort inside the shop is key for a good customer experience in the shop.
From local control or from Panasonic new cloud control system, a detail status of the heating and cooling system can be displayed, analysed and optimised in order to improve the efficiency, reduce the running time and increase the life time of the units.

8 reason why Panasonic is the best solution for your retail:

- Complete solution
- Flexibility and adaptation
- Go green retail: low CO_2 emissions
- Comfort - high customer satisfaction
- Future expansion
- Panasonic offers efficient systems meeting expectations over the years
- High quality of service with Panasonic pro-partner installation team
- The system will still operate up to 25 % of the connected indoor units. System will not stop when up to 25 % of indoor units have power supply breakdown when they are on mode

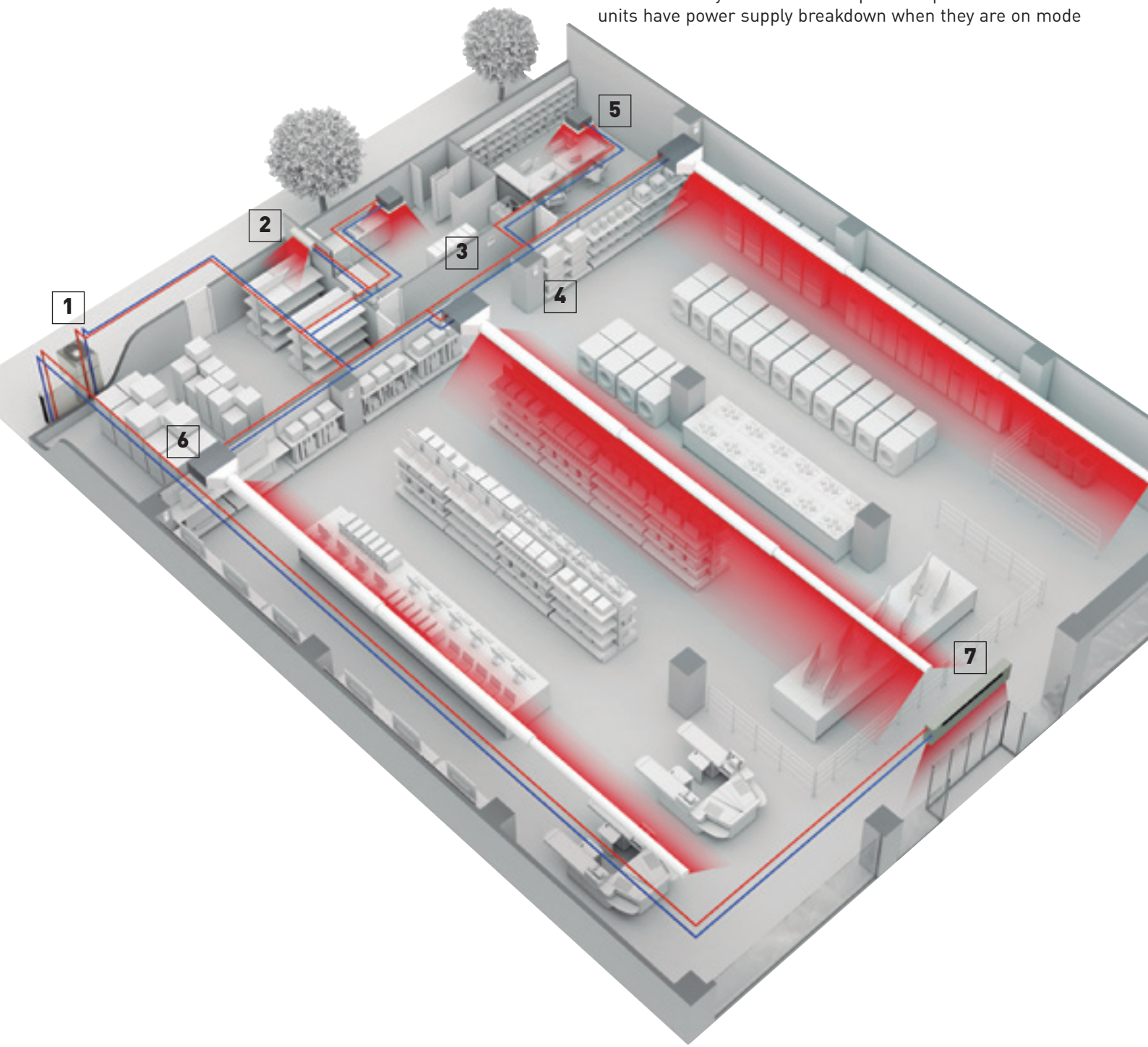

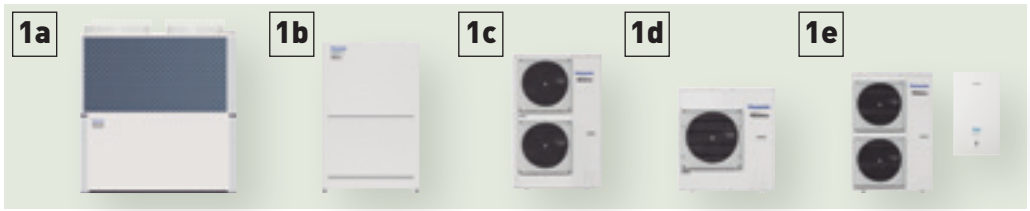

Multi energy solutions, gas or electric.
The Multi energy solution (Gas and Electric) from Panasonic provides the best choice in energy saving and on the flexibility of the installation. Panasonic solutions can be connect to direct expansion systems, water chiller installations and ventilation systems as air handling units.
1a: Gas VRF. ECO G
1b: Electric VRF. ECOi
1c: Electric VRF. Mini ECOi
1d: Electric 1x1. PACi
1e: Electric A2W. Aquarea

TKEA outdoor unit for server room.
Steady cooling, nonstop, even at -20 °C and still with high efficiency. Ready for continuous operation and easy to connect 2 systems to automatically alternate and ensure server rooms are kept cool with maximum operating guaranteed.

Control your way.
Wide variety of controls, from simple user control to full system control via remote access functionality. Touch panel and consumption control.

Econavi Sensor.
The Econavi Sensor detects presence in the room, and quietly adapts the PACi or VRF air conditioning system in order to improve comfort and energy savings.

Wide range of indoor units.
Complete range of indoor units that fits any need. All units provided with supply air temperature sensor and low operation sound level to guarantee guests comfort. From 1,5 kW up to 30,0 kW.

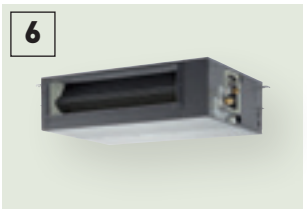

Hide Away, for power and efficiency.
Super silent units deliver the ideal air supply. Units available from 1,5 kW providing precise temperature control even in small rooms. Two models available: slim unit for height restricted areas (MM unit only 200 mm deep), another which allows 100 % fresh air (MF).

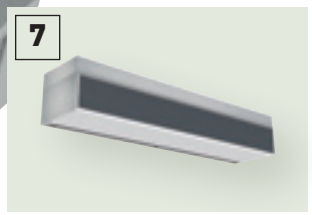

Air Curtain with DX Coil.
The Panasonic range of air curtains is designed for smooth operation and efficient performance.

Protocol friendly.
Great flexibility for integration into your KNX / Modbus / LonWorks / BACnet projects allows fully bi-directional monitoring and control of all the functioning parameters. Range of solutions to control locally or remotely the full system in bi-directional mode.

Air Handling Unit kits for efficient ventilation.
The new AHU kit is specially designed to improve the efficiency of the pre-heating or pre-cooling process of the ventilation.

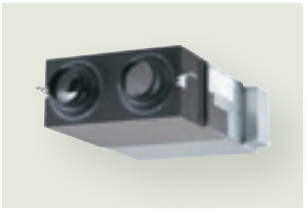

Energy Recovery unit for high efficiency of the system.
Panasonic Energy Recovery Ventilators can reduce the outside air load because they efficiently recover the heat lost by ventilation during the heat recovery process.

Range of VRF outdoor units

Page	Outdoor units	4 HP	5 HP	6 HP	8 HP	10 HP	12 HP
P. 234	Mini ECOi LE2 / LE1 Series	U-4LE2E5 / U-4LE2E8	U-5LE2E5 / U-5LE2E8	U-6LE2E5 / U-6LE2E8	U-8LE1E8	U-10LE1E8	
P. 246	2-Pipe ECOi EX ME2 Series				U-8ME2E8	U-10ME2E8	U-12ME2E8
P. 256	3-Pipe ECOi EX MF3 Series				U-8MF3E8	U-10MF3E8	U-12MF3E8
P. 270	2-Pipe ECO G GE3 Series						
P. 272	3-Pipe ECO G GF3 Series						
P. 274	GHP/EHP Hybrid System						

14 HP	16 HP	18 HP	20 HP	25 HP	30 HP
U-14ME2E8	U-16ME2E8	U-18ME2E8	U-20ME2E8		
U-14MF3E8	U-16MF3E8				
	U-16GE3E5		U-20GE3E5	U-25GE3E5	U-30GE3E5
	U-16GF3E5		U-20GF3E5	U-25GF3E5	
					U-20GES3E5 / U-10MES2E8

Best efficiency ECOi Series from Panasonic

HIGH PERFORMANCE OF PANASONIC'S ECOi SERIES IS VERIFIED BY EUROVENT NOW*!

*DETAILED DATA PAGES 262, 263.

The ECOi Series is designed for energy savings, easy installation, and high efficiency. Always continuing to evolve, Panasonic uses advanced technologies to meet the requirements of diverse situations and contribute to the creation of comfortable living spaces.

Mini ECOi LE Series

The 2-Pipe heat pump small VRF system specifically designed for the European market.

2-Pipe ECOi EX ME2 Series

The VRF system delivering energy-saving performance, powerful operation, reliability and comfort surpassing anything previously possible.

3-Pipe ECOi EX MF3 Series

The VRF system that offers high-efficiency and performance for simultaneous heating and cooling.

Lower running and life cycle costs.
Panasonic ECOi systems are highly efficient VRF systems on the market, offering COPs in excess of 4,0 at full load conditions. The system is also designed to make sure that we reduce the running cost of each system by using our unique road map control routine to ensure that the efficient combination of compressors are running at any one time. Improved defrost sequencing also reduces running costs by defrosting each outdoor coil in turn when conditions allow.
Up to 64 indoor units can be connected up to a capacity of 200 % indexed indoor unit loads, enabling the system to be used effectively on highly diversified building loads: this large connectability feature makes it an easy-to-design solution for schools, hotels, hospitals and other large buildings. Up to 1000 m in pipe length enables the VRF ECOi Series to be used in very large buildings, with maximum design flexibility. The ECOi system is also easy to control. It has more than 8 types of control from standard wired remote controls to touch screen panels or web access interfaces.

DC-inverter control technology for rapid and powerful cooling & heating. The ever-evolving Panasonic ECOi Series.

ECOi Series benefits

Ease of installation.
R410A has a higher operating pressure with a lower pressure loss than previous refrigerants. This enables smaller pipe sizes to be used and allows reduced refrigerant charges.

Simple to design.
Panasonic recognise that designing, selecting and preparing a professional VRF quotation can be a time consuming and costly process, especially as it is often also a speculative exercise. So we have designed proprietary software which is quick and easy to use and produces a full schematic layout of pipework and controls, as well as a full materials list and performance data.

Easy to control.
A wide variety of control options are available to ensure that the ECOi system provides the user with the degree of control that they desire, from simple room controllers through to state of the art BMS controls.

Simple to commission.
Simple set-up procedure including automatic addressing of connected indoor units. Configuration settings can be made from an outdoor unit or via a remote controller.

Easy to position.
The compact design of the ECOi outdoor units means that sizes 4 HP to 10 HP fit into a standard lift and are easy to handle and position when on site. The small footprint and modular appearance of the units ensure a cohesive appearance to an installation.

Wide selection and connectability.
With 17 indoor model styles available, ECOi systems are the ideal choice for multiple small capacity indoor unit installations, with the ability to connect up to 40 indoor units to systems of 24 HP or greater for 3-Pipe ECOi EX MF3 Series.

Easy to maintain.
Each system allows the use of prognostic and diagnostic controls routines, to manage system operation and identifying faults, all designed to reduce the speed of maintenance calls and unit down time.

Lower running and life cycle costs.
Panasonic ECOi system are also designed to make sure that we reduce the running cost of each system by using our unique road map control routine to ensure that the most efficient combination of compressors are running at any one time. Improved defrost sequencing also reduces running costs by defrosting each outdoor coil in turn when conditions allow.

Mini ECOi LE Series for light commercial & residential use

COMPACT DESIGN

Mini ECOi with extraordinary energy-saving performance and high external static pressure (35Pa).

Advantages of Mini ECOi LE Series used for medium sized buildings.

1 Efficiency energy control

Upgraded outdoor units deliver high efficiency rating and reduced energy costs.

2 Space saving

Ideal for commercial locations with limited space such as banks and shops.
Compact units integrate easily and discreetly into building design.

3 Flexible installation

Reduced installation time thanks to compact units and extra long piping without additional refrigeration charge. High external static pressure 35Pa and small chassis increase installation options.

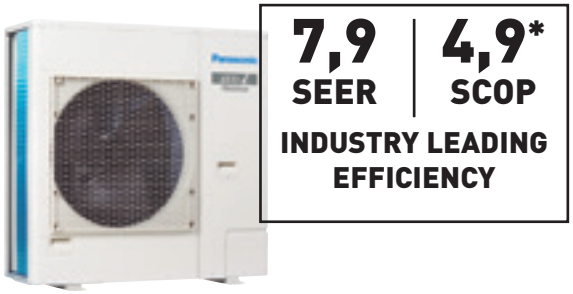

Compact design: LE2 Series - 4 / 5 / 6 HP

- Extraordinary energy saving: 7,9 SEER and 4,9 SCOP (4 HP)*
- 50 m piping length without additional refrigerant charge
- Quiet operation mode with 4 levels
- High COP mode option

* SEER/SCOP is calculated based on the seasonal space cooling/heating efficiency "η" values of the COMMISSION REGULATION (EU) 2016/2281. SEER, SCOP = (η + Correction) × PEF.

LE1 Series - 8 / 10 HP

- 60 % smaller than ECOi ME2 8 / 10 HP with vertical flow type
- Flexible piping length (Total: 300 m, Furthest: 150 m)
- Maximum number of connectable indoor units: 15

Key features for LE2 / LE1.

High external static pressure 35Pa

Full range of ECOi indoor units and controllers

Variable evaporation temperature control as standard

Connectable maximum indoor / outdoor capacity ratio up to 130 %

Auto restart from outdoor units

Demand response (Peak cut) by optional parts

Suitable for R22 renewable projects

Installation flexible, easy and hassle-free

High external static pressure 35Pa

· High air pressure
· New blade shape
· Good for high class condominiums

When unit is installed on a narrow balcony and exposed to the sun, the barrier at the front side would restrict hot air from being discharged. Heat accumulated in an enclosure can cause over-heating. This could potentially result in damage or shorten the product's life span. A high external static pressure sends the air further away from the outdoor unit and through the barrier. This provides better air circulation and distribution.
And a high air pressure of 35Pa discharges the hot air a sufficient distance.

Previous Model - Low Pressure

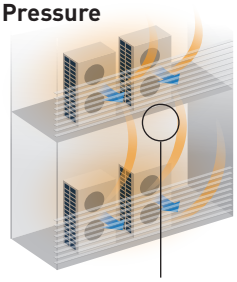

Heat Accumulated.
When the pressure is low, hot air will accumulate in the unit thus affecting its work performance and that of unit above it as well.

Previous fan

LE Series - High Pressure

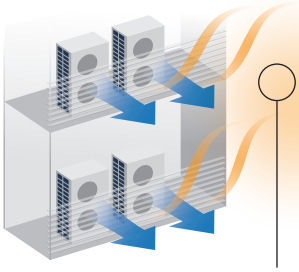

Heat Discharged.
But with a high pressure of 35Pa, hot air is sent further away preventing overheating inside the outdoor unit enclosure.

New LE2's fan

Long piping design length for greater design flexibility

LE1: Maximum total piping length: 300 m.
LE2: Maximum total piping length: 180 m.

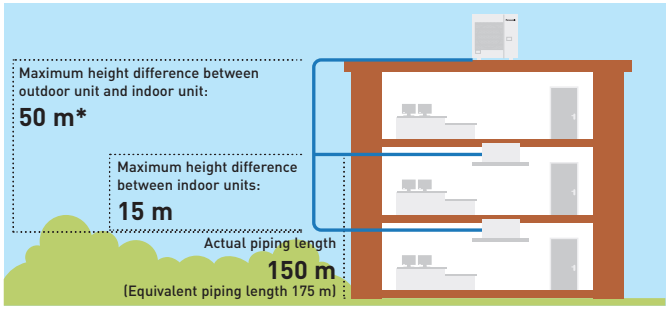

* 40 m if the outdoor unit is below the indoor unit.

Plug & Play concept

FREE OF CHARGE 50 m

· 50 m piping length free of charge
· A 50 m pipe length is sufficient for most residential and small business buildings

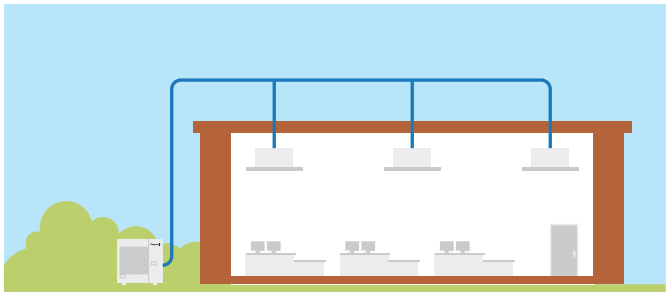

· Compact space-saving design
· High external static pressure 35Pa
· Long piping length for flexible installation
· No refrigeration charge up to 50 m
· 130 % ratio for connectable indoor capacity units

Up to 15 indoor units connectable

An expansion from Panasonic VRF line up, the mini ECOi is compatible with the same indoor units and controls as the rest of the ECOi range.

Compact design

Mini ECOi LE Series is a single unit.
Perfect for installations with limited space and easy to hide within a modern building. Flexible space-saving options compared to single split system.

LE2 short height of 996 mm.
New LE2 Series is 25 % smaller in height than conventional model.

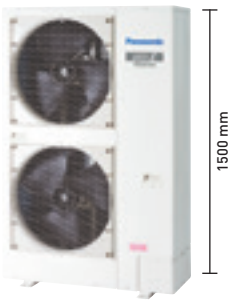

8 and 10 HP LE1

SHORT HEIGHT 996 mm

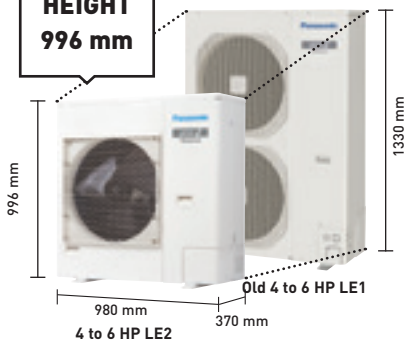

Old 4 to 6 HP LE1
4 to 6 HP LE2

Energy Control & Reliability

The new Mini ECOi system delivering energy-saving performance, powerful operation, reliability and comfort surpassing anything previously possible.

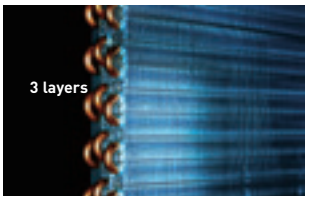

Powerful heat exchanger.
3 layers of heat exchanger for all LE Series. LE Series features the same heat exchange volume as conventional model even though it is 15 % smaller in size.

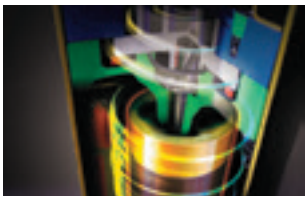

Panasonic twin Rotary Compressor.
A large capacity inverter compressor has been adopted. This new compressor features wider and 0,1Hz step inverter control.

New design fan.
Fan braves have been redesigned to inhibit air resistance and to increase efficiency. The larger fan increases air volume while maintaining low noise levels.

Energy savings design

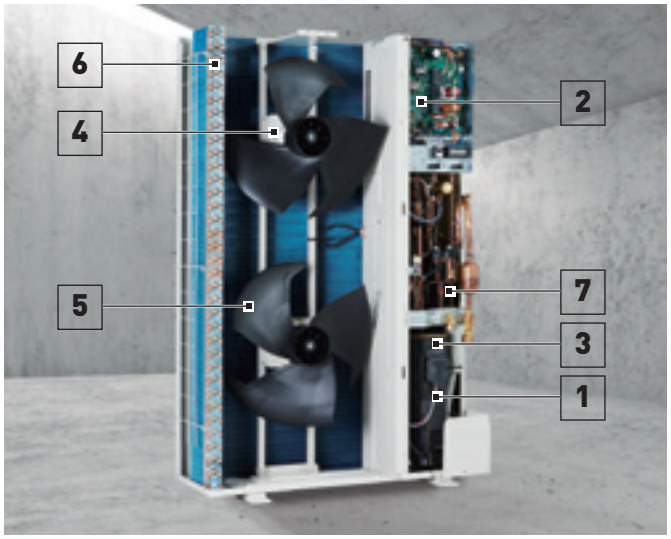

1. **Panasonic Inverter Compressor.** A large-capacity inverter compressor has been adopted. The inverter compressor is superior in performance with improved partial-load capacity.
2. **Printed Circuit Board.** The number of PCB is 2 pieces for making maintenance easier.
3. **Accumulator.** A large accumulator has been adopted to maintain compressor reliability because of the increased refrigerant quantity, which allows an extended maximum piping length.
4. **DC Fan Motor.** Checking load and outside temperature, the DC motor is controlled for optimum air volume.
5. **Newly Designed Fan.** The newly designed fan blades have been developed to inhibit air turbulence and to increase efficiency. As fan diameter has been increased its size, the air volume has been increased whilst maintaining a same sound level.
6. **Heat Exchanger & Copper Tubes.** The heat exchanger size and the copper tube sizes in the heat exchanger have been redesigned to increase efficiency.
7. **Oil Separator.** A centrifugal separator has been adopted to improve oil separation efficiency and reduce refrigerant pressure loss.

Bluefin condenser: High durability outdoor unit

The anti-corrosion Bluefin treatment of the heat exchanger provides greater resistance against corrosion. All models are equipped with Bluefin condenser and corrosion-resistance treated for high resistance to rust and salty air to assure long-lasting performance.

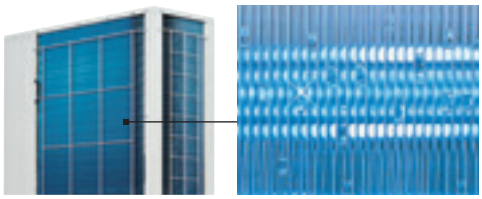

Heat exchanger (Bluefin condenser)

Maximum comfort with quiet operation mode

· Quiet operation mode reduces outdoor unit operating sound by 7dB(A)
· 4-step set point is available
· Silent mode 1 maintains rated cooling capacity

* Timer setting of quiet operation mode is available in High-spec remote controller.

Silent mode options	Sound pressure level
Silent mode 1	-1,5dB(A)
Silent mode 2	-3dB(A)
Silent mode 3	-5dB(A)
Silent mode 4	-7dB(A)

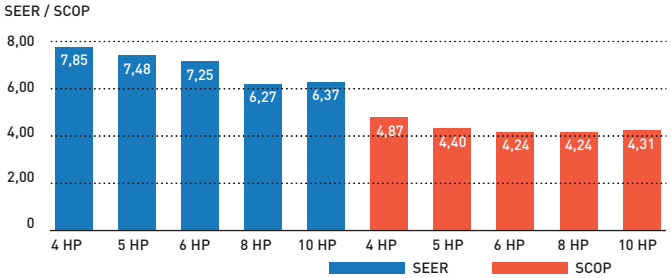

Superior seasonal energy efficiency (SEER/SCOP follows LOT21*)

The operation efficiency has been improved using highly efficient R410A refrigerant, a DC Inverter compressor, DC motor and a heat exchanger design.

* SEER/SCOP is calculated based on the seasonal space cooling/heating efficiency "η" values of the COMMISSION REGULATION (EU) 2016/2281. SEER, SCOP = (η + Correction) × PEF.

Mini ECOi LE2 Series
High Efficiency 4 to 6 HP

Panasonic Mini ECOi. Extraordinary energy-saving. The most compact ECOi system ever.

For light commercial use

Mini ECOi allows easier installation in condominiums and medium sized buildings with limited spaces. Utilising R410A and DC inverter technology, Panasonic offers VRF to a new and growing market.

Short height of 996 m

In addition to raising efficiency, the outdoor unit has been designed to be as compact as possible. It can now be installed in places that were previously too small.

Technical focus

Outstanding SEER and SCOP — Better efficiency even compared to 2 fan outdoor units — 50 m piping length free of refrigeration charge — 35Pa high static pressure — High COP mode selectable with maintenance remote controller — Selectable silent mode

HP			**4 HP**	**5 HP**	**6 HP**	**4 HP**	**5 HP**	**6 HP**
Outdoor units			**U-4LE2E5**	**U-5LE2E5**	**U-6LE2E5**	**U-4LE2E8**	**U-5LE2E8**	**U-6LE2E8**
Power supply	Voltage	V	220/230/240	220/230/240	220/230/240	380/400/415	380/400/415	380/400/415
	Phase		Single Phase	Single Phase	Single Phase	Three Phase	Three Phase	Three Phase
	Frequency	Hz	50	50	50	50	50	50
Cooling capacity		kW	12,1	14,0	15,5	12,1	14,0	15,5
EER [1]		W/W	4,50	4,06	3,73	4,50	4,06	3,73
SEER [2]			**7,9**	**7,5**	**7,3**	**7,9**	**7,5**	**7,3**
Running current cooling		A	13,30/12,70/12,20	16,30/15,60/17,00	20,30/19,40/18,60	4,39/4,17/4,02	5,58/5,30/5,11	6,71/6,37/6,14
Input power cooling		kW	2,69	3,45	4,15	2,69	3,45	4,15
Heating capacity		kW	12,5	16,0	16,5	12,5	16,0	16,5
COP [1]		W/W	5,19	4,60	4,27	5,19	4,60	4,27
SCOP [2]			**4,9**	**4,4**	**4,2**	**4,9**	**4,4**	**4,2**
Running current heating		A	12,20/11,60/11,20	17,60/16,80/16,10	19,10/18,20/17,50	3,98/3,78/3,64	5,62/5,34/5,14	6,24/5,93/5,71
Input power heating		kW	2,41	3,48	3,86	2,41	3,48	3,86
Starting current		A	1,00	1,00	1,00	1,00	1,00	1,00
Maximum current		A	17,30	24,30	27,40	7,90	10,10	10,70
Maximum input power		kW	3,50/3,66/3,82	4,92/5,14/5,37	5,61/5,86/6,12	4,34/5,09/5,28	6,25/6,55/6,82	6,62/6,97/7,23
Maximum number of connectable indoor units [3]			7(10)	8(10)	9(12)	7(10)	8(10)	9(12)
External static pressure		Pa	0~35	0~35	0~35	0~35	0~35	0~35
Air volume		m^3/min	69	72	74	69	72	74
Sound pressure	Cool	dB(A)	52	53	54	52	53	53
	Cool (Silent 1/2/3/4)	dB(A)	50,5/49/47/45	51,5/50/48/46	52,5/51/48/46	50,5/49/49/47	48,5/50/48/46	48,5/50/48/46
	Heat	dB(A)	54	56	56	54	56	56
Sound power	Cool / Heat	dB	69/72	71/75	73/75	69/72	71/75	73/75
Dimension	H x W x D	mm	996 x 980 x 370	996 x 980 x 370	996 x 980 x 370	996 x 980 x 370	996 x 980 x 370	996 x 980 x 370
Net weight		kg	106	106	106	106	106	106
Piping connections	Liquid pipe	Inch (mm)	3/8 (9,52)	3/8 (9,52)	3/8 (9,52)	3/8 (9,52)	3/8 (9,52)	3/8 (9,52)
	Gas pipe	Inch (mm)	5/8 (15,88)	5/8 (15,88)	5/8 (15,88)	5/8 (15,88)	5/8 (15,88)	5/8 (15,88)
Maximum piping length (total)		m	150 (180)	150 (180)	150 (180)	150 (180)	150 (180)	150 (180)
Elevation difference (in/out)		m	50 (Outdoor unit upper) / 40 (Outdoor unit lower)	50 (Outdoor unit upper) / 40 (Outdoor unit lower)	50 (Outdoor unit upper) / 40 (Outdoor unit lower)	50 (Outdoor unit upper) / 40 (Outdoor unit lower)	50 (Outdoor unit upper) / 40 (Outdoor unit lower)	50 (Outdoor unit upper) / 40 (Outdoor unit lower)
Refrigerant (R410A) / CO_2 Eq.		kg / T	6,70 (14,40) / 13,9896	6,70 (14,40) / 13,9896	6,70 (14,40) / 13,9896	6,70 (14,40) / 13,9896	6,70 (14,40) / 13,9896	6,70 (14,40) / 13,9896
Maximum allowable indoor / outdoor capacity ratio		%	50~130	50~130	50~130	50~130	50~130	50~130
Operating range	Cool Min ~ Max	°C	-10~+46	-10~+46	-10~+46	-10~+46	-10~+46	-10~+46
	Heat Min ~ Max	°C	-20~+18	-20~+18	-20~+18	-20~+18	-20~+18	-20~+18

1) EER and COP calculation is based in accordance to EN14511. 2) SEER/SCOP is calculated based on the seasonal space cooling/heating efficiency "η" values of the COMMISSION REGULATION (EU) 2016/2281. SEER, SCOP = (η + Correction) × PEF. 3) In case of 1,5 kW indoor unit's connection, able to connect maximum 12 indoor units.

INVERTER+ | R2 ROTARY COMPRESSOR | BLUEFIN | -10°C COOLING MODE | -20°C HEATING MODE | AUTOMATIC RESTART | R22 → R410A R22 RENEWAL | PANASONIC AC SMART CLOUD | OPTIONAL WLAN | 5 YEARS COMPRESSOR WARRANTY

INTERNET CONTROL: Optional.

EUROVENT CERTIFIED PERFORMANCE www.eurovent-certification.com

Mini ECOi LE1 Series
High Efficiency 8 and 10 HP

Prepare to be blown away by Panasonic's New Mini VRF system. The Mini VRF compact system is the ideal solution for minimum outdoor space. Panasonic extends the Mini VRF range by 8 and 10 HP units.

Increase external static pressure

When unit is installed on a narrow balcony, the fence at front side will be the obstacle. High external static pressure will overcome this obstacle and maintain operation capacity.

High ambient temperature performance

Cooling operation range up to 46 °C. The system can maintain the rated (100 %) capacity up to 40 °C by 8 HP model & up to 37 °C by 10 HP model.

Technical focus

Piping flexibility with 150 m maximum length — High efficiency — 15 indoor units connectable — Quiet operation mode (one of the lowest in the market) — High ambient temp performance — High static pressure 35Pa

HP			**8 HP**	**10 HP**
Outdoor units			**U-8LE1E8**	**U-10LE1E8**
Power supply	Voltage	V	380/400/415	380/400/415
	Phase		Three Phase	Three Phase
	Frequency	Hz	50	50
Cooling capacity		kW	22,4	28,0
EER [1]		W/W	3,80	3,11
SEER [2]			**6,3**	**6,4**
Running current cooling		A	9,60/9,15/8,80	14,70/14,00/13,50
Input power cooling		kW	5,89	9,00
Heating capacity		kW	25,0	28,0
COP [1]		W/W	4,02	3,93
SCOP [2]			**4,2**	**4,3**
Running current heating		A	10,20/9,65/9,30	11,60/11,10/10,70
Input power heating		kW	6,22	7,13
Starting current		A	1,00	1,00
Maximum current		A	13,70	19,60
Maximum input power		kW	9,16	13,10
Maximum number of connectable indoor units [3]			15	15
External static pressure		Pa	0~35	0~35
Air volume		m^3/min	150	160
Sound pressure	Cool	dB(A)	60	63
	Cool (Silent 1/2/3/4)	dB(A)	57/55/53	60/58/56
	Heat	dB(A)	64	65
Sound power	Cool / Heat	dB	81/85	84/86
Dimension	H x W x D	mm	1500 x 980 x 370	1500 x 980 x 370
Net weight		kg	132	133
Piping connections	Liquid pipe	Inch (mm)	3/8 (9,52) [4] / 1/2 (12,70) [5]	3/8 (9,52) [4] / 1/2 (12,70) [5]
	Gas pipe	Inch (mm)	3/4 (19,05) [4] / 7/8 (22,22) [5]	7/8 (22,22) [4] / 1 (25,40) [5]
Maximum piping length (total)		m	7,5~150 (7,5~300)	7,5~150 (7,5~300)
Elevation difference (in/out)		m	50 (Outdoor unit upper) / 40 (Outdoor unit lower)	50 (Outdoor unit upper) / 40 (Outdoor unit lower)
Refrigerant (R410A) / CO_2 Eq.		kg / T	6,30 (24,00) / 13,1544	6,60 (24,00) / 13,7808
Maximum allowable indoor / outdoor capacity ratio		%	50~130	50~130
Operating range	Cool Min ~ Max	°C	-10~+46	-10~+46
	Heat Min ~ Max	°C	-20~+18	-20~+18

1) EER and COP calculation is based in accordance to EN14511. 2) SEER/SCOP is calculated based on the seasonal space cooling/heating efficiency "η" values of the COMMISSION REGULATION (EU) 2016/2281. SEER, SCOP = (η + Correction) × PEF. 3) If the heating utilized, it is necessary to increase 1 size with respect to the main liquid pipe, depending on the combination of the indoor unit. 4) Under 90 m for ultimate indoor unit. 5) Over 90 m for ultimate indoor unit. If the longest piping equivalent length exceeds 90 m, increase the sizes of the main tubes by 1 rank for gas and liquid pipes.

INVERTER+ | R2 ROTARY COMPRESSOR | BLUEFIN | -10°C COOLING MODE | -20°C HEATING MODE | AUTOMATIC RESTART | R22 → R410A R22 RENEWAL | PANASONIC AC SMART CLOUD | OPTIONAL WLAN | 5 YEARS COMPRESSOR WARRANTY

INTERNET CONTROL: Optional.

EUROVENT CERTIFIED PERFORMANCE www.eurovent-certification.com

Rating Conditions: Cooling Indoor 27 °C DB / 19 °C WB. Cooling Outdoor 35 °C DB / 24 °C WB. Heating Indoor 20 °C DB. Heating Outdoor 7 °C DB / 6 °C WB. (DB: Dry Bulb; WB: Wet Bulb).
Specifications subject to change without notice. For detailed information about ErP / Energy Labelling, please visit our websites www.aircon.panasonic.eu or www.ptc.panasonic.eu.

ECOi EX
The Game Changer

VRF with outstanding energy-saving performance and powerful operation SEER 7,56 (2-Pipe 18 HP model).

A game-changing VRF system delivering energy-saving performance, powerful operation, reliability and comfort surpassing anything previously possible.

It represents a true paradigm shift in air conditioning solutions. Taking quality to the extreme — that's the Panasonic challenge.

1 High performance at extreme conditions

ECOi EX is highly reliable, with strong cooling & heating power, even when operating at extreme ambient temperatures. The units can operate at 100 % of capacity at 43 °C, reaching a great cooling operation up to 52 °C and in heating -25 °C*.
Also, the ECOi EX features include Bluefin in newly designed heat exchanger improving efficiency as well in marine ambient. A silicone coated PCB (Printed Circuit Board) protects the unit from being damaged by environmental factors such as moisture and dust.

2 Outstanding efficiency and comfort

The new ECOi EX system is designed to increase energy efficiency by delivering high SEER rating, as well as high efficiency for part-load operations.
The system has reduced energy costs thanks to "All-Inverter Compressors", with independent control to deliver highly flexible performance. Also, the ECOi EX features an enlarged heat exchanger with triple surfaces that allow for improved heat transfer and a newly designed curved air discharge bell-mouth for better aerodynamics. The three-stage oil recovery design makes it able to minimise the frequency of forced oil recovery, leading to reduced energy costs and sustained comfort.

3 Superior flexibility

With its up to 1000* meters of pipeline, its maximum 30 meters height difference between indoor units and maximum 90 meters between outdoor unit and indoor unit, the design possibilities have grown exponentially making the new ECOi EX the ideal air conditioning option for expansive buildings, such as train stations, airports, schools or hospitals. These advantages are enhanced with the wide range of indoor unit models and capacities facilitating the perfect adaptation to all kind of projects. The careful selection of controls and peripherals such as the Pump Down, the AHU and/or the chiller, enables an optimum system use.
Maximum allowable indoor / outdoor connected capacity ratio of up to 200 %*.

* Conditions of 2-Pipe ECOi EX ME2 Series.

TOP Efficiency and Comfort

Remarkable improvement on key components: extraordinary energy-saving performance and redesigned for smooth and better air discharge.

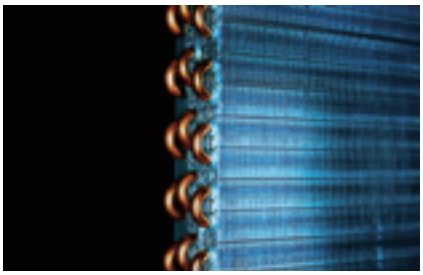

Enlarged heat exchanger surface area with triple surface.

* For 8 & 10 HP unit, the heat exchanger is 2 row design.

Multiple large-capacity all inverter compressors (more than 14 HP).

Newly designed curved air discharge bell mouth for better aerodynamics.

Improvements on refrigerant circuit

Compressor.
Redesigned components in the body provide performance improvement especially in the rated cooling condition and AEER performance.

Accumulator.
New oil returning circuit with control valve makes efficient oil recovery to compressor.

Oil separator.
Modified tank design makes efficient oil separation with less pressure drop.

Receiver tank less design
Improved refrigerant control program recovers the remaining refrigerant gas in the system back to the accumulator tank effectively.

Smooth exhaust flow by new bell-mouth

The new curved shape with integrated top and bottom assure smooth exhaust flow.
This gives more air-volume with same sound level, less input power at same air volume.

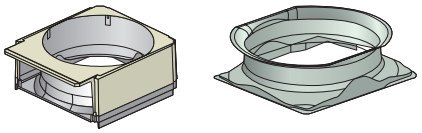

Conventional model (ME1) New model (ME2)

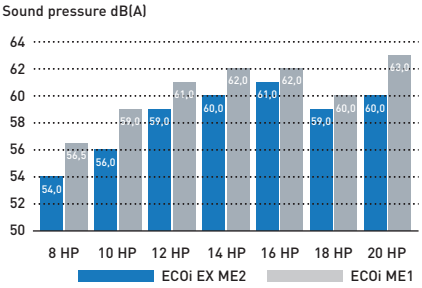

Combined 3 surface heat exchanger

The highly efficient piping pattern increases heat exchange performance by 5 %.
The new heat exchanger features a 3 surface construction.
Compared to the divided dual-surface construction in current models, there is no divided space and the face area of heat exchanger becomes larger.

Conventional model (ME1) New model (ME2)

Oil Recovery Intelligent Control

Intelligent 3-stage Oil Management System

In a VRF system, where lengthy piping and a large number of indoor units need to be controlled collectively, the key to maintaining the system's reliability is to ensure an appropriate amount of oil is secured in the compressors. In order to avoid oil shortage in the compressor, maximum operation is normally forcibly conducted at regular intervals to recover oil from indoor units. This method, typically employed in a standard VRF, causes the system to overheat or overcool and thus waste energy.
In Panasonic VRF systems, a sensor for detecting oil levels is mounted in each compressor. In installations with multiple outdoor units, a shortage of oil in one compressor can be compensated for by recovering oil either from another compressor in the same unit, from a compressor in an adjacent outdoor unit, or from a connected indoor unit. Panasonic VRF systems provide users with a comfortable environment whilst saving energy.

Oil recovery intelligent control advantages:

1. Higher efficiency
2. Durability
3. Comfort:
   - Continuous operation
   - Low noise
   - Low vibration

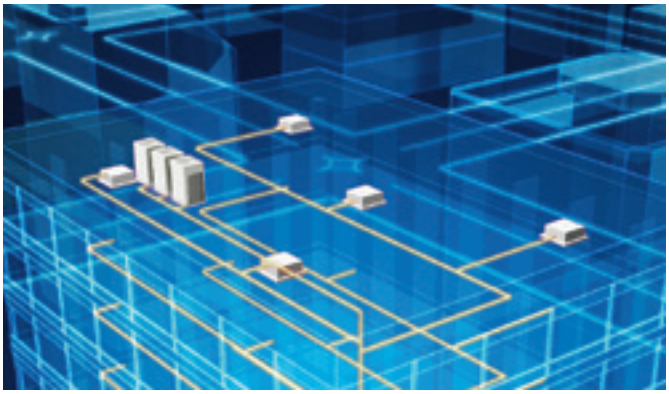

The Panasonic system efficiently manages oil recovery in three stages; minimising the frequency of forced oil recovery while reducing energy cost and maintaining comfort.

STAGE-1: Panasonic compressors are equipped with sensors which monitor oil levels precisely at all times. If oil levels fall, oil can be transferred from other compressors within the same outdoor unit.
STAGE-2: If oil levels in all compressors within the outdoor unit fall, oil can be replenished from adjacent outdoor units.
STAGE-3: Forced oil recovery is implemented only if oil levels become insufficient in spite of above measures. The Panasonic system's design concept is radically different from conventional oil systems.

Features of oil recovery design

Oil sensors installed in each compressor.
Oil sensors installed in each Panasonic compressor precisely monitor oil levels, eliminating unnecessary oil recovery.

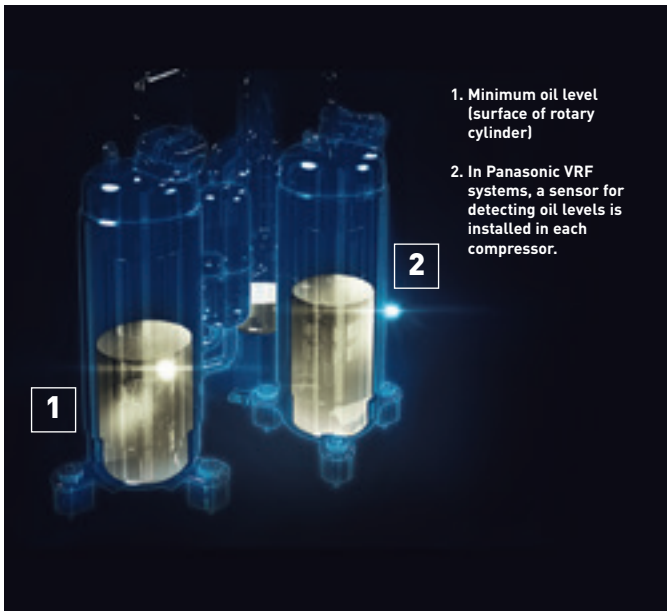

Highly functional oil separator.
Thanks to extended separate piping, oil recovery efficiency reaches 90 %, minimising the oil to be discharged from the compressor.

Twin Rotary Inverter Compressor

New twin rotary inverter compressor

Two independently controlled inverter compressors achieve high efficiency. Redesigned components in the body provide performance improvement especially in the rated cooling condition and EER performance.

· Wider and flexible control on Inverter compressor
· Better oil lubrication
· Smooth start up

Extraordinary energy-saving performance

Designed for Actual Operation Performance. Panasonic builds air conditioning systems not only with a high EER for rated operation, but also with Seasonal-EER appropriate to the customer's actual environment of use. For instance, with rated operation, outdoor temperature is constant at 35 °C, but in reality the outdoor temperature is continuously changing. Consequently, required air conditioning performance also changes. That's why Panasonic implements the following kind of proprietary control.

1. Set temperature is rapidly attained; full-load operating time is kept to a minimum.
2. The frequency of forced oil recovery is minimised. The volume of oil within the compressors is monitored precisely by sensors, so forced oil recovery under full-load operation is conducted only when necessary. Since this suppresses noise due to oil recovery, comfort is maintained.
3. Panasonic pursues a high EER, of course, as well as high EER in part load, for energy saving performance under a broad range of loads.

Panasonic's design concept contributes to substantial energy cost reductions.

Compressor efficiency electric system VRF.

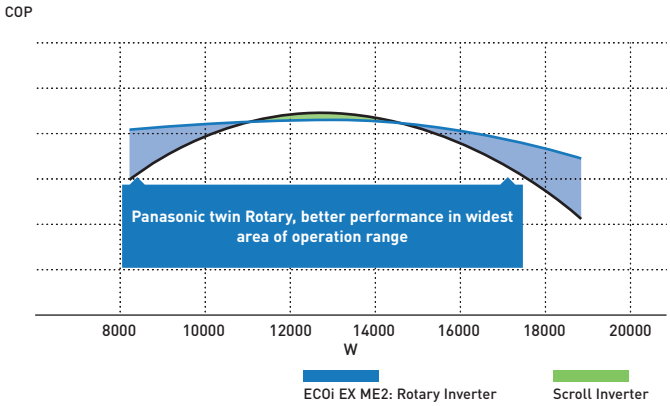

Number of Inverter compressors.

	2-Pipe ECOi EX ME2							3-Pipe ECOi EX MF3				
Size	**Small**		**Medium**			**Large**		**Medium**				
HP	8	10	12	14	16	18	20	8	10	12	14	16
Number	1 pc.		1 pc.	2 pcs.		2 pcs.		1 pc.			2 pcs.	

Actual operation data graph of Panasonic VRF

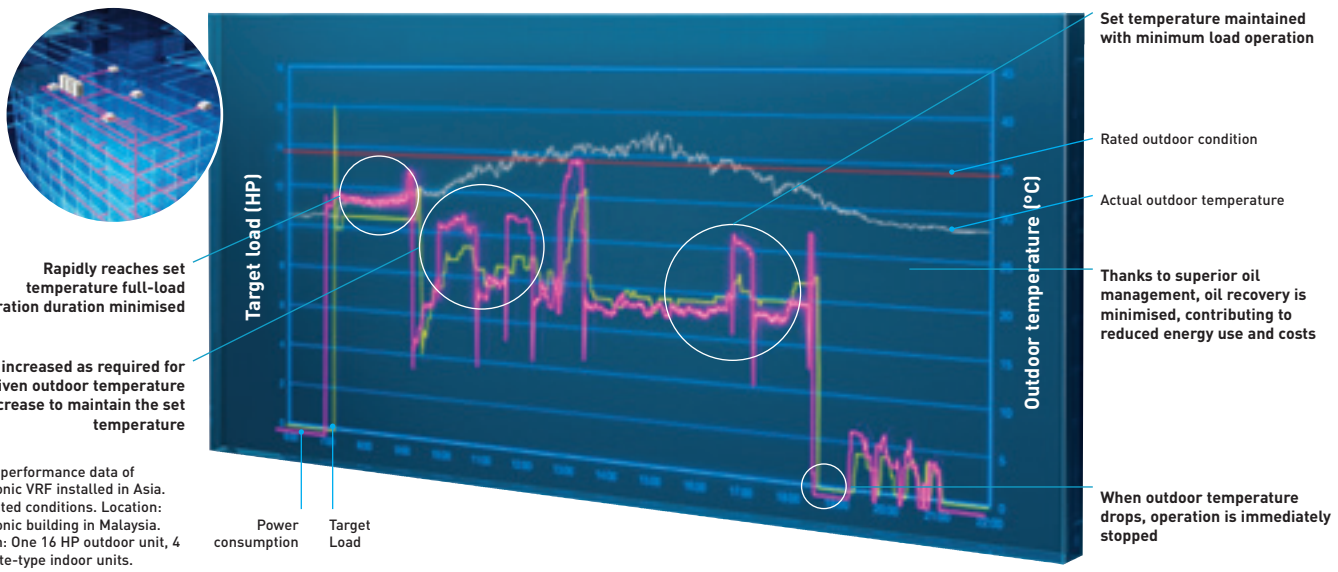

Actual performance data of Panasonic VRF installed in Asia. Simulated conditions. Location: Panasonic building in Malaysia. System: One 16 HP outdoor unit, 4 Cassette-type indoor units.

Superior Quality, Reliability and Durability

High safety operation in case of breakdown!

Automatic Back-Up operation. Ensures heating and cooling.
It is possible for the system to keep working, even if the compressors, fan motor and the temperature sensor are damaged (even when a compressor fails in single unit with 2 compressors inside).

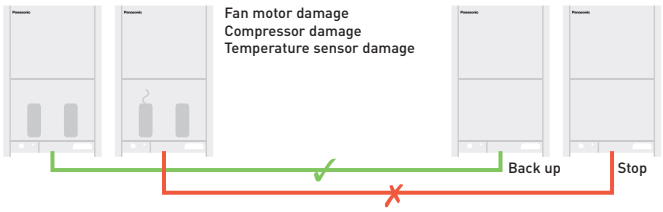

The system will still operate up to 25 % of the connected indoor units.
System will not stop when up to 25 % of indoor units have power supply breakdown when they are ON Mode.

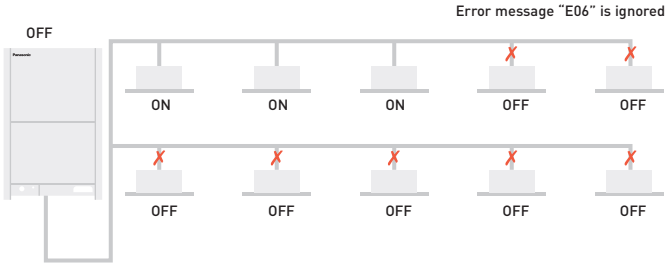

Hi-durability outdoor unit

Treated for high resistance to corrosion (rust and salty air) to ensure long-lasting performance.

Note: Selecting this unit does not completely eliminate the possibility of rust developing. For details concerning unit installation and maintenance, please consult an authorised dealer.

Specially protected parts.

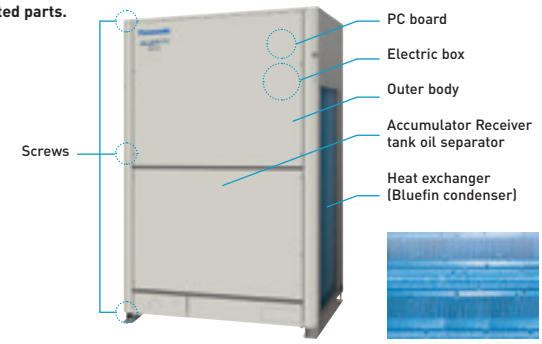

Extended compressor life by uniform compressor operation time

The total run-time of compressors are monitored by a built-in microcomputer, which ensures that operation times of all compressors within the same refrigerant circuit are balanced.
Compressors with histories showing shorter run times are selected first, ensuring equal wear and tear across all units and extending the working life of the system.

System example.
A,C: DC inverter compressor
B,D: Constant speed compressor

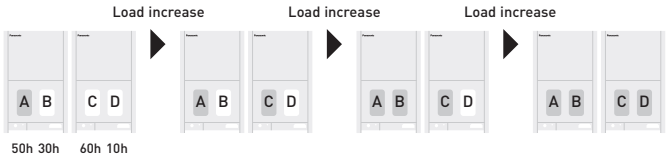

* Depend on accumulated operation time of each compressors.
* Compressor priority has possibility to be changed.
(e.g) Case 1: A→C→B→D, Case 2: C→A→D→B, Case 3: A→C→D→B, Case 4: C→A→B→D
* Also other cases available.

A large number of indoor unit models can be connected

2-Pipe ECOi EX ME2 Series extraordinary partial load and SEER/SCOP

Efficiency in VRF systems

The only way to compare so far, was the nominal efficiency at outdoor ambient temperature of 35 °C (EER) in Cooling and at 7 °C in heating (COP). With new EN-14825 seasonal efficiency will be shown, the result will be SEER and SCOP. New ECOi EX is reaching excellent performance without using any additional saving functions.

The highest EER/COP rating in most capacities

Compared to conventional model ECOi (ME1)

The ECOi EX marks a revolutionary step forward in VRF efficiency. A look at the incredible EER/COP value clearly indicates that. What's more, this high EER/COP value is achieved even during part load operation. This shows the extraordinary energy-saving performance the ECOi EX is capable of providing.

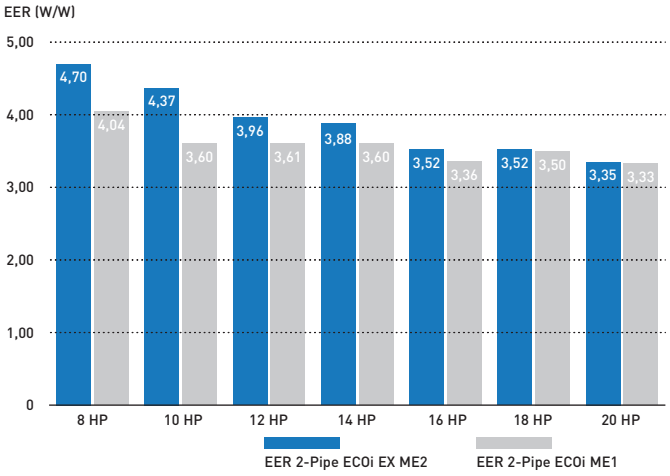

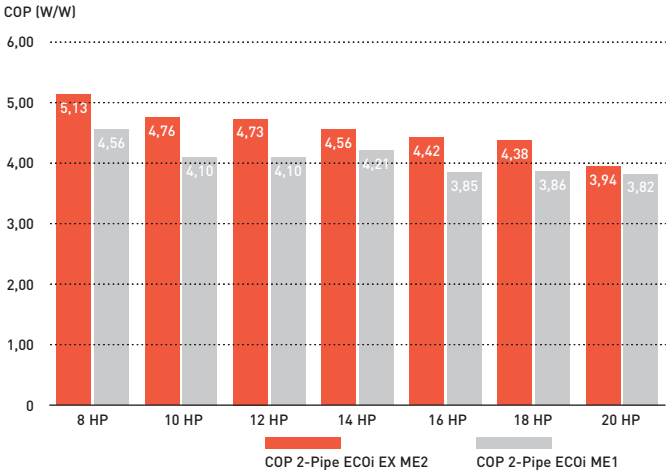

Partial load for seasonal and real system efficiency

VRF units are designed to adapt to the heating and cooling demand, adapting its performance to different outdoor conditions. When compressor runs at lower than 100 % capacity, the system is working at partial load. A wider compressor operating range results in better system performance both at full load and partial load conditions. Panasonic ECOi EX partial load is excellent, reaching a minimum of 15 % of compressor capacity.

Excellent efficiency at any condition and partial load

In both heating and cooling mode, Panasonic ECOi EX is reaching exceptional levels of efficiency.

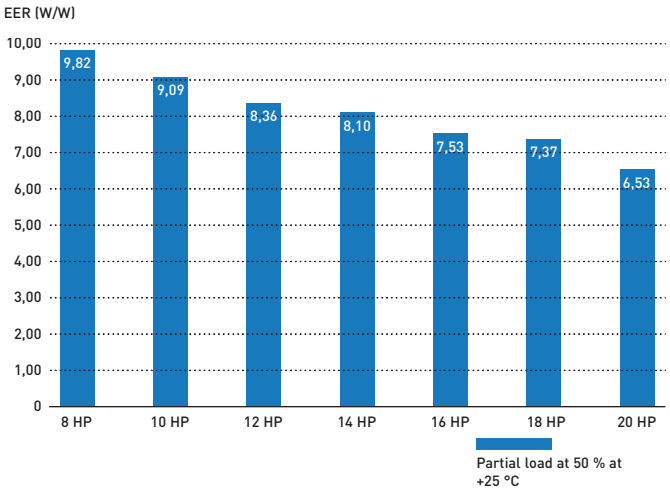

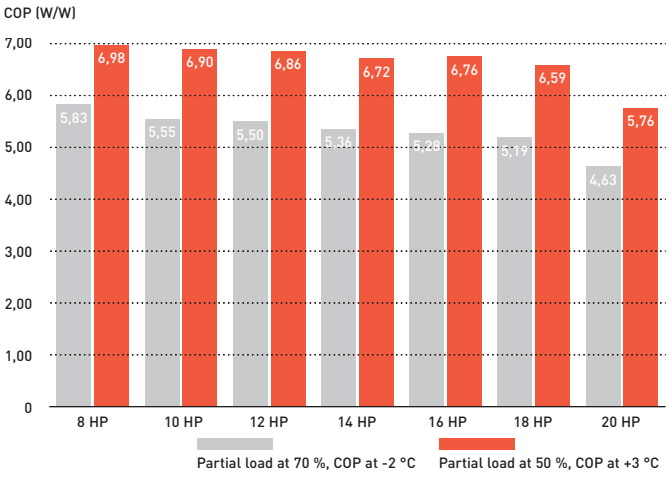

SEER and SCOP following to EN-14825

When better partial load, better efficiency is achieved in real operation. New EN-14825 is showing the way to calculate considering full year operation hours at different conditions. New Panasonic ECOi EX is designed to save energy in any partial load conditions. Most of operation hours system is under partial load conditions, 80 % of total operation hours is less than 70 % of full load.
In below graphs is the example for average ambient conditions, this uses Strasbourg ambient conditions for calculation.

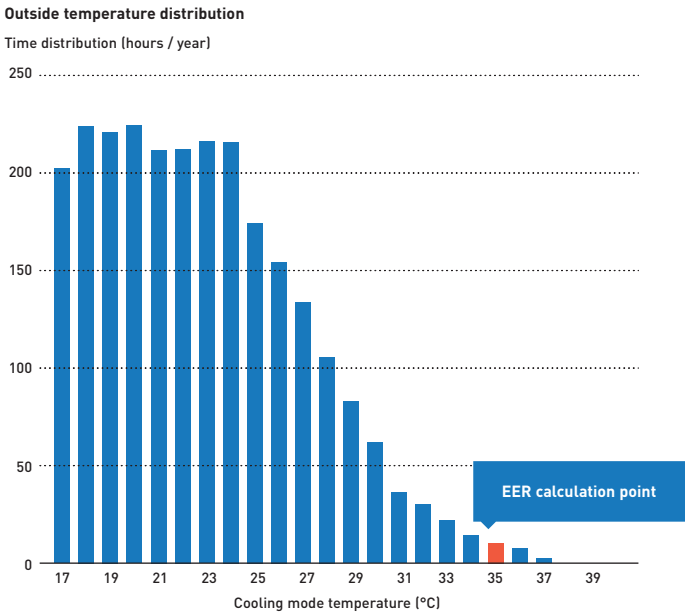

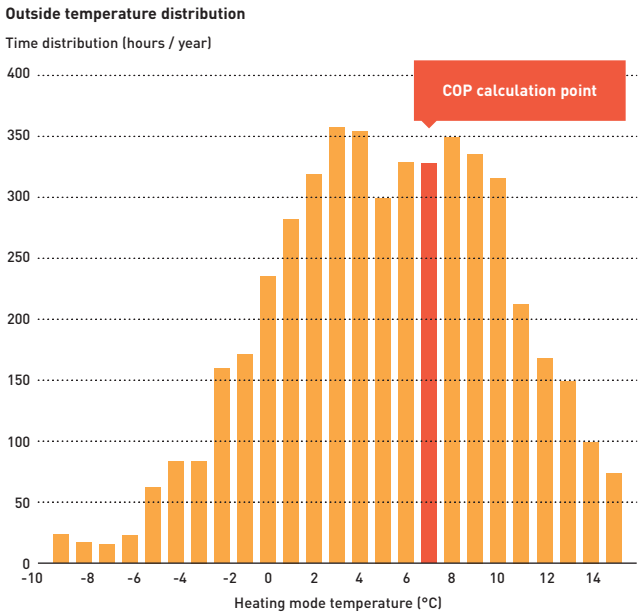

In the characteristics EER and COP only a single temperature for the assessment of the efficiency is taken as a basis in each case. Data calculated under EN-14825 conditions, not additional saving function considered for this calculation.
Compressor frequency according to ambient temperature and building design.

SEER and SCOP values

ECOi EX models have superior seasonal space cooling/ heating efficiency following not only EN 14825 but also COMMISSION REGULATION (EU) 2016/2281. This regulation requires to use "η" values in the technical documents from January 2018.

Please visit our websites www.aircon.panasonic.eu or www.ptc.panasonic.eu.

However, if it was necessary by setting on commissioning Panasonic, can increase efficiency additionally by "20 %" increasing evaporation refrigerant temperature range, for a higher efficiency and lower energy consumption.

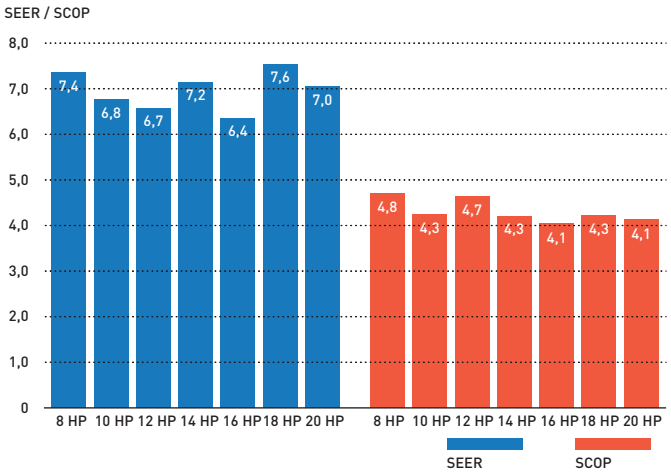

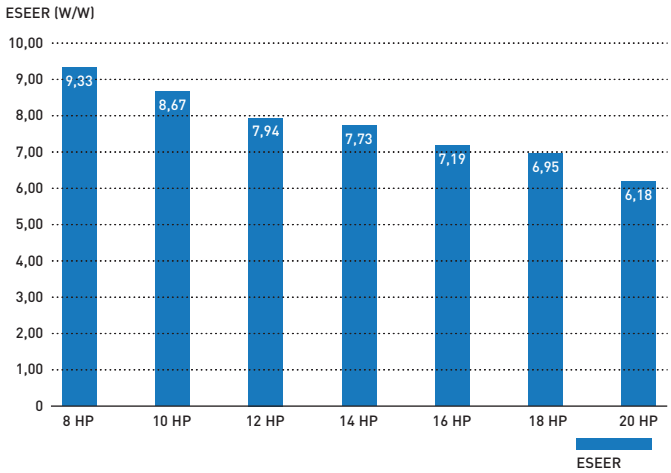

2-Pipe ECOi EX ME2 Series High Performance at Extreme Conditions

The ECOi EX can still operate at 100 % capacity when the outside temperature is as high as 43 °C. This high power capability enables reliable operation even under extremely high temperature conditions.

Extremely high capacity at -20 °C and unique heating capacity at -25 °C

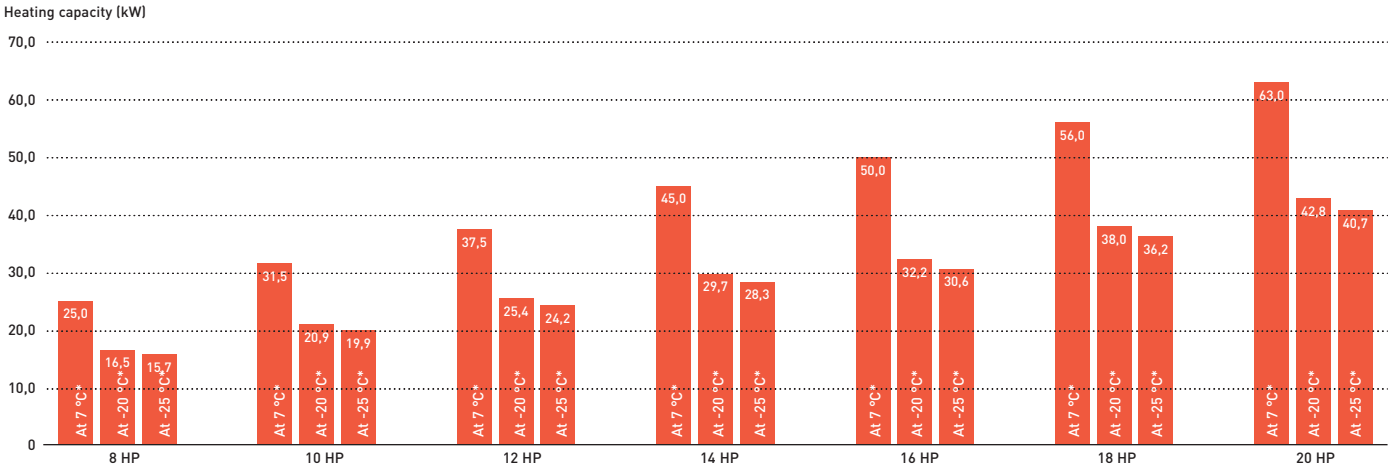

* Outdoor air temperature (°C WB).

Trusted reliability even under high and low temperature conditions

Designed to be durable enough to withstand extreme heat, 2-Pipe ECOi EX ME2 Series ensures reliable cooling operation over an extended operation range up to 52 °C, and heating operation also at minus -25 °C.

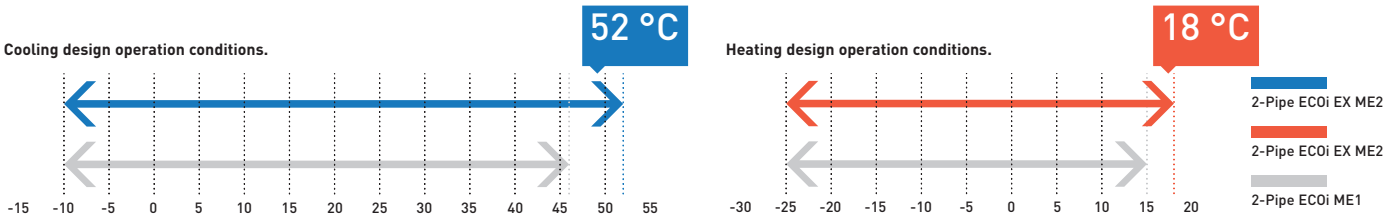

Cooling: Outside air temperature ˚C (DB). Heating: Outside air temperature ˚C (WB).

2-Pipe ECOi EX ME2 Series
Superior Flexibility

Connectable maximum allowable indoor / outdoor capacity ratio up to 200 %*

ECOi EX attain maximum indoor unit connection capacity of up to 130 % of the unit's connection range. This limit can be overpassed and reach up to 200 % if some conditions are satisfied. With this feature, ECOi EX provides an ideal air conditioning solution for locations where full cooling/heating are not always required in all spaces at same time.

System (HP)	8	10	12	14	16	18	20	22	24	26	28	30	32	34	36	38	40	42	44	46	48	50	52	54	56	58	60	62	64	66	68	70	72	74	76	78	80
Connectable indoor units: 130 %	13	16	19	23	26	29	33	36	40	43	46	50	53	56	59	64																					
Connectable indoor units: 200 %	20	25	30	35	40	45	50	55	60	64																											

Note: If more than 100 % indoor units are operated with a high load, the units may not perform at the rated capacity. For the details, please consult with an authorised Panasonic dealer. * If the following conditions are satisfied, the effective range is above 130 % up to 200 %. Obey the limited number of connectable indoor units. The lower limit of operating range for heating outdoor temperature is limited to -10 °C WB (standard -25 °C WB). Simultaneous operation is limited to less than 130 % of connectable indoor units. 1,5 kW capacity of Indoor Units are included.

Increased piping lengths and design flexibility

Adaptable to various building types and sizes. Actual piping length: 200 m. Maximum piping length: 1.000 m.

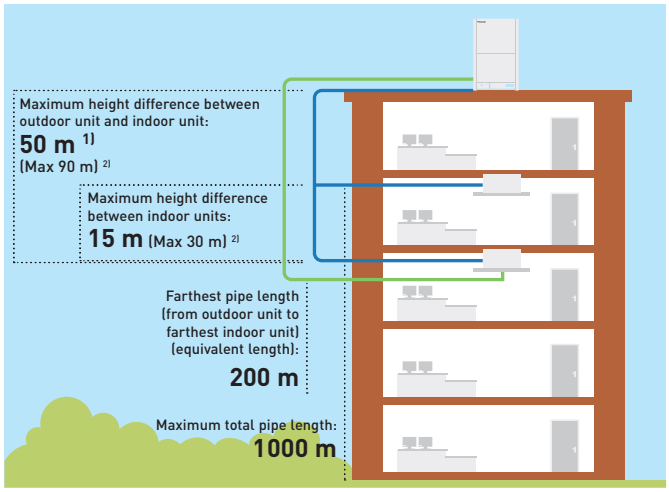

1) 40 m if the outdoor unit is below the indoor unit.
2) Setting change is necessary. Please contact an authorized Panasonic dealer in the case of conditions below:
50 < Height difference between OU and IU ≤ 90 or 15 < Height difference between IUs ≤ 30.

Up to 50 m length difference between the longest and the shortest piping from the first branch

Flexible piping layout makes it easier to design systems for locations such as train stations, airports, schools and hospitals.

- Up to 64 units can be connected to one system
- Difference between maximum and minimum pipe runs after first branch can be a maximum of 50 m
- Larger pipe runs can be up to 200 m

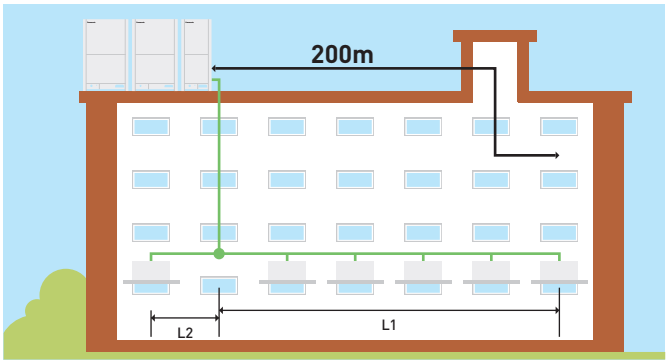

L1 = Longest pipe run. L2 = Shortest pipe run. L1 - L2 = Maximum 50 m.

Compact design

The ME2 Series has reduced the installation space required with up to 20 HP available in a single chassis. 8 - 10 HP are able to fit inside a lift for easy handling on site.

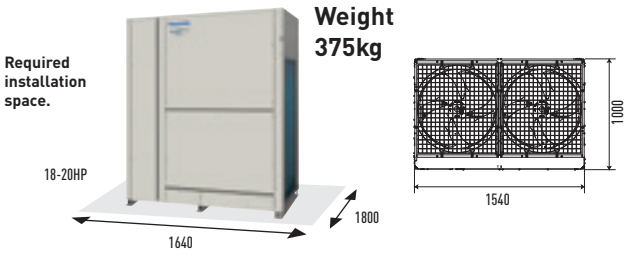

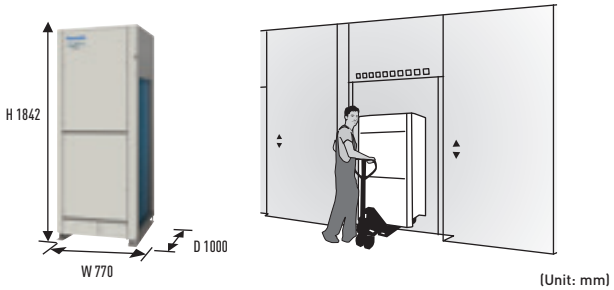

(Unit: mm)

2-Pipe ECOi EX ME2 Series
Piping Design

Select installation locations so that the lengths and sizes of refrigerant piping are within the allowable ranges shown in the figure below.

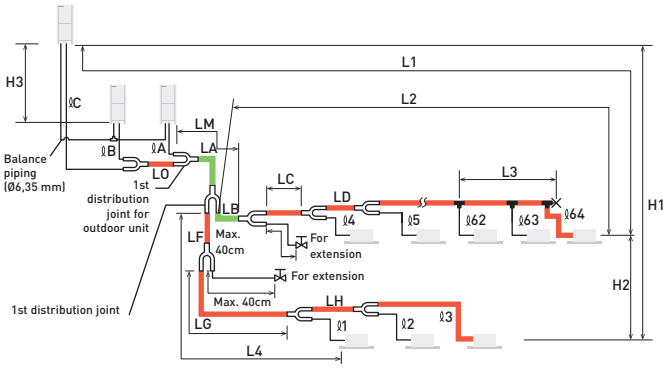

Main piping length (maximum piping size) LM= LA + LB ...

Main distribution tubes LC – LH are selected according to the capacity after the distribution joint.

Sizes of indoor unit connection piping ℓ1 – ℓ64 are determined by the connection piping sizes on the indoor units.

Distribution joint (CZ: optional parts).

T-joint (field supply).

Ball valve (field supply).

Solidly welded shut (pinch weld).

The outdoor connection main piping (LO portion) is determined by the total capacity of the outdoor units that are connected to the tube ends.
Note: Be sure to use special R410A distribution joints (CZ: optional parts) for outdoor unit connections and piping branches.

R410A distribution joint.
CZ-P680PH2BM (for outdoor unit)
CZ-P1350PH2BM (for outdoor unit)
CZ-P160BK2BM (for indoor unit)
CZ-P680BK2BM (for indoor unit)
CZ-P1350BK2BM (for indoor unit)

Ranges that apply to refrigerant piping lengths and to differences in installation heights

Items	Mark	Contents		Length (m)
Allowable piping length	L1	Maximum piping length	Actual length	≤200[1]
			Equivalent length	≤210[1]
	Δ L (L2-L4)	Difference between maximum length and minimum length from the 1st distribution joint		≤50[2]
	LM	Maximum length of main piping (at maximum size) *** Even after 1st distribution joint, LM is allowed if at maximum piping length.**		—[3]
	ℓ1, ℓ2~ ℓ64	Maximum length of each distribution tube		≤50[4]
	L1+ ℓ1+ ℓ2~ ℓ63+ ℓA+ℓB+LF+LG+LH	Total maximum piping length including length of each distribution tube (only liquid piping)		≤1000
	ℓA, ℓB+LO, ℓC+LO	Maximum piping length from outdoor's 1st distribution joint to each outdoor unit		≤10
Allowable elevation difference	H1	When outdoor unit is installed higher than indoor unit		≤50
		When outdoor unit is installed lower than indoor unit		≤40
	H2	Maximum difference between indoor units		≤15
	H3	Maximum difference between outdoor units		≤4
Allowable length of joint piping	L3	T-joint piping (field-supply); Maximum piping length between the first T-joint and solidly welded-shut end point		≤2

L = Length, H = Height

1) If the longest piping length (L1) exceeds 90 m (equivalent length), increase the sizes of the main tubes (LM) by 1 rank for gas tubes and liquid tubes. Use a field supply reducer. Select the tube size from the table of main piping sizes (Table 3) and from the table of refrigerant piping sizes (Table 8). 2) When the piping length exceeds 40 m, increase a longer liquid or gas piping by 1 rank. Refer to the Technical Data for the details. 3) If the longest main piping length (LM) exceeds 50 m, increase the main piping size at the portion before 50 m by 1 rank for the gas tubes. Use a field supply reducer. Determine the length less than the limitation of allowable maximum piping length. For the portion that exceeds 50 m, set based on the main piping size (LA) listed in Table 3. 4) If any of the piping length exceeds 30 m, increase the size of the liquid and gas tubes by 1 rank. 5) If the total distribution piping length exceeds 500 m, maximum allowable elevation difference (H2) between the indoor units is calculated by the following formula. Make sure the indoor unit's actual elevation difference should fall within the figure calculated as follows. Unit of account (meter): 15 x (2 - total piping length (m) ÷ 500).
* The outdoor connection main piping (LO portion) is determined by the total capacity of the outdoor units that are connected to the tube ends. If the size of the existing piping is already larger than the standard piping size, it is not necessary to further increase the size. ** If the existing piping is used, and the amount of on-site refrigerant charge exceeds the value listed below, then change the size of the piping to reduce the amount of refrigerant. Total amount of refrigerant for the system with 1 outdoor unit: 50kg. Total amount of refrigerant for the system with 2 outdoor units: 80kg. Total amount of refrigerant for the system with 3 outdoor units or 4 outdoor units: 105kg.

Necessary amount of additional refrigerant charge per outdoor unit.

U-8ME2E8	U-10ME2E8	U-12ME2E8	U-14ME2E8	U-16ME2E8
5,5kg	5,5kg	7,0kg	7,0kg	7,0kg

System limitations.

Maximum number allowable connected outdoor units	4[1]
Maximum capacity allowable connected outdoor units	224 kW (80 HP)
Maximum connectable indoor units	64[2]
Maximum allowable indoor / outdoor capacity ratio	50-130 %[3]

1) Up to 4 units can be connected if the system has been extended.
2) In the case of 38 HP or smaller units, the number is limited by the total capacity of the connected indoor units.
3) If the following conditions are satisfied, the effective range is above 130 % and below 200 %.
A) Obey the limited number of connectable indoor units. B) The lower limit of operating range for heating outdoor temperature is limited to -10 °C WB (standard -25 °C WB). C) Simultaneous operation is limited to less than 130 % of connectable indoor units.

Additional refrigerant charge.

Liquid piping size Inch (mm)	Amount of refrigerant charge/m (g/m)
1/4 (6,35)	26
3/8 (9,52)	56
1/2 (12,70)	128
5/8 (15,88)	185
3/4 (19,05)	259
7/8 (22,22)	366
1 (25,40)	490

Refrigerant piping (existing piping can be used).

Piping size (mm)													
Material Temper - O						Material Temper - 1/2 H, H							
Ø6,35	t 0,8	Ø12,70	t 0,8	Ø19,05	t 1,2	Ø22,22	t 1,0	Ø28,58	t 1,0	Ø38,10	over t 1,35	Ø44,45	over t1,55
Ø9,52	t 0,8	Ø15,88	t 1,0			Ø25,40	t 1,0	Ø31,75	t 1,1	Ø41,28	over t 1,45	Ø44,45	over t1,55

* When bending the tubes, use a bending radius that is at least 4 times the outer diameter of the tubes. In addition, take sufficient care to avoid crushing or damaging the tubes when bending them.

2-Pipe ECOi EX ME2 Series

A VRF system delivering energy-saving performance, powerful operation, reliability and comfort surpassing anything previously possible. It represents a true paradigm shift in air conditioning solutions

VRF with outstanding energy-saving performance and powerful operation SEER 7,6 (18 HP model).

Technical focus

- New twin rotary inverter compressor
- High performance at extreme conditions
- Outstanding efficiency and comfort
- Extraordinary partial load and SEER/SCOP
- SEER and SCOP following to EN-14825
- Oil recovery intelligent control
- Top comfort
- Superior flexibility
- Bluefin full line up EX
- Extremely high capacity at -20 °C and unique heating capacity at -25 °C
- Smooth exhaust flow by new bell-mouth

			8 HP	10 HP	12 HP	14 HP	16 HP	18 HP	20 HP
Outdoor Units			**U-8ME2E8**	**U-10ME2E8**	**U-12ME2E8**	**U-14ME2E8**	**U-16ME2E8**	**U-18ME2E8**	**U-20ME2E8**
Power supply	Voltage	V	380/400/415	380/400/415	380/400/415	380/400/415	380/400/415	380/400/415	380/400/415
	Phase		Three Phase	Three Phase	Three Phase	Three Phase	Three Phase	Three Phase	Three Phase
	Frequency	Hz	50	50	50	50	50	50	50
Cooling capacity		kW	22,4	28,0	33,5	40,0	45,0	50,0	56,0
EER [1]		W/W	4,70	4,37	3,96	3,88	3,52	3,52	3,35
ESEER		W/W	9,33	8,67	7,94	7,73	7,19	6,95	6,18
SEER [2]			**7,4**	**6,8**	**6,7**	**7,2**	**6,4**	**7,6**	**7,0**
Running current cooling		A	7,40/7,14	10,20/9,80	13,00/12,50	16,50/15,90	20,10/19,40	22,00/21,20	25,40/24,50
Input power cooling		kW	4,77	6,41	8,47	10,30	12,80	14,20	16,70
Heating capacity		kW	25,0	31,5	37,5	45,0	50,0	56,0	63,0
COP [1]		W/W	5,13	4,76	4,73	4,56	4,42	4,38	3,94
SCOP [2]			**4,8**	**4,3**	**4,7**	**4,3**	**4,1**	**4,3**	**4,1**
Running current heating		A	7,56/7,29	10,50/11,10	12,30/11,80	15,80/15,20	17,90/17,30	20,10/19,40	24,60/23,70
Input power heating		kW	4,87	6,62	7,92	9,86	11,30	12,80	16,00
Starting current		A	1,00	1,00	1,00	2,00	2,00	2,00	2,00
External static pressure (Max)		Pa	80	80	80	80	80	80	80
Air volume		m^3/min	224	224	232	232	232	405	405
Sound pressure	Normal mode	dB(A)	54	56	59	60	61	59	60
	Silent mode	dB(A)	51	53	56	57	58	56	57
Sound power	Normal mode	dB	75	77	80	81	82	80	81
Dimension	H x W x D	mm	1842 x 770 x 1000	1842 x 770 x 1000	1842 x 1180 x 1000	1842 x 1180 x 1000	1842 x 1180 x 1000	1842 x 1540 x 1000	1842 x 1540 x 1000
Net weight		kg	210	210	270	315	315	375	375
Piping connections [3]	Liquid pipe	Inch (mm)	3/8 (9,52) / 1/2 (12,70)	3/8 (9,52) / 1/2 (12,70)	1/2 (12,70) / 5/8 (15,88)	1/2 (12,70) / 5/8 (15,88)	1/2 (12,70) / 5/8 (15,88)	5/8 (15,88) / 3/4 (19,05)	5/8 (15,88) / 3/4 (19,05)
	Gas pipe	Inch (mm)	3/4 (19,05) / 7/8 (22,22)	7/8 (22,22) / 1 (25,40)	1 (25,40) / 1-1/8 (28,58)	1 (25,40) / 1-1/8 (28,58)	1-1/8 (28,58) / 1-1/4 (31,75)	1-1/8 (28,58) / 1-1/4 (31,75)	1-1/8 (28,58) / 1-1/4 (31,75)
	Balance pipe	Inch (mm)	1/4 (6,35)	1/4 (6,35)	1/4 (6,35)	1/4 (6,35)	1/4 (6,35)	1/4 (6,35)	1/4 (6,35)
Refrigerant (R410A) / CO_2 Eq.		kg / T	5,60/11,6928	5,60/11,6928	8,30/17,3304	8,30/17,3304	8,30/17,3304	9,50/19,836	9,50/19,836
Maximum allowable indoor / outdoor capacity ratio % [4]			50 ~ 130 (200)	50 ~ 130 (200)	50 ~ 130 (200)	50 ~ 130 (200)	50 ~ 130 (200)	50 ~ 130 (200)	50 ~ 130 (200)
Operating range	Cool Min ~ Max	°C	-10 ~ +52	-10 ~ +52	-10 ~ +52	-10 ~ +52	-10 ~ +52	-10 ~ +52	-10 ~ +52
	Heat Min ~ Max	°C	-25 ~ +18	-25 ~ +18	-25 ~ +18	-25 ~ +18	-25 ~ +18	-25 ~ +18	-25 ~ +18

1) EER and COP calculation is based in accordance to EN14511. 2) SEER/SCOP is calculated based on the seasonal space cooling/heating efficiency "η" values of the COMMISSION REGULATION (EU) 2016/2281. SEER, SCOP = (η + Correction) × PEF. 3) Pipe diameter under 90 m for ultimate indoor unit / over 90 m for ultimate indoor unit (if the longest piping equivalent length exceeds 90 m, increase the sizes of the main tubes by 1 rank for gas tubes and liquid tubes). 4) If the following conditions are satisfied, the effective range is above 130 % and below 200 %: A. Obey the limited number of connectable indoor units. B. The lower limit of operating range for heating outdoor temperature is limited to -10 °C WB (standard -25 °C WB). C. Simultaneous operation is limited to less than 130 % of connectable indoor units.

Rating Conditions: Cooling Indoor 27 °C DB / 19 °C WB. Cooling Outdoor 35 °C DB / 24 °C WB. Heating Indoor 20 °C DB. Heating Outdoor 7 °C DB / 6 °C WB. (DB: Dry Bulb; WB: Wet Bulb).
Specifications subject to change without notice. For detailed information about ErP / Energy Labelling, please visit our websites www.aircon.panasonic.eu or www.ptc.panasonic.eu.

2-Pipe ECOi EX ME2 Series
High Efficiency model combination from 18 to 64 HP

			18 HP	20 HP	22 HP	24 HP	26 HP	28 HP
Model name			**U-8ME2E8**	**U-10ME2E8**	**U-10ME2E8**	**U-12ME2E8**	**U-10ME2E8**	**U-12ME2E8**
			U-10ME2E8	**U-10ME2E8**	**U-12ME2E8**	**U-12ME2E8**	**U-16ME2E8**	**U-16ME2E8**
Power supply	Voltage	V	380/400/415	380/400/415	380/400/415	380/400/415	380/400/415	380/400/415
	Phase		Three Phase	Three Phase	Three Phase	Three Phase	Three Phase	Three Phase
	Frequency	Hz	50	50	50	50	50	50
Cooling capacity		kW	50,0	56,0	61,5	68,0	73,0	78,5
EER [1]		W/W	4,55	4,38	4,13	3,93	3,80	3,69
Running current cooling		A	17,30/16,60	20,30/19,60	23,10/22,30	26,60/25,60	30,10/29,00	33,10/31,90
Input power cooling		kW	11,00	12,80	14,90	17,30	19,20	21,30
Heating capacity		kW	56,0	63,0	69,0	76,5	81,5	87,5
COP [1]		W/W	4,96	4,77	4,76	4,69	4,55	4,56
Running current heating		A	17,70/17,10	20,90/20,20	22,70/21,90	25,30/24,40	28,40/27,40	30,10/29,00
Input power heating		kW	11,30	13,20	14,50	16,30	17,90	19,20
Starting current		A	2,00	2,00	2,00	2,00	3,00	3,00
External static pressure (Max)		Pa	80	80	80	80	80	80
Air volume		m^3/min	448	448	456	464	456	464
Sound pressure	Normal / Silent mode	dB(A)	58,50/55,50	59,00/56,00	61,00/58,00	62,00/59,00	62,50/59,50	63,50/60,50
Sound power	Normal mode	dB	79,50	80,00	82,00	83,00	83,50	84,50
Dimension / Net weight	H x W x D	mm / kg	1842 x 1600 x 1000/420	1842 x 1600 x 1000/420	1842 x 2010 x 1000/480	1842 x 2420 x 1000/540	1842 x 2010 x 1000/535	1842 x 2420 x 1000/585
Piping connections [2]	Liquid pipe	Inch (mm)	5/8 (15,88) / 3/4 (19,05)	5/8 (15,88) / 3/4 (19,05)	5/8 (15,88) / 3/4 (19,05)	5/8 (15,88) / 3/4 (19,05)	3/4 (19,05) / 7/8 (22,22)	3/4 (19,05) / 7/8 (22,22)
	Gas pipe	Inch (mm)	1-1/8 (28,58) / 1-1/4 (31,75)	1-1/8 (28,58) / 1-1/4 (31,75)	1-1/8 (28,58) / 1-1/4 (31,75)	1-1/8 (28,58) / 1-1/4 (31,75)	1-1/4 (31,75) / 1-1/2 (38,10)	1-1/4 (31,75) / 1-1/2 (38,10)
	Balance pipe	Inch (mm)	1/4 (6,35)	1/4 (6,35)	1/4 (6,35)	1/4 (6,35)	1/4 (6,35)	1/4 (6,35)
Refrigerant (R410A) / CO_2 Eq.		kg / T	11,20/23,3856	11,20/23,3856	13,90/29,0232	16,60/34,6608	13,90/29,0232	16,60/34,6608
Maximum allowable indoor / outdoor capacity ratio % [3]			50 ~ 130 (200)	50 ~ 130 (200)	50 ~ 130 (200)	50 ~ 130 (200)	50 ~ 130 (200)	50 ~ 130 (200)
Operating range	Cool / Heat Min ~ Max	°C	-10 ~ +52/-25 ~ +18	-10 ~ +52/-25 ~ +18	-10 ~ +52/-25 ~ +18	-10 ~ +52/-25 ~ +18	-10 ~ +52/-25 ~ +18	-10 ~ +52/-25 ~ +18

			30 HP	32 HP	34 HP	36 HP	38 HP	40 HP
Model name			**U-14ME2E8**	**U-16ME2E8**	**U-10ME2E8**	**U-12ME2E8**	**U-10ME2E8**	**U-12ME2E8**
			U-16ME2E8	**U-16ME2E8**	**U-12ME2E8**	**U-12ME2E8**	**U-12ME2E8**	**U-12ME2E8**
					U-12ME2E8	**U-12ME2E8**	**U-16ME2E8**	**U-16ME2E8**
Power supply	Voltage	V	380/400/415	380/400/415	380/400/415	380/400/415	380/400/415	380/400/415
	Phase		Three Phase	Three Phase	Three Phase	Three Phase	Three Phase	Three Phase
	Frequency	Hz	50	50	50	50	50	50
Cooling capacity		kW	85,0	90,0	96,0	101,0	107,0	113,0
EER [1]		W/W	3,68	3,52	4,05	3,95	3,84	3,75
Running current cooling		A	36,60/35,30	40,20/38,70	36,80/35,50	39,30/37,90	43,80/42,20	46,70/45,00
Input power cooling		kW	23,10	25,60	23,70	25,60	27,90	30,10
Heating capacity		kW	95,0	100,0	108,0	113,0	119,0	127,0
COP [1]		W/W	4,48	4,42	4,72	4,73	4,61	4,57
Running current heating		A	33,60/32,40	35,80/34,60	35,90/34,60	37,10/35,80	40,50/39,00	43,60/42,00
Input power heating		kW	21,20	22,60	22,90	23,90	25,80	27,80
Starting current		A	4,00	4,00	3,00	3,00	4,00	4,00
External static pressure (Max)		Pa	80	80	80	80	80	80
Air volume		m^3/min	464	464	688	696	688	696
Sound pressure	Normal / Silent mode	dB(A)	63,50/60,50	64,00/61,00	63,00/60,00	64,00/61,00	64,00/61,00	64,50/61,50
Sound power	Normal mode	dB	84,50	85,00	84,00	85,00	85,00	85,50
Dimension / Net weight	H x W x D	mm / kg	1842 x 2420 x 1000/630	1842 x 2420 x 1000/630	1842 x 3250 x 1000/750	1842 x 3660 x 1000/810	1842 x 3250 x 1000/795	1842 x 3660 x 1000/855
Piping connections [2]	Liquid pipe	Inch (mm)	3/4 (19,05) / 7/8 (22,22)	3/4 (19,05) / 7/8 (22,22)	3/4 (19,05) / 7/8 (22,22)	3/4 (19,05) / 7/8 (22,22)	3/4 (19,05) / 7/8 (22,22)	3/4 (19,05) / 7/8 (22,22)
	Gas pipe	Inch (mm)	1-1/4 (31,75) / 1-1/2 (38,10)	1-1/4 (31,75) / 1-1/2 (38,10)	1-1/4 (31,75) / 1-1/2 (38,10)	1-1/2 (38,10) / 1-5/8 (41,28)	1-1/2 (38,10) / 1-5/8 (41,28)	1-1/2 (38,10) / 1-5/8 (41,28)
	Balance pipe	Inch (mm)	1/4 (6,35)	1/4 (6,35)	1/4 (6,35)	1/4 (6,35)	1/4 (6,35)	1/4 (6,35)
Refrigerant (R410A) / CO_2 Eq.		kg / T	16,60/34,6608	16,60/34,6608	22,20/46,3536	24,90/51,9912	22,20/46,3536	24,90/46,3536
Maximum allowable indoor / outdoor capacity ratio % [3]			50 ~ 130 (200)	50 ~ 130 (200)	50 ~ 130 (200)	50 ~ 130 (200)	50 ~ 130 (200)	50 ~ 130 (200)
Operating range	Cool / Heat Min ~ Max	°C	-10 ~ +52/-25 ~ +18	-10 ~ +52/-25 ~ +18	-10 ~ +52/-25 ~ +18	-10 ~ +52/-25 ~ +18	-10 ~ +52/-25 ~ +18	-10 ~ +52/-25 ~ +18

Data is for reference. 1) EER and COP calculation is based in accordance to EN14511. 2) Pipe diameter under 90 m for ultimate indoor unit / over 90 m for ultimate indoor unit (if the longest piping equivalent length exceeds 90 m, increase the sizes of the main tubes by 1 rank for gas tubes and liquid tubes). 3) If the following conditions are satisfied, the effective range is above 130 % and below 200 %: A. Obey the limited number of connectable indoor units. B. The lower limit of operating range for heating outdoor temperature is limited to -10 °C WB (standard -25 °C WB). C. Simultaneous operation is limited to less than 130 % of connectable indoor units.

Model name			42 HP	44 HP	46 HP	48 HP	50 HP	52 HP
			U-10ME2E8 U-16ME2E8 U-16ME2E8	U-12ME2E8 U-16ME2E8 U-16ME2E8	U-14ME2E8 U-16ME2E8 U-16ME2E8	U-16ME2E8 U-16ME2E8 U-16ME2E8	U-10ME2E8 U-12ME2E8 U-12ME2E8 U-16ME2E8	U-12ME2E8 U-12ME2E8 U-12ME2E8 U-16ME2E8
Power supply	Voltage	V	380/400/415	380/400/415	380/400/415	380/400/415	380/400/415	380/400/415
	Phase		Three Phase	Three Phase	Three Phase	Three Phase	Three Phase	Three Phase
	Frequency	Hz	50	50	50	50	50	50
Cooling capacity		kW	118,0	124,0	130,0	135,0	140,0	145,0
EER [1]		W/W	3,69	3,62	3,62	3,52	3,87	3,82
Running current cooling		A	50,20/48,40	53,20/51,30	56,90/54,90	60,20/58,10	56,20/54,20	59,00/56,80
Input power cooling		kW	32,00	34,30	35,90	38,40	36,20	38,00
Heating capacity		kW	132,0	138,0	145,0	150,0	155,0	160,0
COP [1]		W/W	4,49	4,50	4,46	4,42	4,65	4,66
Running current heating		A	46,60/44,90	48,20/46,40	51,50/49,70	53,80/51,80	52,20/50,40	53,80/51,90
Input power heating		kW	29,40	30,70	32,50	33,90	33,30	34,30
Starting current		A	5,00	5,00	6,00	6,00	5,00	5,00
External static pressure (Max)		Pa	80	80	80	80	80	80
Air volume		m³/min	688	696	696	696	920	928
Sound pressure	Normal / Silent mode	dB(A)	65,00/62,00	65,50/62,50	65,50/62,50	66,00/63,00	65,50/62,50	66,00/63,00
Sound power	Normal mode	dB	86,00	86,50	86,50	87,00	86,50	87,00
Dimension / Net weight	H x W x D	mm / kg	1842 x 3250 x 1000/840	1842 x 3660 x 1000/900	1842 x 3660 x 1000/945	1842 x 3660 x 1000/945	1842 x 4490 x 1000/1065	1842 x 4900 x 1000/1125
Piping connections [2]	Liquid pipe	Inch (mm)	3/4 (19,05) / 7/8 (22,22)	3/4 (19,05) / 7/8 (22,22)	3/4 (19,05) / 7/8 (22,22)	3/4 (19,05) / 7/8 (22,22)	3/4 (19,05) / 7/8 (22,22)	3/4 (19,05) / 7/8 (22,22)
	Gas pipe	Inch (mm)	1-1/2 (38,10) / 1-5/8 (41,28)	1-1/2 (38,10) / 1-5/8 (41,28)	1-1/2 (38,10) / 1-5/8 (41,28)	1-1/2 (38,10) / 1-5/8 (41,28)	1-1/2 (38,10) / 1-5/8 (41,28)	1-1/2 (38,10) / 1-5/8 (41,28)
	Balance pipe	Inch (mm)	1/4 (6,35)	1/4 (6,35)	1/4 (6,35)	1/4 (6,35)	1/4 (6,35)	1/4 (6,35)
Refrigerant (R410A) / CO_2 Eq.		kg / T	22,20/51,9912	24,90/51,9912	24,90/51,9912	24,90/51,9912	30,50/63,6840	33,20/69,3216
Maximum allowable indoor / outdoor capacity ratio % [3]			50 ~ 130 (200)	50 ~ 130 (200)	50 ~ 130 (200)	50 ~ 130 (200)	50 ~ 130 (200)	50 ~ 130 (200)
Operating range	Cool / Heat Min ~ Max	°C	-10 ~ +52 / -25 ~ +18	-10 ~ +52 / -25 ~ +18	-10 ~ +52 / -25 ~ +18	-10 ~ +52 / -25 ~ +18	-10 ~ +52 / -25 ~ +18	-10 ~ +52 / -25 ~ +18

Model name			54 HP	56 HP	58 HP	60 HP	62 HP	64 HP
			U-10ME2E8 U-12ME2E8 U-16ME2E8 U-16ME2E8	U-12ME2E8 U-12ME2E8 U-16ME2E8 U-16ME2E8	U-10ME2E8 U-16ME2E8 U-16ME2E8 U-16ME2E8	U-12ME2E8 U-16ME2E8 U-16ME2E8 U-16ME2E8	U-14ME2E8 U-16ME2E8 U-16ME2E8 U-16ME2E8	U-16ME2E8 U-16ME2E8 U-16ME2E8 U-16ME2E8
Power supply	Voltage	V	380/400/415	380/400/415	380/400/415	380/400/415	380/400/415	380/400/415
	Phase		Three Phase	Three Phase	Three Phase	Three Phase	Three Phase	Three Phase
	Frequency	Hz	50	50	50	50	50	50
Cooling capacity		kW	151,0	156,0	162,0	168,0	174,0	180,0
EER [1]		W/W	3,75	3,71	3,65	3,60	3,60	3,52
Running current cooling		A	63,20/60,90	65,30/63,00	69,70/67,10	73,30/70,60	75,80/73,00	80,30/77,40
Input power cooling		kW	40,30	42,10	44,40	46,70	48,30	51,20
Heating capacity		kW	169,0	175,0	182,0	189,0	195,0	201,0
COP [1]		W/W	4,56	4,56	4,47	4,47	4,45	4,42
Running current heating		A	58,80/56,70	60,20/58,10	64,60/62,20	67,10/64,70	69,50/67,00	72,20/69,60
Input power heating		kW	37,10	38,40	40,70	42,30	43,80	45,50
Starting current		A	6,00	6,00	7,00	7,00	8,00	8,00
External static pressure (Max)		Pa	80	80	80	80	80	80
Air volume		m³/min	920	928	920	928	928	928
Sound pressure	Normal / Silent mode	dB(A)	66,00/63,00	66,50/63,50	66,50/63,50	67,00/64,00	67,00/64,00	67,00/64,00
Sound power	Normal mode	dB	87,00	87,50	87,50	88,00	88,00	88,00
Dimension / Net weight	H x W x D	mm / kg	1842 x 4490 x 1000/1110	1842 x 4900 x 1000/1170	1842 x 4490 x 1000/1155	1842 x 4900 x 1000/1215	1842 x 4900 x 1000/1260	1842 x 4900 x 1000/1260
Piping connections [2]	Liquid pipe	Inch (mm)	3/4 (19,05) / 7/8 (22,22)	3/4 (19,05) / 7/8 (22,22)	3/4 (19,05) / 7/8 (22,22)	3/4 (19,05) / 7/8 (22,22)	3/4 (19,05) / 7/8 (22,22)	3/4 (19,05) / 7/8 (22,22)
	Gas pipe	Inch (mm)	1-1/2 (38,10) / 1-5/8 (41,28)	1-1/2 (38,10) / 1-5/8 (41,28)	1-1/2 (38,10) / 1-5/8 (41,28)	1-1/2 (38,10) / 1-5/8 (41,28)	1-5/8 (41,28) / 1-3/4 (44,45)	1-5/8 (41,28) / 1-3/4 (44,45)
	Balance pipe	Inch (mm)	1/4 (6,35)	1/4 (6,35)	1/4 (6,35)	1/4 (6,35)	1/4 (6,35)	1/4 (6,35)
Refrigerant (R410A) / CO_2 Eq.		kg / T	30,50/63,6840	33,20/69,3216	30,50/63,6840	33,20/69,3216	33,20/69,3216	33,20/69,3216
Maximum allowable indoor / outdoor capacity ratio % [3]			50 ~ 130 (200)	50 ~ 130 (200)	50 ~ 130 (200)	50 ~ 130 (200)	50 ~ 130 (200)	50 ~ 130 (200)
Operating range	Cool / Heat Min ~ Max	°C	-10 ~ +52 / -25 ~ +18	-10 ~ +52 / -25 ~ +18	-10 ~ +52 / -25 ~ +18	-10 ~ +52 / -25 ~ +18	-10 ~ +52 / -25 ~ +18	-10 ~ +52 / -25 ~ +18

Data is for reference. 1) EER and COP calculation is based in accordance to EN14511. 2) Pipe diameter under 90 m for ultimate indoor unit / over 90 m for ultimate indoor unit (if the longest piping equivalent length exceeds 90 m, increase the sizes of the main tubes by 1 rank for gas tubes and liquid tubes). 3) If the following conditions are satisfied, the effective range is above 130 % and below 200 %: A. Obey the limited number of connectable indoor units. B. The lower limit of operating range for heating outdoor temperature is limited to -10 °C WB (standard -25 °C WB). C. Simultaneous operation is limited to less than 130 % of connectable indoor units.

Rating Conditions: Cooling Indoor 27 °C DB / 19 °C WB. Cooling Outdoor 35 °C DB / 24 °C WB. Heating Indoor 20 °C DB. Heating Outdoor 7 °C DB / 6 °C WB. (DB: Dry Bulb; WB: Wet Bulb).
Specifications subject to change without notice. For detailed information about ErP / Energy Labelling, please visit our websites www.aircon.panasonic.eu or www.ptc.panasonic.eu.

2-Pipe ECOi EX ME2 Series
Space Saving model combination from 22 to 80 HP

Model name			22 HP	24 HP	26 HP	28 HP	30 HP	32 HP	34 HP
			U-10ME2E8 U-12ME2E8	U-12ME2E8 U-12ME2E8	U-10ME2E8 U-16ME2E8	U-12ME2E8 U-16ME2E8	U-14ME2E8 U-16ME2E8	U-16ME2E8 U-16ME2E8	U-14ME2E8 U-20ME2E8
Power supply	Voltage	V	380/400/415	380/400/415	380/400/415	380/400/415	380/400/415	380/400/415	380/400/415
	Phase		Three Phase	Three Phase	Three Phase	Three Phase	Three Phase	Three Phase	Three Phase
	Frequency	Hz	50	50	50	50	50	50	50
Cooling capacity		kW	61,5	68,0	73,0	78,5	85,0	90,0	96,0
EER [1]		W/W	4,13	3,93	3,80	3,69	3,68	3,52	3,56
Running current cooling		A	23,10/22,30	26,60/25,60	30,10/29,00	33,10/31,90	36,60/35,30	40,20/38,70	41,90/40,40
Input power cooling		kW	14,90	17,30	19,20	21,30	23,10	25,60	27,00
Heating capacity		kW	69,0	76,5	81,5	87,5	95,0	100,0	108,0
COP [1]		W/W	4,76	4,69	4,55	4,56	4,48	4,42	4,17
Running current heating		A	22,70/21,90	25,30/24,40	28,40/27,40	30,10/29,00	33,60/32,40	35,80/34,60	40,60/39,20
Input power heating		kW	14,50	16,30	17,90	19,20	21,20	22,60	25,90
Starting current		A	2,00	2,00	3,00	3,00	4,00	4,00	4,00
External static pressure (Max)		Pa	80	80	80	80	80	80	80
Air volume		m^3/min	456	464	456	464	464	464	637
Sound pressure	Normal / Silent mode	dB(A)	61,00/58,00	62,00/59,00	62,50/59,50	63,50/60,50	63,50/60,50	64,00/61,00	63,00/60,00
Sound power	Normal mode	dB	82,00	83,00	83,50	84,50	84,50	85,00	84,00
Dimension / Net weight	H x W x D	mm / kg	1842 x 2010 x 1000 / 480	1842 x 2420 x 1000 / 540	1842 x 2010 x 1000 / 525	1842 x 2420 x 1000 / 585	1842 x 2420 x 1000 / 630	1842 x 2420 x 1000 / 630	1842 x 2780 x 1000 / 690
Piping connections [2]	Liquid pipe	Inch (mm)	5/8 (15,88) / 3/4 (19,05)	5/8 (15,88) / 3/4 (19,05)	3/4 (19,05) / 7/8 (22,22)	3/4 (19,05) / 7/8 (22,22)	3/4 (19,05) / 7/8 (22,22)	3/4 (19,05) / 7/8 (22,22)	3/4 (19,05) / 7/8 (22,22)
	Gas pipe	Inch (mm)	1-1/8 (28,58) / 1-1/4 (31,75)	1-1/8 (28,58) / 1-1/4 (31,75)	1-1/4 (31,75) / 1-1/2 (38,10)	1-1/4 (31,75) / 1-1/2 (38,10)	1-1/4 (31,75) / 1-1/2 (38,10)	1-1/4 (31,75) / 1-1/2 (38,10)	1-1/4 (31,75) / 1-1/2 (38,10)
	Balance pipe	Inch (mm)	1/4 (6,35)	1/4 (6,35)	1/4 (6,35)	1/4 (6,35)	1/4 (6,35)	1/4 (6,35)	1/4 (6,35)
Refrigerant (R410A) / CO_2 Eq.		kg / T	13,90/23,3856	16,60/34,6608	13,90/29,0232	16,60/34,6608	16,60/34,6608	16,60/34,6608	17,80/37,1664
Maximum allowable indoor / outdoor capacity ratio % [3]			50 ~ 130 (200)	50 ~ 130 (200)	50 ~ 130 (200)	50 ~ 130 (200)	50 ~ 130 (200)	50 ~ 130 (200)	50 ~ 130 (200)
Operating range	Cool Min ~ Max	°C	-10 ~ +52	-10 ~ +52	-10 ~ +52	-10 ~ +52	-10 ~ +52	-10 ~ +52	-10 ~ +52
	Heat Min ~ Max	°C	-25 ~ +18	-25 ~ +18	-25 ~ +18	-25 ~ +18	-25 ~ +18	-25 ~ +18	-25 ~ +18

Model name			36 HP	38 HP	40 HP	42 HP	44 HP	46 HP	48 HP
			U-16ME2E8 U-20ME2E8	U-18ME2E8 U-20ME2E8	U-20ME2E8 U-20ME2E8	U-10ME2E8 U-16ME2E8 U-16ME2E8	U-12ME2E8 U-16ME2E8 U-16ME2E8	U-14ME2E8 U-16ME2E8 U-16ME2E8	U-16ME2E8 U-16ME2E8 U-16ME2E8
Power supply	Voltage	V	380/400/415	380/400/415	380/400/415	380/400/415	380/400/415	380/400/415	380/400/415
	Phase		Three Phase	Three Phase	Three Phase	Three Phase	Three Phase	Three Phase	Three Phase
	Frequency	Hz	50	50	50	50	50	50	50
Cooling capacity		kW	101,0	107,0	113,0	118,0	124,0	130,0	135,0
EER [1]		W/W	3,42	3,42	3,34	3,69	3,62	3,62	3,52
Running current cooling		A	45,30/43,70	48,10/46,30	51,40/49,50	50,20/48,40	53,20/51,30	56,90/54,90	60,20/58,10
Input power cooling		kW	25,9	31,3	33,8	32,0	34,3	35,9	38,4
Heating capacity		kW	113,0	119,0	127,0	132,0	138,0	145,0	150,0
COP [1]		W/W	4,14	4,13	3,92	4,49	4,50	4,46	4,42
Running current heating		A	42,40/40,80	44,70/43,10	49,80/48,00	46,60/44,90	48,20/46,40	51,50/49,70	53,80/51,80
Input power heating		kW	27,30	28,80	32,40	29,40	30,70	32,50	33,90
Starting current		A	4,00	4,00	4,00	5,00	5,00	6,00	6,00
External static pressure (Max)		Pa	80	80	80	80	80	80	80
Air volume		m^3/min	637	810	810	688	696	696	696
Sound pressure	Normal / Silent mode	dB(A)	63,50/60,50	62,50/59,50	63,00/60,00	65,00/62,00	65,50/62,50	65,50/62,50	66,00/63,00
Sound power	Normal mode	dB	84,50	83,50	84,00	86,00	86,50	86,50	87,00
Dimension / Net weight	H x W x D	mm / kg	1842 x 2780 x 1000 / 690	1842 x 3140 x 1000 / 750	1842 x 3140 x 1000 / 750	1842 x 3250 x 1000 / 840	1842 x 3660 x 1000 / 900	1842 x 3660 x 1000 / 945	1842 x 3660 x 1000 / 945
Piping connections [2]	Liquid pipe	Inch (mm)	3/4 (19,05) / 7/8 (22,22)	3/4 (19,05) / 7/8 (22,22)	3/4 (19,05) / 7/8 (22,22)	3/4 (19,05) / 7/8 (22,22)	3/4 (19,05) / 7/8 (22,22)	3/4 (19,05) / 7/8 (22,22)	3/4 (19,05) / 7/8 (22,22)
	Gas pipe	Inch (mm)	1-1/2 (38,10) / 1-5/8 (41,28)	1-1/2 (38,10) / 1-5/8 (41,28)	1-1/2 (38,10) / 1-5/8 (41,28)	1-1/2 (38,10) / 1-5/8 (41,28)	1-1/2 (38,10) / 1-5/8 (41,28)	1-1/2 (38,10) / 1-5/8 (41,28)	1-1/2 (38,10) / 1-5/8 (41,28)
	Balance pipe	Inch (mm)	1/4 (6,35)	1/4 (6,35)	1/4 (6,35)	1/4 (6,35)	1/4 (6,35)	1/4 (6,35)	1/4 (6,35)
Refrigerant (R410A) / CO_2 Eq.		kg / T	17,80/37,1664	19,00/39,672	19,00/39,672	22,20/46,3536	24,90/51,9912	24,90/51,9912	24,90/51,9912
Maximum allowable indoor / outdoor capacity ratio % [3]			50 ~ 130 (200)	50 ~ 130 (200)	50 ~ 130 (200)	50 ~ 130 (200)	50 ~ 130 (200)	50 ~ 130 (200)	50 ~ 130 (200)
Operating range	Cool Min ~ Max	°C	-10 ~ +52	-10 ~ +52	-10 ~ +52	-10 ~ +52	-10 ~ +52	-10 ~ +52	-10 ~ +52
	Heat Min ~ Max	°C	-25 ~ +18	-25 ~ +18	-25 ~ +18	-25 ~ +18	-25 ~ +18	-25 ~ +18	-25 ~ +18

1) EER and COP calculation is based in accordance to EN14511. 2) Pipe diameter under 90 m for ultimate indoor unit / over 90 m for ultimate indoor unit (if the longest piping equivalent length exceeds 90 m, increase the sizes of the main tubes by 1 rank for gas tubes and liquid tubes). 3) If the following conditions are satisfied, the effective range is above 130 % and below 200 %: A. Obey the limited number of connectable indoor units. B. The lower limit of operating range for heating outdoor temperature is limited to -10 °C WB (standard -25 °C WB). C. Simultaneous operation is limited to less than 130 % of connectable indoor units.

Model name			50 HP	52 HP	54 HP	56 HP	58 HP	60 HP	62 HP	64 HP
			U-14ME2E8 U-16ME2E8 U-20ME2E8	U-16ME2E8 U-20ME2E8	U-14ME2E8 U-20ME2E8	U-16ME2E8 U-20ME2E8	U-18ME2E8 U-20ME2E8	U-20ME2E8 U-20ME2E8	U-14ME2E8 U-16ME2E8 U-16ME2E8	U-16ME2E8 U-16ME2E8 U-16ME2E8
Power supply	Voltage	V	380/400/415	380/400/415	380/400/415	380/400/415	380/400/415	380/400/415	380/400/415	380/400/415
	Phase		Three Phase	Three Phase	Three Phase	Three Phase	Three Phase	Three Phase	Three Phase	Three Phase
	Frequency	Hz	50	50	50	50	50	50	50	50
Cooling capacity		kW	140,0	145,0	151,0	156,0	162,0	168,0	174,0	180,0
EER [1]		W/W	3,55	3,46	3,49	3,41	3,40	3,35	3,60	3,52
Running current cooling		A	61,10/58,90	65,00/62,70	66,50/64,10	70,30/67,80	73,10/70,40	76,10/73,40	75,80/73,00	80,30/77,40
Input power cooling		kW	39,40	41,90	43,30	45,80	47,60	50,10	48,30	51,20
Heating capacity		kW	155,0	160,0	169,0	175,0	182,0	189,0	195,0	201,0
COP [1]		W/W	4,29	4,27	4,11	4,08	4,06	3,94	4,45	4,42
Running current heating		A	56,60/54,60	58,80/56,70	63,80/61,50	66,60/64,20	69,50/67,00	73,70/71,00	69,50/67,00	72,20/69,60
Input power heating		kW	36,10	37,50	41,10	42,90	44,80	48,00	43,80	45,50
Starting current		A	6,00	6,00	6,00	6,00	6,00	6,00	8,00	8,00
External static pressure (Max)		Pa	80	80	80	80	80	80	80	80
Air volume		m³/min	869	869	1042	1042	1215	1215	928	928
Sound pressure	Normal / Silent mode	dB(A)	65,50/62,50	65,50/62,50	65,00/62,00	65,50/62,50	64,50/61,50	65,00/62,00	67,00/64,00	67,00/64,00
Sound power	Normal mode	dB	86,50	86,50	86,00	86,50	85,50	86,00	88,00	88,00
Dimension / Net weight	H x W x D	mm / kg	1842 x 4020 x 1000/1005	1842 x 4020 x 1000/1005	1842 x 4380 x 1000/1065	1842 x 4380 x 1000/1065	1842 x 4740 x 1000/1125	1842 x 4740 x 1000/1125	1842 x 4900 x 1000/1260	1842 x 4900 x 1000/1260
Piping connections [2]	Liquid pipe	Inch (mm)	3/4 (19,05) / 7/8 (22,22)	3/4 (19,05) / 7/8 (22,22)	3/4 (19,05) / 7/8 (22,22)	3/4 (19,05) / 7/8 (22,22)	3/4 (19,05) / 7/8 (22,22)	3/4 (19,05) / 7/8 (22,22)	3/4 (19,05) / 7/8 (22,22)	3/4 (19,05) / 7/8 (22,22)
	Gas pipe	Inch (mm)	1-1/2 (38,10) / 1-5/8 (41,28)	1-1/2 (38,10) / 1-5/8 (41,28)	1-1/2 (38,10) / 1-5/8 (41,28)	1-1/2 (38,10) / 1-5/8 (41,28)	1-1/2 (38,10) / 1-5/8 (41,28)	1-1/2 (38,10) / 1-5/8 (41,28)	1-5/8 (41,28) / 1-3/4 (44,45)	1-5/8 (41,28) / 1-3/4 (44,45)
	Balance pipe	Inch (mm)	1/4 (6,35)	1/4 (6,35)	1/4 (6,35)	1/4 (6,35)	1/4 (6,35)	1/4 (6,35)	1/4 (6,35)	1/4 (6,35)
Refrigerant (R410A) / CO_2 Eq.		kg / T	26,10/54,4968	26,10/54,4968	27,30/57,0024	27,30/57,0024	28,50/59,508	28,50/59,508	33,20/69,3216	33,20/69,3216
Maximum allowable indoor / outdoor capacity ratio % [3]			50 ~ 130 (200)	50 ~ 130 (200)	50 ~ 130 (200)	50 ~ 130 (200)	50 ~ 130 (200)	50 ~ 130 (200)	50 ~ 130 (200)	50 ~ 130 (200)
Operating range	Cool Min ~ Max	°C	-10 ~ +52	-10 ~ +52	-10 ~ +52	-10 ~ +52	-10 ~ +52	-10 ~ +52	-10 ~ +52	-10 ~ +52
	Heat Min ~ Max	°C	-25 ~ +18	-25 ~ +18	-25 ~ +18	-25 ~ +18	-25 ~ +18	-25 ~ +18	-25 ~ +18	-25 ~ +18

Model name			66 HP	68 HP	70 HP	72 HP	74 HP	76 HP	78 HP	80 HP
			U-10ME2E8 U-16ME2E8 U-20ME2E8	U-12ME2E8 U-16ME2E8 U-20ME2E8	U-10ME2E8 U-20ME2E8 U-20ME2E8	U-16ME2E8 U-16ME2E8 U-20ME2E8	U-16ME2E8 U-18ME2E8 U-20ME2E8	U-16ME2E8 U-20ME2E8 U-20ME2E8	U-18ME2E8 U-20ME2E8 U-20ME2E8	U-20ME2E8 U-20ME2E8 U-20ME2E8
Power supply	Voltage	V	380/400/415	380/400/415	380/400/415	380/400/415	380/400/415	380/400/415	380/400/415	380/400/415
	Phase		Three Phase	Three Phase	Three Phase	Three Phase	Three Phase	Three Phase	Three Phase	Three Phase
	Frequency	Hz	50	50	50	50	50	50	50	50
Cooling capacity		kW	185,0	190,0	196,0	202,0	208,0	213,0	219,0	224,0
EER [1]		W/W	3,52	3,49	3,47	3,42	3,42	3,39	3,38	3,35
Running current cooling		A	80,80/77,80	83,70/80,70	86,80/83,60	90,60/87,30	93,40/90,00	96,60/93,10	98,30/94,70	101,50/97,80
Input power cooling		kW	52,60	54,50	56,50	59,00	60,80	62,90	64,70	66,80
Heating capacity		kW	207,0	213,0	219,0	226,0	233,0	239,0	245,0	252,0
COP [1]		W/W	4,16	4,18	4,05	4,14	4,12	4,03	4,03	3,94
Running current heating		A	77,10/74,30	79,20/76,30	83,10/80,10	84,70/81,70	87,70/84,50	92,00/88,70	93,40/90,00	98,30/94,70
Input power heating		kW	49,70	51,00	54,10	54,60	56,50	59,30	60,80	64,00
Starting current		A	7,00	7,00	7,00	8,00	8,00	8,00	8,00	8,00
External static pressure (Max)		Pa	80	80	80	80	80	80	80	80
Air volume		m³/min	1266	1274	1439	1274	1447	1447	1620	1620
Sound pressure	Normal / Silent mode	dB(A)	66,00/63,00	66,50/63,50	65,50/62,50	66,50/63,50	66,50/63,50	66,50/63,50	66,00/63,00	66,00/63,00
Sound power	Normal mode	dB	87,00	87,50	86,50	87,50	87,50	87,50	87,00	87,00
Dimension / Net weight	H x W x D	mm / kg	1842 x 5210 x 1000/1275	1842 x 5620 x 1000/1335	1842 x 5570 x 1000/1335	1842 x 5620 x 1000/1380	1842 x 5980 x 1000/1440	1842 x 5980 x 1000/1440	1842 x 6340 x 1000/1500	1842 x 6340 x 1000/1500
Piping connections [2]	Liquid pipe	Inch (mm)	3/4 (19,05) / 7/8 (22,22)	7/8 (22,22) / 1 (25,04)	7/8 (22,22) / 1 (25,04)	7/8 (22,22) / 1 (25,04)	7/8 (22,22) / 1 (25,04)	7/8 (22,22) / 1 (25,04)	7/8 (22,22) / 1 (25,04)	7/8 (22,22) / 1 (25,04)
	Gas pipe	Inch (mm)	1-5/8 (41,28) / 1-3/4 (44,45)	1-5/8 (41,28) / 1-3/4 (44,45)	1-5/8 (41,28) / 1-3/4 (44,45)	1-3/4 (44,45) / 2 (50,80)	1-3/4 (44,45) / 2 (50,80)	1-3/4 (44,45) / 2 (50,80)	1-3/4 (44,45) / 2 (50,80)	1-3/4 (44,45) / 2 (50,80)
	Balance pipe	Inch (mm)	1/4 (6,35)	1/4 (6,35)	1/4 (6,35)	1/4 (6,35)	1/4 (6,35)	1/4 (6,35)	1/4 (6,35)	1/4 (6,35)
Refrigerant (R410A) / CO_2 Eq.		kg / T	32,90/68,6952	35,60/74,3328	34,10/19,836	35,80/68,6952	36,80/76,8384	36,80/76,8384	38,00/79,344	38,00/79,344
Maximum allowable indoor / outdoor capacity ratio % [3]			50 ~ 130 (200)	50 ~ 130 (200)	50 ~ 130 (200)	50 ~ 130 (200)	50 ~ 130 (200)	50 ~ 130 (200)	50 ~ 130 (200)	50 ~ 130 (200)
Operating range	Cool Min ~ Max	°C	-10 ~ +52	-10 ~ +52	-10 ~ +52	-10 ~ +52	-10 ~ +52	-10 ~ +52	-10 ~ +52	-10 ~ +52
	Heat Min ~ Max	°C	-25 ~ +18	-25 ~ +18	-25 ~ +18	-25 ~ +18	-25 ~ +18	-25 ~ +18	-25 ~ +18	-25 ~ +18

1) EER and COP calculation is based in accordance to EN14511. 2) Pipe diameter under 90 m for ultimate indoor unit / over 90 m for ultimate indoor unit (if the longest piping equivalent length exceeds 90 m, increase the sizes of the main tubes by 1 rank for gas tubes and liquid tubes). 3) If the following conditions are satisfied, the effective range is above 130 % and below 200 %: A. Obey the limited number of connectable indoor units. B. The lower limit of operating range for heating outdoor temperature is limited to -10 °C WB (standard -25 °C WB). C. Simultaneous operation is limited to less than 130 % of connectable indoor units.

Rating Conditions: Cooling Indoor 27 °C DB / 19 °C WB. Cooling Outdoor 35 °C DB / 24 °C WB. Heating Indoor 20 °C DB. Heating Outdoor 7 °C DB / 6 °C WB. (DB: Dry Bulb; WB: Wet Bulb).
Specifications subject to change without notice. For detailed information about ErP / Energy Labelling, please visit our websites www.aircon.panasonic.eu or www.ptc.panasonic.eu.

3-Pipe ECOi EX MF3 Series

Simultaneous heating and cooling VRF System

The Panasonic 3-Pipe ECOi EX MF3 Series offers the ideal solution to meet customer's demand.

Upgraded energy efficiency utilized ECOi EX technology.
· SEER / SCOP improved in full capacities from 8 to 16 HP
· SEER / SCOP follows LOT21 from started from January 2018
· EER / COP is certified in Eurovent

Design flexibility.
· High reliability even under tough temperature condition
· Maximum 52 indoor units connectable
· Slim heat recovery box with just 200 mm height
· Farthest piping length between indoor units and outdoor units: 200 m

Excellent seasonal energy saving.

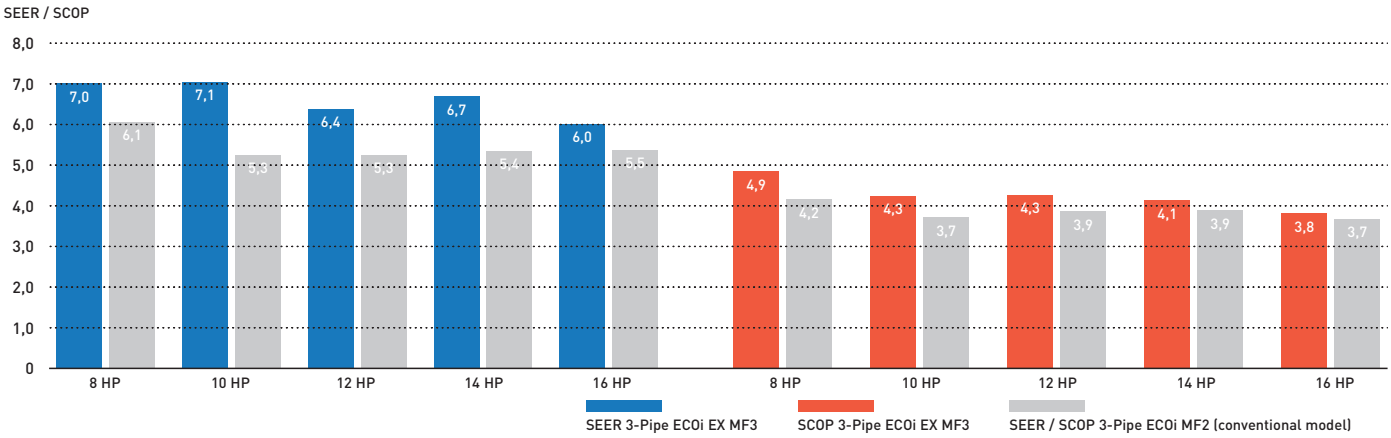

Extended design operation conditions

Cooling design operation conditions: The cooling operation range has been extended to -10 °C ~ 52 °C by changing the outdoor fan to an Inverter type.
Heating design operation conditions: Stable heating operation even with an outside air temperature of -20 °C. The heating operation range has been extended to -20 °C by use of a compressor with a high-pressure vessel.

Wide temperature setting range
Wired remote control heating temperature setting range is 16 to 30 °C.

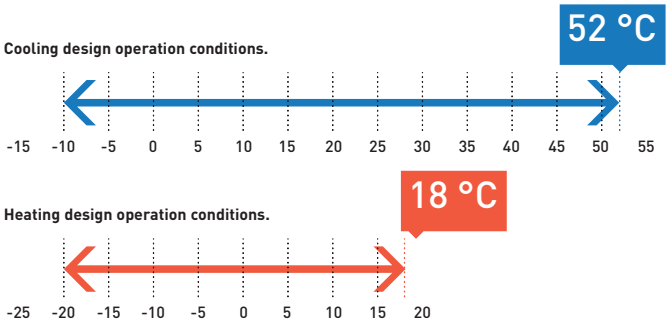

Cooling: Outside air temperature °C (DB). Heating: Outside air temperature °C (WB).

Increased maximum number of connectable indoor units

Maximum 48 HP with 52 indoor units can be set up according to user needs.
Connectable indoor/outdoor unit capacity ratio up to 150 %.

System (HP)	8	10	12	14	16	18	20	22	24	26	28	30	32	34	36	38	40	42	44	46	48
Connectable indoor units*: 150 %	19	24	29	34	39	43	48	52				52									

*Depending on indoor units types. Please check service manuals.

Power suppression control for energy saving (Demand control) [1]

The 3-Pipe ECOi EX MF3 Series has a built-in demand function which uses the inverter characteristics. With this demand function, the power consumption can be set in three steps, and operation [2] at optimum performance is performed according to the setting and the power consumption. This function is useful to reduce the annual power consumption and to save electricity costs while maintaining comfort.

1) An outdoor Seri-Para I/O unit is required for demand input.
2) Setting is possible as 0 % or in the range from 40 to 100 % (in steps of 5 %). At the time of shipping, setting has been done to the three steps of 0 %, 70 %, and 100 %.

Simultaneous heating and cooling VRF system. The 3-Pipe ECOi EX MF3 Series offers the solution for the most demanding customers.

Slim 3-Pipe Control Box Kit / Multiple connection type

Heat Recovery Box to connect multiple indoor units with just one box, 4, 6 and up to 8 indoor units or groups.
The height is only 200 mm. This is good advantage specially in hotel applications, where space for connecting several boxes is limited.

Individual control of multiple indoor units with solenoid valve kits.
· Any design and layout can be used in a single system.
· Cooling operation is possible up to an outdoor temperature of -10 °C.

System structure.

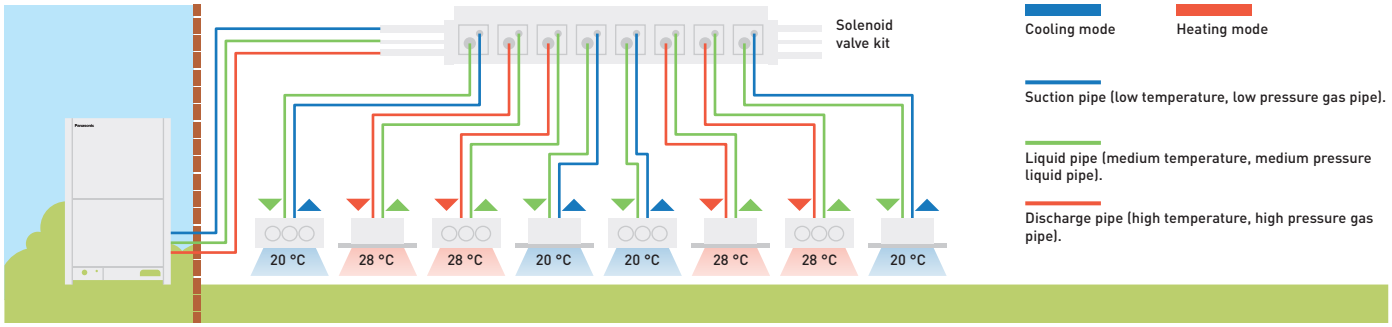

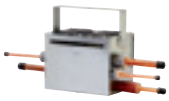
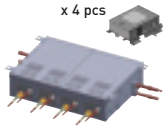

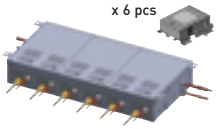

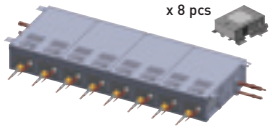

	1 port	4 port	6 port	8 port
56 type	CZ-P56HR3	CZ-P456HR3	CZ-P656HR3	CZ-P856HR3
160 type	CZ-P160HR3	CZ-P4160HR3	—	—

Solenoid valve kit / wiring work

Current model / single connection type.

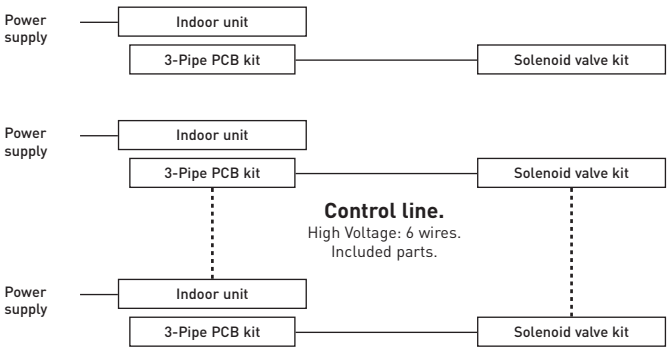

New model / multiple connection type.

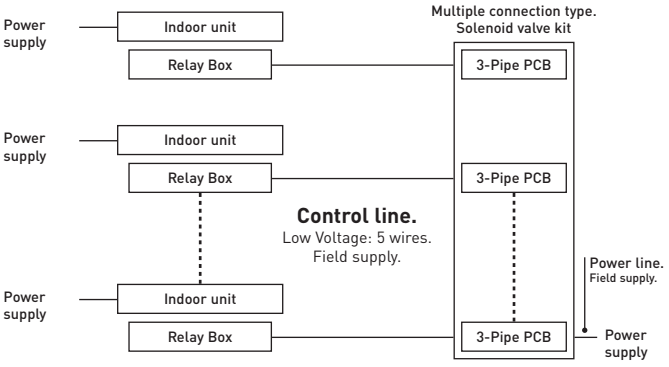

3-Pipe PCB kit.
Separately purchased.

Parts included in HR3 kit.

Signal Relay Box.
Included accessory.

Parts included in HR3 kit.

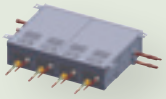

3-Pipe ECOi EX MF3 Series
Superior Flexibility

Increased piping lengths and design flexibility

Adaptable to various building types and sizes. Actual piping length: 200 m. Maximum piping length: 500 m.

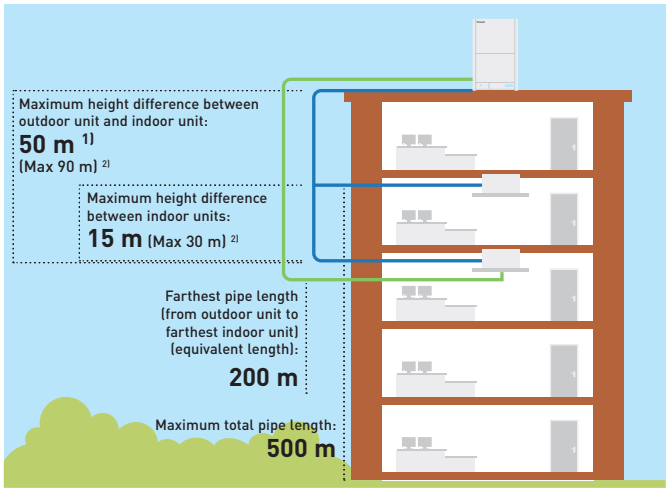

1) 40 m if the outdoor unit is below the indoor unit.
2) Setting change is necessary. Please contact an authorized Panasonic dealer in the case of conditions below:
50 < Height difference between OU and IU ≤ 90 or 15 < Height difference between IUs ≤ 30.

Up to 40 m piping after first branch

Up to 52 units can be connected to one system. Flexible piping layout makes it easier to design systems for locations such as train stations, airports, schools and hospitals.

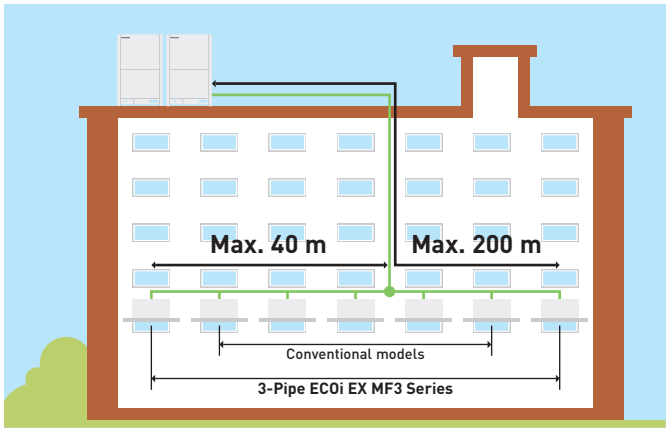

Excellent cost saving and smaller piping size

By using R410A with low pressure loss, pipe sizes for discharge, suction and liquid are all reduced.
This makes it possible to aim for reduced piping space, improved workability at the site, and reduction of the piping material costs.

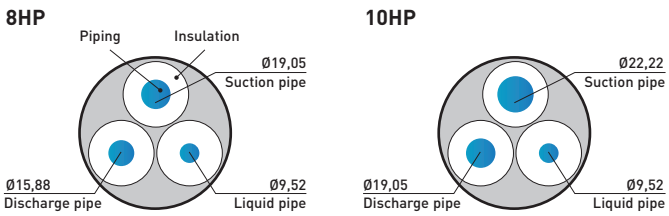

High external static pressure on condensers

With a newly designed fan, fan guard, motor, and casing, new models can be custom-installed on-site to provide up to 80 Pa of external static pressure.

An air discharge duct prevents shortages of air circulation, allowing outdoor units to be installed on every floor of a building.

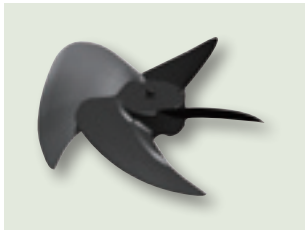

Fan.

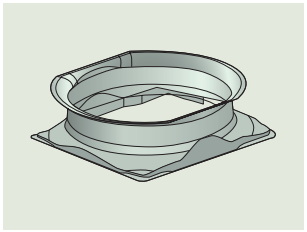

Fan motor and casing.

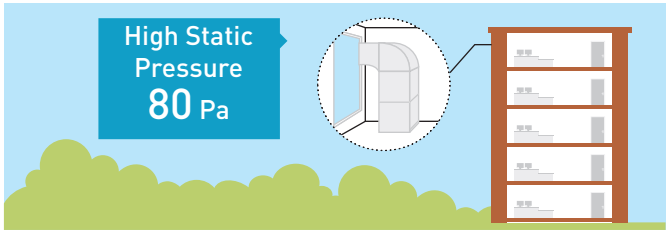

3-Pipe ECOi EX MF3 Series
Piping Design

Select the installation location so that the length and size of refrigerant tubing are within the allowable range shown in the figure below.

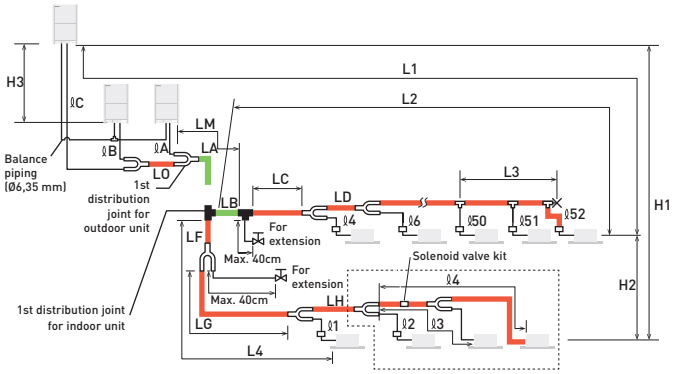

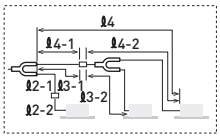

Main piping length (maximum piping size) LM= LA + LB ...

Main distribution tubes LC – LH are selected according to the capacity after the distribution joint.

Sizes of indoor unit connection piping ℓ1 – ℓ52 are determined by the connection piping sizes on the indoor units.

Distribution joint (CZ: optional parts).

T-joint (field supply).

Ball valve (field supply).

Solidly welded shut (pinch weld).

The outdoor connection main piping (LO portion) is determined by the total capacity of the outdoor units that are connected to the tube ends.
Note: Be sure to use special R410A distribution joints (CZ: optional parts) for outdoor unit connections and piping branches.

R410A distribution joint.
CZ-P680PJ2BM (for outdoor unit)
CZ-P1350PJ2BM (for outdoor unit)
CZ-P224BH2BM (for indoor unit)
CZ-P680BH2BM (for indoor unit)
CZ-P1350BH2BM (for indoor unit)

Ranges that apply to refrigerant piping lengths and to differences in installation heights

Items	Mark	Contents		Length (m)
Allowable piping length	L1	Maximum piping length	Actual length	≤200[1]
			Equivalent length	≤210[1]
	Δ L (L2-L4)	Difference between maximum length and minimum length from the 1st distribution joint		≤50[2]
	LM	Maximum length of main piping (at maximum size) *** Even after 1st distribution joint, LM is allowed if at maximum piping length.**		—[3]
	ℓ1, ℓ2~ ℓ52	Maximum length of each distribution tube		≤50[4]
	L1+ ℓ1+ ℓ2~ ℓ51+ ℓA+ℓB+LF+LG+LH	Total maximum piping length including length of each distribution tube (only liquid piping)		≤500
	ℓA, ℓB+LO, ℓC+LO	Maximum piping length from outdoor's 1st distribution joint to each outdoor unit		≤10
	ℓ1-2, ℓ2-2 ~ ℓ52-2	Maximum length between solenoid valve kit and indoor unit		≤30
Allowable elevation difference	H1	When outdoor unit is installed higher than indoor unit		≤50
		When outdoor unit is installed lower than indoor unit		≤40
	H2	Maximum difference between indoor units		≤15[5]
	H3	Maximum difference between outdoor units		≤4
Allowable length of joint piping	L3	T-joint piping (field-supply); Maximum piping length between the first T-joint and solidly welded-shut end point		≤2

L = Length, H = Height

1) If the longest piping length (L1) exceeds 90 m (equivalent length), increase the sizes of the main pipes (LM) by 1 rank for suction pipes, discharge pipes and liquid pipes. Use a field supply reducer. Select the pipe size from the table of main piping sizes (Table 3) and from the table of refrigerant piping sizes (Table 8). 2) If the longest main piping length (LM) exceeds 50 m, increase the main piping size at the portion before 50 m by 1 rank for the suction pipes and discharge pipes. Use a field supply reducer. Determine the length less than the limitation of allowable maximum piping length. For the portion that exceeds 50 m, set based on the main piping size (LA) listed in Table 3. 3) If the piping length marksd "L" (L2-L4) exceeds 40 m, increase the piping size at the portion after the 1st distribution joint by 1 rank for the liquid pipe, suction pipe and discharge pipe. Refer to the Technical Data for the details. 4) If any of the piping length exceeds 30 m, increase the size of the suction pipes,discharge pipes and liquid pipes by 1rank.
* The outdoor connection main piping (LO portion) is determined by the total capacity of the outdoor units that are connected to the pipe ends.

System limitations.

Maximum number allowable connected outdoor units	3
Maximum capacity allowable connected outdoor units	135 kW (48 HP)
Maximum connectable indoor units	52
Maximum allowable indoor / outdoor capacity ratio	50-150 %

1) In the case of 24 HP (type 68 kW) or smaller units, the number is limited by the total capacity of the connected indoor units.
2) Up to 3 units can be connected if the system has been extended.
3) It is strongly recommended that you choose the unit so the load can become between 50 and 130 %.

Additional refrigerant charge.

Liquid piping size Inch (mm)	Amount of refrigerant charge/m (g/m)
1/4 (6,35)	26
3/8 (9,52)	56
1/2 (12,70)	128
5/8 (15,88)	185
3/4 (19,05)	259
7/8 (22,22)	366

Necessary amount of additional refrigerant charge per meter, according to discharge piping size.

Discharge piping size	Inch (mm)	1/2 (12,70)	5/8 (15,88)	3/4 (19,05)	7/8 (22,22)	1 (25,40)	1-1/8 (28,58)	1-1/4 (31,75)	1-1/2 (38,10)
Additional amount	g/m	12	21	31	41	55	71	89	126

Refrigerant piping.

Piping size (mm)											
Material Temper - O						Material Temper - 1/2 H, H					
Ø6,35	t 0,8	Ø12,70	t 0,8	Ø19,05	t 1,2	Ø22,22	t 1,0	Ø28,58	t 1,0	Ø38,10	t 1,15
Ø9,52	t 0,8	Ø15,88	t 1,0			Ø25,40	t 1,0	Ø31,75	t 1,1	Ø41,28	t 1,20

* When bending the tubes, use a bending radius that is at least 4 times the outer diameter of the tubes. In addition, take sufficient care to avoid crushing or damaging the tubes when bending them.

3-Pipe ECOi EX MF3 Series

4,9 SCOP

Simultaneous heating and cooling operation with heat recovery type

The 3-Pipe ECOi EX MF3 Series is one of the most advanced VRF systems. Not only high-efficient performance for simultaneous heating and cooling, but also sophisticated installation and maintenance available.

- Achieving SCOP 4,8 as the top class in the industry (LOT21 Seasonal heating efficiency value for 8 HP outdoor unit)
- Simultaneous cooling and heating operation with up to 39 indoor units
- Slim heat recovery boxes with just 200 mm height fit with the ceiling space limited in hotel applications
- Rotation operation function and back-up operation function provided

Technical focus

- High SEER/SCOP at full Load capacity (Follows LOT21)
- EER, COP: Eurovent certified
- Standardisation of outdoor unit to one compact casing size
- The constant-speed compressor adopts a high-performance internal high-pressure scroll
- Up to 52 indoor units connectable
- High external static pressure 80 Pa with a newly designed fan, fan guard, motor, and casing
- Silent outdoor unit operation: Minimum 54dB(A) for 8 HP
- Bluefin condenser outdoor unit

			8 HP	10 HP	12 HP	14 HP	16 HP
Outdoor Units			**U-8MF3E8**	**U-10MF3E8**	**U-12MF3E8**	**U-14MF3E8**	**U-16MF3E8**
Power supply	Voltage	V	380/400/415	380/400/415	380/400/415	380/400/415	380/400/415
	Phase		Three Phase	Three Phase	Three Phase	Three Phase	Three Phase
	Frequency	Hz	50	50	50	50	50
Cooling capacity		kW	22,4	28,0	33,5	40,0	45,0
EER [1]		W/W	5,11	4,72	3,91	3,70	3,49
SEER [2]			**7,0**	**7,1**	**6,4**	**6,7**	**6,0**
Running current cooling		A	7,16/6,80/6,55	9,90/9,41/9,07	3,19/13,20/12,70	18,20/17,30/16,70	21,30/20,20/19,50
Input power cooling		kW	4,38	5,93	8,57	10,80	12,90
Heating capacity		kW	25,0	31,5	37,5	45,0	50,0
COP [1]		W/W	5,25	5,17	4,51	4,21	4,17
SCOP [2]			**4,9**	**4,3**	**4,3**	**4,1**	**3,8**
Running current heating		A	7,78/7,39/7,12	10,20/9,66/9,31	13,40/12,80/12,30	18,10/17,20/16,50	20,00/19,00/18,30
Input power heating		kW	4,76	6,09	8,32	10,70	12,00
Starting current		A	1,00	1,00	1,00	2,00	2,00
External static pressure (Max)		Pa	80	80	80	80	80
Air volume		m^3/min	210	220	232	232	232
Sound pressure	Normal mode	dB(A)	54,00	57,00	60,00	61,00	62,00
	Silent mode 1 / 2	dB(A)	51,00/49,00	54,00/52,00	57,00/55,00	58,00/56,00	59,00/57,00
Sound power	Normal mode	dB	76,00	78,00	81,00	82,00	82,00
Dimension	H x W x D	mm	1842 x 1180 x 1000	1842 x 1180 x 1000	1842 x 1180 x 1000	1842 x 1180 x 1000	1842 x 1180 x 1000
Net weight		kg	261	262	286	334	334
Piping connections [3]	Liquid pipe	Inch (mm)	3/8 (9,52) / 1/2 (12,70)	3/8 (9,52) / 1/2 (12,70)	1/2 (12,70) / 5/8 (15,88)	1/2 (12,70) / 5/8 (15,88)	1/2 (12,70) / 5/8 (15,88)
	Discharge pipe	Inch (mm)	5/8 (15,88) / 3/4 (19,05)	3/4 (19,05) / 7/8 (22,22)	3/4 (19,05) / 7/8 (22,22)	7/8 (22,22) / 1 (25,40)	7/8 (22,22) / 1 (25,40)
	Suction pipe	Inch (mm)	3/4 (19,05) / 7/8 (22,22)	7/8 (22,22) / 1 (25,40)	1 (25,40) / 1-1/8 (28,58)	1 (25,40) / 1-1/8 (28,58)	1-1/8 (28,58) / 1-1/4 (31,75)
	Balance pipe	Inch (mm)	1/4 (6,35)	1/4 (6,35)	1/4 (6,35)	1/4 (6,35)	1/4 (6,35)
Refrigerant (R410A) / CO_2 Eq.		kg / T	6,80/14,1984	6,80/14,1984	8,30/17,3304	8,30/17,3304	8,30/17,3304
Maximum allowable indoor / outdoor capacity ratio %			50 ~ 150	50 ~ 150	50 ~ 150	50 ~ 150	50 ~ 150
Operating range	Cool Min ~ Max	°C	-10 ~ +52	-10 ~ +52	-10 ~ +52	-10 ~ +52	-10 ~ +52
	Heat Min ~ Max	°C	-20 ~ +18	-20 ~ +18	-20 ~ +18	-20 ~ +18	-20 ~ +18
	Simultaneous op.	°C	-10 ~ +24	-10 ~ +24	-10 ~ +24	-10 ~ +24	-10 ~ +24

Solenoid valve kit		
	KIT-P56HR3	3-Pipe control Solenoid valve kit (up to 5,6 kW)
KIT-P56HR3	**CZ-P56HR3**	Solenoid valve kit (up to 5,6 kW)
	CZ-CAPE2	3-Pipe control PCB
	KIT-P160HR3	3-Pipe control Solenoid valve kit (from 5,6 to 16,0 kW)
KIT-P160HR3	**CZ-P160HR3**	Solenoid valve kit (up to 16,0 kW)
	CZ-CAPE2	3-Pipe control PCB
CZ-CAPEK2 [4]		3-Pipe control PCB for Wall-mounted

3-Pipe control box kit	
CZ-P456HR3	4 ports 3 pipe box (up to 5,6 kW per port)
CZ-P656HR3	6 ports 3 pipe box (up to 5,6 kW per port)
CZ-P856HR3	8 ports 3 pipe box (up to 5,6 kW per port)
CZ-P4160HR3	4 ports 3 pipe box (up to 16,0 kW per port)

1) EER and COP calculation is based in accordance to EN14511. 2) SEER/SCOP is calculated based on the seasonal space cooling/heating efficiency "η" values of the COMMISSION REGULATION (EU) 2016/2281. SEER, SCOP = (η + Correction) × PEF. 3) Pipe diameter under 90 m for ultimate indoor unit / over 90 m for ultimate indoor unit (if the longest piping equivalent length exceeds 90 m, increase the sizes of the main tubes by 1 rank for gas tubes and liquid tubes). 4) Available for S-45/56/73/106MK2E5A.

HIGH COP | INVERTER+ | -20°C HEATING MODE | 5 YEARS COMPRESSOR WARRANTY

3-Pipe ECOi EX MF3 Series combination from 18 to 48 HP

HP			18 HP	20 HP	22 HP	24 HP	26 HP	28 HP	30 HP	32 HP
Model name			U-8MF3E8 U-10MF3E8	U-8MF3E8 U-12MF3E8	U-10MF3E8 U-12MF3E8	U-12MF3E8 U-12MF3E8	U-10MF3E8 U-16MF3E8	U-12MF3E8 U-16MF3E8	U-14MF3E8 U-16MF3E8	U-16MF3E8 U-16MF3E8
Power supply	Voltage	V	380/400/415	380/400/415	380/400/415	380/400/415	380/400/415	380/400/415	380/400/415	380/400/415
	Phase		Three Phase	Three Phase	Three Phase	Three Phase	Three Phase	Three Phase	Three Phase	Three Phase
	Frequency	Hz	50	50	50	50	50	50	50	50
Cooling capacity		kW	50,0	56,0	61,5	68,0	73,0	78,5	85,0	90,0
EER [1]		W/W	4,90	4,31	4,24	3,89	3,88	3,65	3,59	3,49
Running current cooling		A	16,80/16,00/15,40	21,00/20,00/19,20	23,70/22,50/21,70	28,30/26,90/25,90	31,00/29,50/28,40	35,10/33,40/32,20	39,60/37,60/36,20	42,60/40,50/39,00
Input power cooling		kW	10,20	13,00	14,50	17,50	18,80	21,50	23,70	25,8
Heating capacity		kW	56,0	63,0	69,0	76,5	81,5	87,5	95,0	100,0
COP [1]		W/W	5,23	4,77	4,79	4,47	4,50	4,31	4,19	4,17
Running current heating		A	17,70/16,80/16,20	21,30/20,30/19,50	23,50/22,30/21,50	27,60/26,30/25,30	30,20/28,70/27,70	33,50/31,80/30,70	37,90/36,00/34,70	40,10/38,10/36,70
Input power heating		kW	10,70	13,20	14,40	17,10	18,10	20,30	22,70	24,00
Starting current		A	2,00	2,00	2,00	2,00	3,00	3,00	4,00	4,00
External static pressure (Max)		Pa	80	80	80	80	80	80	80	80
Air volume		m³/min	430	442	452	464	452	464	464	464
Sound pressure	Normal mode	dB(A)	59,00	61,00	62,00	63,00	63,50	64,50	64,50	65,00
	Silent mode 1 / 2	dB(A)	56,00/54,00	58,00/56,00	59,00/57,00	60,00/58,00	60,50/58,50	61,50/59,50	61,50/59,50	62,00/60,00
Sound power	Normal mode	dB	81,50	84,00	84,50	86,00	84,50	86,00	86,00	86,00
Dimension	H x W x D	mm	1842 x 2360 (+60) x 1000	1842 x 2360 (+60) x 1000	1842 x 2360 (+60) x 1000	1842 x 2360 (+60) x 1000	1842 x 2360 (+60) x 1000	1842 x 2360 (+60) x 1000	1842 x 2360 (+60) x 1000	1842 x 2360 (+60) x 1000
Net weight		kg	523	547	548	574	596	620	668	668
Piping connections [2]	Liquid pipe	Inch (mm)	5/8 (15,88) / 3/4 (19,05)	5/8 (15,88) / 3/4 (19,05)	5/8 (15,88) / 3/4 (19,05)	5/8 (15,88) / 3/4 (19,05)	3/4 (19,05) / 7/8 (22,22)	3/4 (19,05) / 7/8 (22,22)	3/4 (19,05) / 7/8 (22,22)	3/4 (19,05) / 7/8 (22,22)
	Discharge pipe	Inch (mm)	7/8 (22,22) / 1 (25,40)	7/8 (22,22) / 1 (25,40)	1 (25,40) / 1-1/8 (28,58)	1 (25,40) / 1-1/8 (28,58)	1 (25,40) / 1-1/8 (28,58)	1-1/8 (28,58) / 1-1/4 (31,75)	1-1/8 (28,58) / 1-1/4 (31,75)	1-1/8 (28,58) / 1-1/4 (31,75)
	Suction pipe	Inch (mm)	1-1/8 (28,58) / 1-1/4 (31,75)	1-1/8 (28,58) / 1-1/4 (31,75)	1-1/8 (28,58) / 1-1/4 (31,75)	1-1/8 (28,58) / 1-1/4 (31,75)	1-1/4 (31,75) / 1-1/2 (38,10)	1-1/4 (31,75) / 1-1/2 (38,10)	1-1/4 (31,75) / 1-1/2 (38,10)	1-1/4 (31,75) / 1-1/2 (38,10)
	Balance pipe	Inch (mm)	1/4 (6,35)	1/4 (6,35)	1/4 (6,35)	1/4 (6,35)	1/4 (6,35)	1/4 (6,35)	1/4 (6,35)	1/4 (6,35)
Refrigerant (R410A) / CO_2 Eq.		kg / T	13,60/28,3968	15,10/31,5288	15,10/31,5288	16,60/34,6608	15,10/31,5288	16,60/34,6608	16,60/34,6608	16,60/34,6608
Maximum allowable indoor / outdoor capacity ratio %			50 ~ 150	50 ~ 150	50 ~ 150	50 ~ 150	50 ~ 150	50 ~ 150	50 ~ 150	50 ~ 150
Operating range	Cool Min ~ Max	°C	-10 ~ +52	-10 ~ +52	-10 ~ +52	-10 ~ +52	-10 ~ +52	-10 ~ +52	-10 ~ +52	-10 ~ +52
	Heat Min ~ Max	°C	-20 ~ +18	-20 ~ +18	-20 ~ +18	-20 ~ +18	-20 ~ +18	-20 ~ +18	-20 ~ +18	-20 ~ +18
	Simultaneous op.	°C	-10 ~ +24	-10 ~ +24	-10 ~ +24	-10 ~ +24	-10 ~ +24	-10 ~ +24	-10 ~ +24	-10 ~ +24

HP			34 HP	36 HP	38 HP	40 HP	42 HP	44 HP	46 HP	48 HP
Model name			U-8MF3E8 U-10MF3E8 U-16MF3E8	U-8MF3E8 U-12MF3E8 U-16MF3E8	U-10MF3E8 U-12MF3E8 U-16MF3E8	U-8MF3E8 U-16MF3E8 U-16MF3E8	U-10MF3E8 U-16MF3E8 U-16MF3E8	U-12MF3E8 U-16MF3E8 U-16MF3E8	U-14MF3E8 U-16MF3E8 U-16MF3E8	U-16MF3E8 U-16MF3E8 U-16MF3E8
Power supply	Voltage	V	380/400/415	380/400/415	380/400/415	380/400/415	380/400/415	380/400/415	380/400/415	380/400/415
	Phase		Three Phase	Three Phase	Three Phase	Three Phase	Three Phase	Three Phase	Three Phase	Three Phase
	Frequency	Hz	50	50	50	50	50	50	50	50
Cooling capacity		kW	96,0	101,0	107,0	113,0	118,0	124,0	130,0	135,0
EER [1]		W/W	4,10	3,90	3,88	3,72	3,72	3,58	3,55	3,49
Running current cooling		A	38,60/36,70/35,40	42,30/40,20/38,70	45,60/43,30/41,70	50,20/47,70/46,00	52,40/49,70/47,90	56,50/53,70/51,80	61,10/58,10/56,00	63,90/60,70/58,50
Input power cooling		kW	23,40	25,90	27,60	30,40	31,70	34,60	36,60	38,70
Heating capacity		kW	108,0	113,0	119,0	127,0	132,0	138,0	145,0	150,0
COP [1]		W/W	4,64	4,48	4,51	4,31	4,36	4,25	4,18	4,17
Running current heating		A	38,90/37,00/35,60	41,60/39,50/38,10	43,60/41,40/39,90	49,30/46,80/45,10	50,60/48,10/46,30	53,70/51,00/49,10	57,90/55,00/53,00	60,10/57,10/55,00
Input power heating		kW	23,30	25,20	26,40	29,50	30,30	32,50	34,70	36,00
Starting current		A	4,00	4,00	4,00	5,00	5,00	5,00	6,00	6,00
External static pressure (Max)		Pa	80	80	80	80	80	80	80	80
Air volume		m³/min	662	674	684	674	684	696	696	696
Sound pressure	Normal mode	dB(A)	64,00	64,50	65,00	65,50	66,00	66,50	66,50	67,00
	Silent mode 1 / 2	dB(A)	61,00/59,00	61,50/59,50	62,00/60,00	62,50/60,50	63,00/61,00	63,50/61,50	63,50/61,50	64,00/62,00
Sound power	Normal mode	dB	84,50	85,50	85,50	85,50	86,00	86,50	87,00	87,00
Dimension	H x W x D	mm	1842 x 3540 (+120) x 1000	1842 x 3540 (+120) x 1000	1842 x 3540 (+120) x 1000	1842 x 3540 (+120) x 1000	1842 x 3540 (+120) x 1000	1842 x 3540 (+120) x 1000	1842 x 3540 (+120) x 1000	1842 x 3540 (+120) x 1000
Net weight		kg	857	881	882	929	930	954	1002	1002
Piping connections [3]	Liquid pipe	Inch (mm)	3/4 (19,05) / 7/8 (22,22)	3/4 (19,05) / 7/8 (22,22)	3/4 (19,05) / 7/8 (22,22)	3/4 (19,05) / 7/8 (22,22)	3/4 (19,05) / 7/8 (22,22)	3/4 (19,05) / 7/8 (22,22)	3/4 (19,05) / 7/8 (22,22)	3/4 (19,05) / 7/8 (22,22)
	Discharge pipe	Inch (mm)	1-1/8 (28,58) / 1-1/4 (31,75)	1-1/8 (28,58) / 1-1/4 (31,75)	1-1/4 (31,75) / 1-1/2 (38,10)	1-1/4 (31,75) / 1-1/2 (38,10)	1-1/4 (31,75) / 1-1/2 (38,10)	1-1/4 (31,75) / 1-1/2 (38,10)	1-1/4 (31,75) / 1-1/2 (38,10)	1-1/4 (31,75) / 1-1/2 (38,10)
	Suction pipe	Inch (mm)	1-1/4 (31,75) / 1-1/2 (38,10)	1-1/2 (38,10) / 1-5/8 (41,28)	1-1/2 (38,10) / 1-5/8 (41,28)	1-1/2 (38,10) / 1-5/8 (41,28)	1-1/2 (38,10) / 1-5/8 (41,28)	1-1/2 (38,10) / 1-5/8 (41,28)	1-1/2 (38,10) / 1-5/8 (41,28)	1-1/2 (38,10) / 1-5/8 (41,28)
	Balance pipe	Inch (mm)	1/4 (6,35)	1/4 (6,35)	1/4 (6,35)	1/4 (6,35)	1/4 (6,35)	1/4 (6,35)	1/4 (6,35)	1/4 (6,35)
Refrigerant (R410A) / CO_2 Eq.		kg / T	21,90/45,72719	23,40/48,85919	23,40/48,85919	23,40/48,85919	23,40/48,85919	24,90/46,3536	24,90/51,9912	24,90/51,9912
Maximum allowable indoor / outdoor capacity ratio %			50 ~ 150	50 ~ 150	50 ~ 150	50 ~ 150	50 ~ 150	50 ~ 150	50 ~ 150	50 ~ 150
Operating range	Cool Min ~ Max	°C	-10 ~ +52	-10 ~ +52	-10 ~ +52	-10 ~ +52	-10 ~ +52	-10 ~ +52	-10 ~ +52	-10 ~ +52
	Heat Min ~ Max	°C	-20 ~ +18	-20 ~ +18	-20 ~ +18	-20 ~ +18	-20 ~ +18	-20 ~ +18	-20 ~ +18	-20 ~ +18
	Simultaneous op.	°C	-10 ~ +24	-10 ~ +24	-10 ~ +24	-10 ~ +24	-10 ~ +24	-10 ~ +24	-10 ~ +24	-10 ~ +24

Rating Conditions: Cooling Indoor 27 °C DB / 19 °C WB. Cooling Outdoor 35 °C DB / 24 °C WB. Heating Indoor 20 °C DB. Heating Outdoor 7 °C DB / 6 °C WB. (DB: Dry Bulb; WB: Wet Bulb).
Specifications subject to change without notice. For detailed information about ErP / Energy Labelling, please visit our websites www.aircon.panasonic.eu or www.ptc.panasonic.eu.

Eurovent certified technical data

Panasonic's VRF systems - ECOi range is now certified by Eurovent*

The Eurovent certification verifies the performance ratings of heating and cooling systems following European standards. Those data provides products efficiency with full transparency for the benefit of customers and professionals.

Eurovent certified technical data: Mini ECOi LE Series 4 to 10 HP

HP			4 HP				5 HP				6 HP				8 HP		10 HP	
Outdoor units			U-4LE2E5		U-4LE2E8		U-5LE2E5		U-5LE2E8		U-6LE2E5		U-6LE2E8		U-8LE1E8		U-10LE1E8	
Indoor units combination			MF2	MU2	MF2	MU2	MF2	MU2	MF2	MU2	MF2	MU2	MF2	MU2	MF2	MU2	MF2	MU2
Cooling	Pc out [1]	kW	12,1	12,1	12,1	12,1	14	14	14	14	15,5	15,5	15,5	15,5	22,4	22,4	28	28
	Pec out [2]	kW	2,88	2,88	2,88	2,88	3,68	3,68	3,68	3,68	4,56	4,56	4,56	4,56	7,23	7,23	10,77	10,77
	EERout		4,2	4,2	4,2	4,2	3,8	3,8	3,8	3,8	3,4	3,4	3,4	3,4	3,1	3,1	2,6	2,6
Seasonal Cooling	SEER		7,8	7,8	7,8	7,8	7,5	7,5	7,5	7,5	7,2	7,2	7,2	7,2	6,3	6,3	6,4	6,4
	ηsc	%	311	311	311	311	296,2	296,2	296,2	296,2	286,8	286,8	286,8	286,8	247,9	247,9	251,8	251,8
Cooling PL Condition B	PcB	kW	8,9	8,9	8,9	8,9	10,3	10,3	10,3	10,3	11,4	11,4	11,4	11,4	16,5	16,5	20,6	20,6
	EERB		6,7	6,7	6,7	6,7	5,9	5,9	5,9	5,9	5,4	5,4	5,4	5,4	4,8	4,8	4,4	4,4
Cooling PL Condition C	PcC	kW	5,7	5,7	5,7	5,7	6,6	6,6	6,6	6,6	7,3	7,3	7,3	7,3	10,6	10,6	13,2	13,2
	EERC		12,1	12,1	12,1	12,1	11	11	11	11	10,2	10,2	10,2	10,2	7,8	7,8	8,2	8,2
Cooling PL Condition D	PcD	kW	2,7	2,7	2,7	2,7	2,9	2,9	2,9	2,9	3,4	3,4	3,4	3,4	8	8	9	9
	EERD		9,6	9,6	9,6	9,6	10,3	10,3	10,3	10,3	11,7	11,7	11,7	11,7	12,8	12,8	15,4	15,4
Seasonal Heating	Pdesignh	kW	10	10	10	10	12,5	12,5	12,5	12,5	13	13	13	13	17,5	17,5	19,6	19,6
	SCOP		4,9	4,9	4,9	4,9	4,4	4,4	4,4	4,4	4,2	4,2	4,2	4,2	4,2	4,2	4,3	4,3
	ηsc	%	191,8	191,8	191,8	191,8	172,9	172,9	172,9	172,9	166,7	166,7	166,7	166,7	166,4	166,4	169,5	169,5
Heating PL Condition A	PhA	kW	8,8	8,8	8,8	8,8	11	11	11	11	11,5	11,5	11,5	11,5	15,4	15,4	17,3	17,3
	COPA		3,5	3,5	3,5	3,5	2,8	2,8	2,8	2,8	2,6	2,6	2,6	2,6	2,7	2,7	2,6	2,6
Heating PL Condition B	PhB	kW	5,3	5,3	5,3	5,3	6,7	6,7	6,7	6,7	7	7	7	7	9,4	9,4	10,5	10,5
	COPB		4,1	4,1	4,1	4,1	3,7	3,7	3,7	3,7	3,6	3,6	3,6	3,6	3,8	3,8	3,9	3,9
Heating PL Condition C	PhC	kW	3,4	3,4	3,4	3,4	4,3	4,3	4,3	4,3	4,5	4,5	4,5	4,5	6	6	6,7	6,7
	COPC		7,7	7,7	7,7	7,7	7,5	7,5	7,5	7,5	7,4	7,4	7,4	7,4	6,6	6,6	6,8	6,8
Heating PL Condition D	PhD	kW	4,4	4,4	4,4	4,4	4,4	4,4	4,4	4,4	4,4	4,4	4,4	4,4	6,4	6,4	6,6	6,6
	COPD		9,8	9,8	9,8	9,8	9,8	9,8	9,8	9,8	9,8	9,8	9,8	9,8	8,1	8,1	8,9	8,9
T bivalent	Tbiv	°C	-10	-10	-10	-10	-9	-9	-9	-9	-7	-7	-7	-7	-7	-7	-7	-7
	PhTbiv	kW	10	10	10	10	12	12	12	12	11,5	11,5	11,5	11,5	15,4	15,4	17,3	17,3
	COPTbiv		2,9	2,9	2,9	2,9	2,6	2,6	2,6	2,6	2,6	2,6	2,6	2,6	2,7	2,7	2,6	2,6
Psbc		W	9	9	9	9	9	9	9	9	9	9	9	9	18	18	18	18
Psbh		W	33	33	33	33	33	33	33	33	33	33	33	33	48	48	48	48
Poffc		W	9	9	9	9	9	9	9	9	9	9	9	9	18	18	18	18
Poffh		W	33	33	33	33	33	33	33	33	33	33	33	33	48	48	48	48
Ptoc		W	33	33	33	33	33	33	33	33	33	33	33	33	48	48	48	48
Ptoh		W	33	33	33	33	33	33	33	33	33	33	33	33	48	48	48	48
Pckc		W	33	33	33	33	33	33	33	33	33	33	33	33	48	48	48	48
Pckh		W	33	33	33	33	33	33	33	33	33	33	33	33	48	48	48	48
PSB		W	33	33	33	33	33	33	33	33	33	33	33	33	48	48	48	48
Sound power level		dB(A)	69	69	69	69	71	71	71	71	73	73	73	73	79	79	83	83
Sound power level in heating		dB(A)	72	72	72	72	75	75	75	75	75	75	75	75	83	83	84	84

1) Pc out= Capacity. 2) Pec out= Input power. * Please refer an official website (https://www.eurovent-certification.com/en) for each test condition.

Eurovent certified technical data: 2-Pipe ECOi EX ME2 Series 8 to 20 HP

HP			8 HP		10 HP		12 HP		14 HP		16 HP		18 HP		20 HP	
Outdoor units			U-8ME2E8		U-10ME2E8		U-12ME2E8		U-14ME2E8		U-16ME2E8		U-18ME2E8		U-20ME2E8	
Indoor units combination			MF2	MU2	MF2	MU2	MF2	MU2	MF2	MU2	MF2	MU2	MF2	MU2	MF2	MU2
Cooling	Pc out [1]	kW	19,7	19,7	24,6	24,6	33,5	33,5	40	40	45	45	50	50	56	56
	Pec out [2]	kW	5,79	5,79	8,79	8,79	11,55	11,55	13,33	13,33	18,75	18,75	17,86	17,86	23,33	23,33
	EERout		3,4	3,4	2,8	2,8	2,9	2,9	3	3	2,4	2,4	2,8	2,8	2,4	2,4
Seasonal Cooling	SEER		7,4	7,4	7	7	6,7	6,7	7,2	7,2	6,4	6,4	7,6	7,6	7	7
	ηsc	%	294,3	294,3	275,4	275,4	266,6	266,6	286	286	254,3	254,3	299,2	299,2	278,2	277
Cooling PL Condition B	PcB	kW	14,5	14,5	18,1	18,1	24,6	24,6	29,4	29,4	33,1	33,1	36,8	36,8	41,2	41,2
	EERB		5,7	5,7	4,8	4,8	4,6	4,6	4,9	4,9	4,2	4,2	5	5	4,6	4,6
Cooling PL Condition C	PcC	kW	9,3	9,3	11,6	11,6	15,8	15,8	18,9	18,9	21,3	21,3	23,6	23,6	26,5	26,5
	EERC		11,8	11,8	9,6	9,6	8,1	8,1	9,4	9,4	8,2	8,2	9,8	9,8	9	9
Cooling PL Condition D	PcD	kW	8,2	8,2	9,3	9,3	8,2	8,2	8,4	8,4	9,4	9,4	10,5	10,5	11,7	11,7
	EERD		13,7	13,7	18,9	18,9	18,4	18,4	22,6	22,6	22,1	22,1	25,2	25,2	24,6	24,6
Seasonal Heating	Pdesignh	kW	17,5	17,5	22	22	26,2	26,2	31,5	31,5	35	35	39,2	39,2	44,1	44,1
	SCOP		4,8	4,8	4,3	4,3	4,7	4,7	4,3	4,3	4,1	4,1	4,3	4,3	4,1	4,1
	ηsc	%	188,4	188,4	167,6	167,6	185,8	185,8	168,2	168,2	159	159	168,7	168,7	160,4	161
Heating PL Condition A	PhA	kW	15,4	15,4	19,4	19,4	23,1	23,1	27,8	27,8	30,9	30,9	34,6	34,6	39	39
	COPA		2,8	2,8	2,6	2,6	2,8	2,8	2,5	2,5	2,3	2,3	2,6	2,6	2,4	2,4
Heating PL Condition B	PhB	kW	9,4	9,4	11,8	11,8	14,1	14,1	16,9	16,9	18,8	18,8	21,1	21,1	23,7	23,7
	COPB		4,5	4,5	3,6	3,6	4,2	4,2	3,7	3,7	3,6	3,6	3,7	3,7	3,5	3,5
Heating PL Condition C	PhC	kW	6	6	7,6	7,6	9	9	10,9	10,9	12,1	12,1	13,5	13,5	15,2	15,2
	COPC		7,2	7,2	7,7	7,7	7,7	7,7	7,4	7,4	6,6	6,6	7,1	7,1	6,9	6,9
Heating PL Condition D	PhD	kW	7,1	7,1	7	7	7,2	7,2	6,7	6,7	6,6	6,6	7,4	7,4	7,4	7,4
	COPD		8,9	8,9	9,6	9,6	9,3	9,3	10,2	10,2	10	10	10,3	10,3	10,3	10,3
T bivalent	Tbiv	°C	-9	-9	-7	-7	-9	-9	-7	-7	-7	-7	-7	-7	-7	-7
	PhTbiv	kW	16,8	16,8	19,4	19,4	25,1	25,1	27,8	27,8	30,9	30,9	34,6	34,6	39	39
	COPTbiv		2,6	2,6	2,6	2,6	2,6	2,6	2,5	2,5	2,3	2,3	2,6	2,6	2,4	2,4
Psbc		W	48	48	48	48	48	48	88	88	88	88	88	88	88	88
Psbh		W	48	48	48	48	48	48	88	88	88	88	88	88	88	88
Poffc		W	48	48	48	48	48	48	88	88	88	88	88	88	88	88
Poffh		W	48	48	48	48	48	48	88	88	88	88	88	88	88	88
Ptoc		W	48	48	48	48	48	48	88	88	88	88	88	88	88	88
Ptoh		W	48	48	48	48	48	48	88	88	88	88	88	88	88	88
Pckc		W	48	48	48	48	48	48	88	88	88	88	88	88	88	88
Pckh		W	48	48	48	48	48	48	88	88	88	88	88	88	88	88
PSB		W	48	48	48	48	48	48	88	88	88	88	88	88	88	88
Sound power level		dB(A)	80	80	81	81	85	85	86	86	87	87	86	86	86	86
Sound power level in heating		dB(A)	81	81	84	84	85	85	85	85	89	89	89	89	89	89

1) Pc out= Capacity. 2) Pec out= Input power. * Please refer an official website (https://www.eurovent-certification.com/en) for each test condition.

Eurovent certified technical data: 3-Pipe ECOi EX MF3 Series 8 to 16 HP

HP			8 HP		10 HP		12 HP		14 HP		16 HP	
Outdoor units			U-8MF3E8		U-10MF3E8		U-12MF3E8		U-14MF3E8		U-16MF3E8	
Indoor units combination			MF2	MU2	MF2	MU2	MF2	MU2	MF2	MU2	MF2	MU2
Cooling	Pc out [1]	kW	22,4	22,4	28	28	33,5	33,5	40	40	45	45
	Pec out [2]	kW	7,23	7,23	10,77	10,77	12,88	12,88	15,38	15,38	19,57	19,57
	EERout		3,1	3,1	2,6	2,6	2,6	2,6	2,6	2,6	2,3	2,3
Seasonal Cooling	SEER		7	7	7	7	6,4	6,4	6,7	6,7	6	6
	ηsc	%	277	277,7	278,9	278,9	252,7	252,7	264,4	264,4	237,7	237,7
Cooling PL Condition B	PcB	kW	16,5	16,5	20,6	20,6	24,6	24,6	29,4	29,4	33,1	33,1
	EERB		4,9	4,9	4,6	4,6	4,3	4,3	4,4	4,4	3,9	3,9
Cooling PL Condition C	PcC	kW	10,6	10,6	13,2	13,2	15,8	15,8	18,9	18,9	21,3	21,3
	EERC		9,1	9,1	9,3	9,3	7,7	7,7	8,3	8,3	7,4	7,4
Cooling PL Condition D	PcD	kW	7,2	7,2	8,5	8,5	7,1	7,1	8,5	8,5	9,4	9,4
	EERD		16,5	16,5	19,7	19,7	15,7	15,7	19,7	19,7	17,4	17,4
Seasonal Heating	Pdesignh	kW	17,5	17,5	22	22	26,2	26,2	31,5	31,5	35	35
	SCOP		4,8	4,8	4,2	4,2	4,3	4,3	4,1	4,1	3,8	3,8
	ηsc	%	189	190,9	166,8	166,8	167,8	167,8	162,1	162,1	149,3	149,3
Heating PL Condition A	PhA	kW	15,4	15,4	19,4	19,4	23,1	23,1	27,8	27,8	30,9	30,9
	COPA		2,9	2,9	2,5	2,5	2,7	2,7	2,4	2,4	2,2	2,2
Heating PL Condition B	PhB	kW	9,4	9,4	11,8	11,8	14,1	14,1	16,9	16,9	18,8	18,8
	COPB		4,6	4,6	3,7	3,7	3,7	3,7	3,6	3,6	3,3	3,3
Heating PL Condition C	PhC	kW	6	6	7,6	7,6	9	9	10,9	10,9	12,1	12,1
	COPC		7,1	7,1	7,4	7,4	6,9	6,9	7,1	7,1	6,5	6,5
Heating PL Condition D	PhD	kW	6,7	6,7	6,9	6,9	6,5	6,5	6,6	6,6	6,6	6,6
	COPD		8,7	8,7	9,4	9,4	9	9	9,6	9,6	9,6	9,6
T bivalent	Tbiv	°C	-9	-9	-7	-7	-9	-9	-7	-7	-7	-7
	PhTbiv	kW	16,8	16,8	19,4	19,4	25,1	25,1	27,8	27,8	30,9	30,9
	COPTbiv		2,6	2,6	2,5	2,5	2,3	2,3	2,4	2,4	2,2	2,2
Psbc		W	17	17	17	17	17	17	25	25	25	25
Psbh		W	50	50	50	50	50	50	91	91	91	91
Poffc		W	17	17	17	17	17	17	25	25	25	25
Poffh		W	50	50	50	50	50	50	91	91	91	91
Ptoc		W	17	17	17	17	17	17	25	25	25	25
Ptoh		W	50	50	50	50	50	50	91	91	91	91
Pckc		W	50	50	50	50	50	50	91	91	91	91
Pckh		W	50	50	50	50	50	50	91	91	91	91
PSB		W	50	50	50	50	50	50	91	91	91	91
Sound power level		dB(A)	79	79	80	80	84	84	86	86	86	86
Sound power level in heating		dB(A)	77	77	82	82	86	86	86	86	88	88

1) Pc out= Capacity. 2) Pec out= Input power. * Please refer an official website (https://www.eurovent-certification.com/en) for each test condition.

ECO G, the gas driven VRF

The advanced Gas Driven VRF system offers increased efficiency and performance across the range.
Improvements include increased part load performance, reduced gas consumption with a Miller-cycle engine and reduced electrical consumption by using DC-Fan motors.

ECO G

1 Limited electric supply

Electric consumption of ECO G is only 9 % compared to ECOi because gas engine is utilized for the compressor driving source.

2 High demand of DHW with heating and cooling cogeneration

DHW is produced effectively thanks to heat from engine exhaust during heating and cooling.

3 Open and flexible design

ECO G system is designed to connect various Indoor units and controllers which is available for ECOi system. With new GE3 Series, Pump Down system has been implemented to answer commercial needs.

4 Quick start up in heating at low ambient temperature

Gas heat pump systems make your building comfortably warm with a quick start by using waste heat from engine.
Heating mode works from -21 °C of ambient temperature.

Comparison of heating capacity.

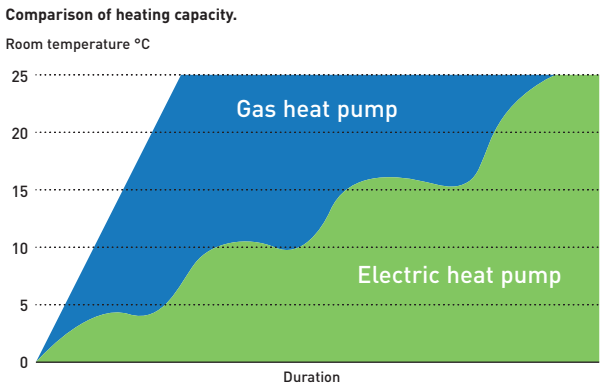

2-Pipe ECO G GE3 Series

Designed for better energy efficiency. SEER has been increased by maximum 120 %.

3-Pipe ECO G GF3 Series

Domestic hot water can be supplied by effectively using waste heat generated by heating & cooling.

GE3/GF3 connectable indoor units

Type	Model number reference	2-Pipe ECO G GE3 Series	3-Pipe ECO G GF3 Series
Standard A2A indoor units	—	Yes [1]	Yes [1]
Water Heat Exchanger	PAW-250/500W(P)5G	Yes [2]	No
High Static Pressure Hide Away	S-ME2E5	Yes	No
Heat Recovery with DX Coil	PAW-ZDX3N	Yes	Yes
Air Curtain with DX Coil	PAW-EAIRC-HS/LS	Yes	Yes [3]
AHU Connection Kit	PAW-MAH2/M/L	Yes	Yes [3]

1) Except for 1,5 kW capacity. 2) Allowed 1:1 and also mixed. If mixed, not operate at the same time WHE + DX only operate separately. 3) Smaller capacity than 16 kW only.

ECO G, the gas driven VRF

200.000
GHP outdoor units were sold in all over the world

ECO G satisfies special requirement for your application and environmentally friendly solution by Panasonic professional technology.

Reliable quality by long development history since 1985.

Our ECO G VRF range of commercial systems is leading the industry in the development of efficient and flexible systems.

1985
Introduces first GHP (Gas Heat Pump) VRF air conditioner.

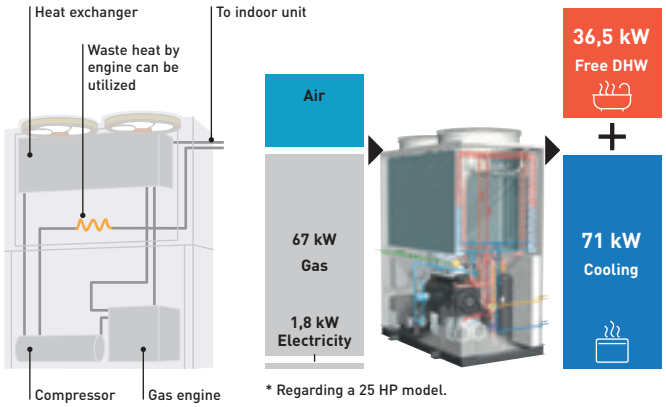

* Regarding a 25 HP model.

What is GHP? The Gas Heat Pump (GHP)

Panasonic Gas Heat Pump is a direct expansion system with compressor as same as VRF system. Gas engine is used as driving source of compressor instead of electric motor. This gas engine compressor drive has 2 advantages:

1. Waste heat from the gas engine available.
2. No need for motor power consumption thanks to gas engine.

GHP is the natural choice for commercial projects, especially for those projects where power restrictions apply.

Power supply problems?

If you are short of electric power, our ECO G is a perfect solution.

- Runs on natural gas or LPG and just needs single phase supply
- Enables the building's electrical power supply to be used for other critical electrical demands
- Reduces capital cost to upgrade power substations to run heating and cooling systems
- Reduces power loadings within a building especially during peak periods
- Electricity supply freed up for other uses such as IT servers, commercial refrigeration, manufacturing, lighting, etc...

Limited electricity area.
Comparison of electrical consumption on a 71 kW outdoor unit.

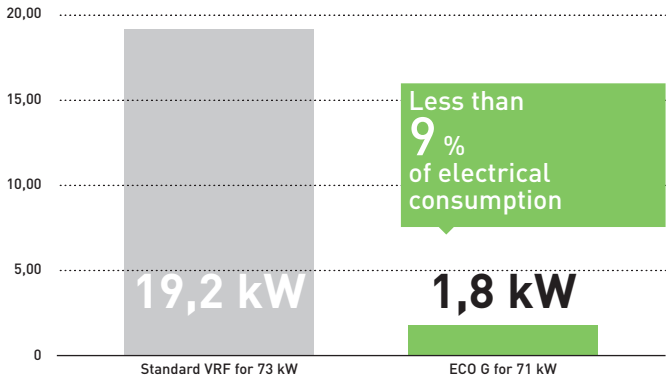

Application example: Hotel.

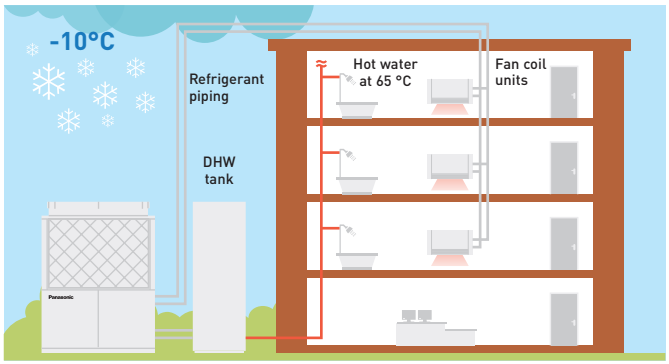

No need additional electric heaters. * This scheme is also valid with WHE.

High demand of Domestic Hot Water in heating and cooling

The rejected heat from the engine is available for DHW production and can supply up to 46 kW of hot water at 65 °C. DHW at 65 °C is also ready to use in heating without additional electric heaters.

Quick start up and great heating capacity at low ambient temperature

Waste heat from gas engine is utilized to raise temperature quicker then electric VRF system.
This contributes great heating capacity at extremely low ambient temperature.

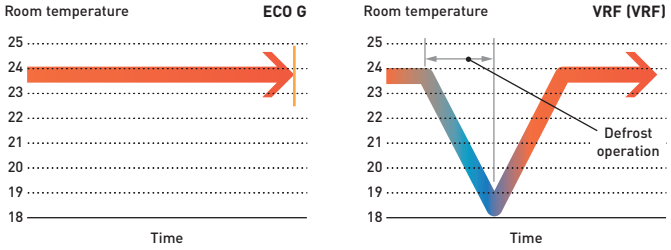

Lowest nitrogen oxide emissions.
The ECO G VRF systems have low nitrogen oxide emissions. In a pioneering development, the Panasonic ECO G features a brand new lean-burn combustion system that utilizes air fuel ratio feedback control to reduce NOx emissions to an all time low.

Water chiller option.
Our ECO G system is also available with a water chiller option, which can be combined with individual outdoor units or as part of a DX chilled water mix of indoor units. The system can be operated via a BMS system or a Panasonic supplied control panel, with chilled water set points from
-15 °C ~ +15 °C and heating set points 35 °C ~ +55 °C.

Application

Application	Condition	ECO G	
Hotel	High DHW demand	✔	Energy recovery of ECO G system can fulfill different requirement
Hotel	Needs to warm up swimming pool		
Office	Quick start up is necessary	✔	Speed of start up is quicker than VRF system
Winery	1) Outlet water demand at specific temperature 2) Needs high amount of power temporary (not every month)	✔	1) Chiller application with hydro module (ECO G + WHE) can make this special process 2) Running cost can be saved since fixed Gas tariff per month is cheaper than fixed electric tariff.
Any building	In a city with power restriction	✔	- No need an additional power transformer - Space and cost can be saved
	At extremely low ambient condition	✔	Heating capacity is kept up to -20 °C without defrost process

Project Case Studies

Savills HQ Dublin & Google Block R. Ireland.
ECO G 3-way units with a 243 kW load. The project has been such a success that it has recently been awarded a Panasonic PRO Award for Best Contribution of efficient projects within Europe.

Thomas Cook's Sunprime Atlantic View resort.
A holiday resort in the Canaries. Spain. 229 rooms plus full spa and swimming pool facility.

CAPITA call centre. UK.
11 ECO G 3-way units. Over 150 indoor units in meeting rooms and open-plan areas. Intelligent touch screen controller, the CZ-256ESMC2.

French winery Gennevilliers, France.
ECO G 3-way units. One of the best solution utilized our ECO G solution for wine production process.

ECO G 3 Series

Improvement in blast efficiency

3-blades fan.
Propeller shape with 3 blades is more efficient
Max. 30 % of fan electrical consumption is saved compared to conventional fan.

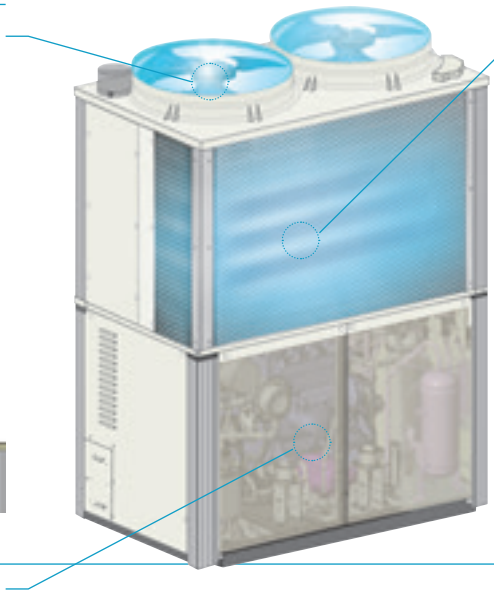

"L" type heat exchanger

Heat exchanger surface area is included by 25 % compared to conventional model to optimize efficiency.

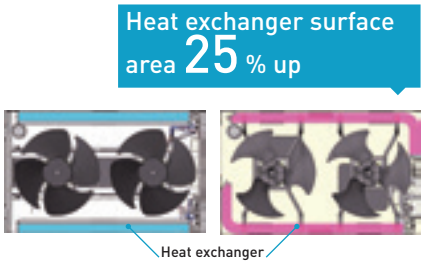

Better partial load control

Reduce start / stop loss has reduced by expanding the are where continuous operation is possible. Annual operation efficiency has further improved by better efficiency at lower partial load.

Compressor.
- Amount of internal leakage has reduced by the reduction of clearance, the compressor efficiency in the low load and low rotation region has been greatly improved. Moreover, efficiency of high speed and high load is also improved by reduction of suction pressure loss due to expansion of suction path
- Optimize compressor capacity

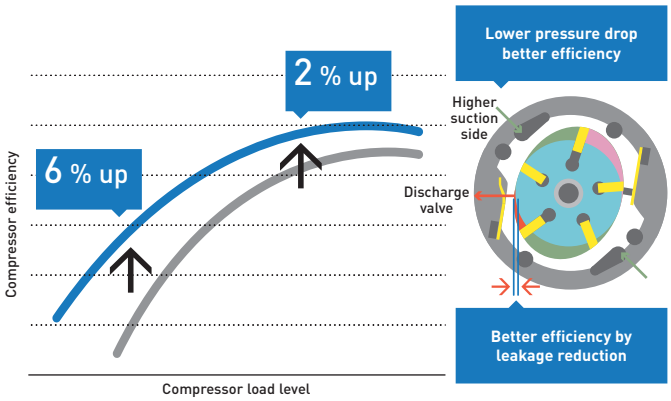

Engine.
- Continuous operation area has expanded at lower partial load by expanding operation area of lower speed
- Engine efficiency has improved by shifting output points to higher torque side

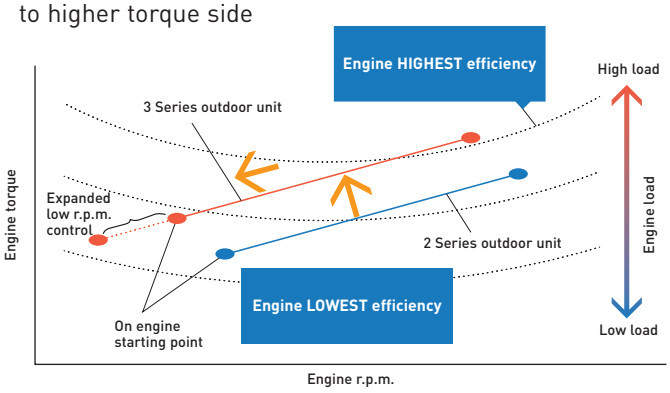

Engine pulley.
- Bigger diameter of engine pulley contributes the optimization of the compressor rotation speed ratio with engine speed

Higher engine pulley diameter giving better performance at partial load and reducing ON/OFF operation.

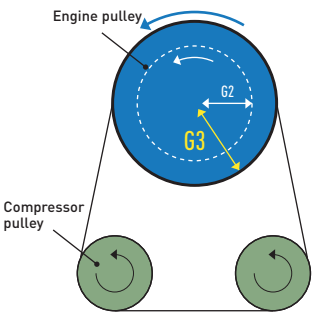

Line up of GE3 2-Pipe W-Multi

- For new or renewal
- Available for water heat exchanger
- Maximum 60 HP combination

Introducing new ECO G 3 Series. Optimized energy saving with reliable Panasonic technologies.

The highest seasonal performance in all capacity ranges

High power efficiency of W-Multi system.
ECO G 3 Series system offers seasonal efficiency which has been drastically improved with new heat exchanger design, blast efficiency, partial load control.

Compared to conventional model ECO G 2 Series.
All models are newly developed and have maximum 25 % of SEER, 15 % of SCOP better than conventional model.

2-Pipe ECO G GE3 Series. SEER / SCOP

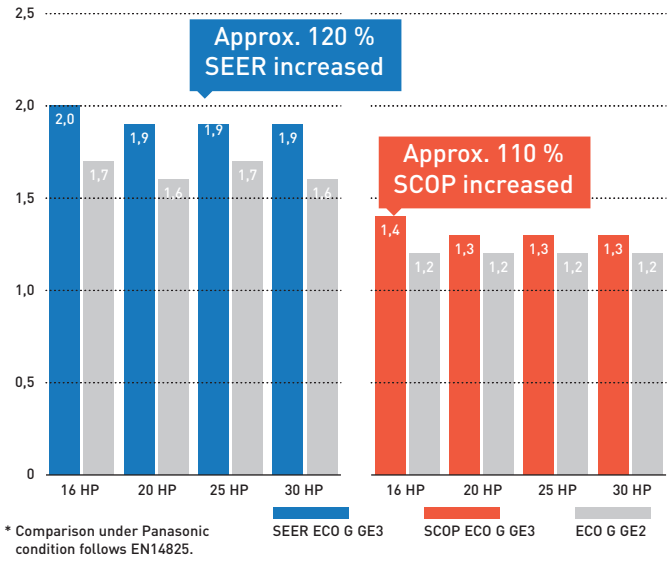

* Comparison under Panasonic condition follows EN14825.

3-Pipe ECO G GF3 Series. SEER / SCOP

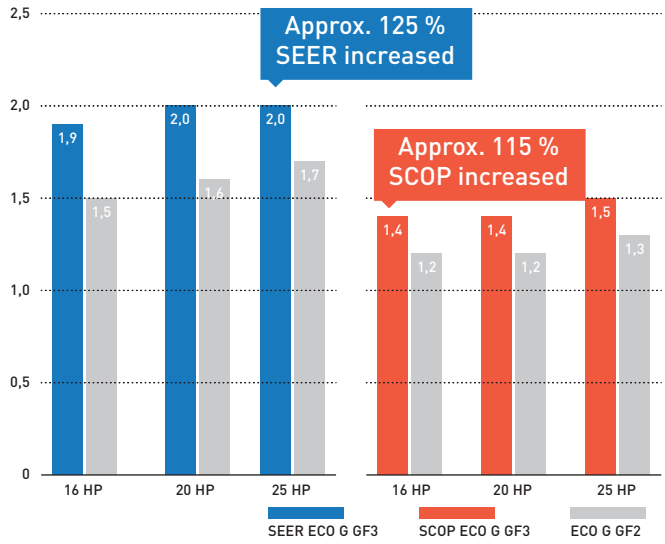

Heating design operation conditions (GE3)

Operating range in heating has been expanded up to 24 °C (WB) for air to water system to meet the demand of swimming pool application.

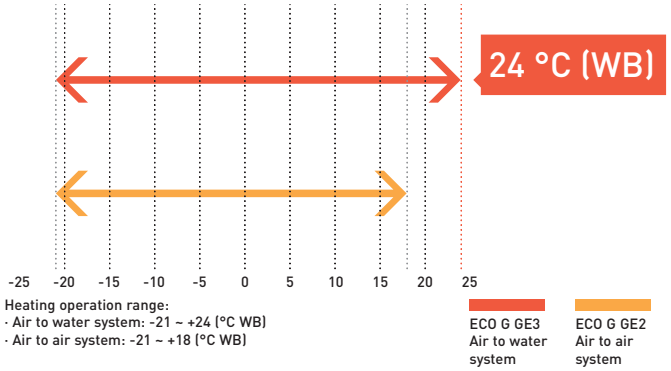

Heating operation range:
· Air to water system: -21 ~ +24 (°C WB)
· Air to air system: -21 ~ +18 (°C WB)

DHW priority mode setting in heating (GE3)

Ambient temperature range for DHW production is expandable by setting depending on DHW needs. Hot water at 65 °C is available in heating without additional electric heaters.

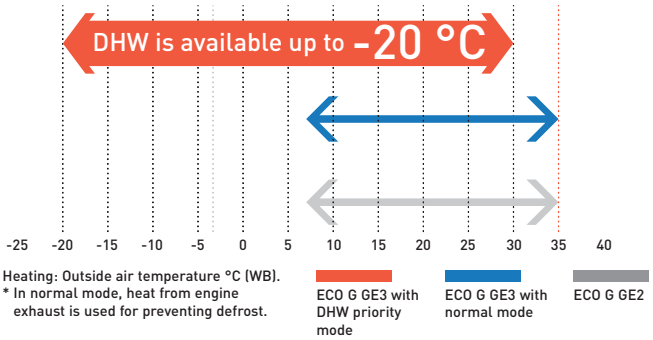

Heating: Outside air temperature °C (WB).
* In normal mode, heat from engine exhaust is used for preventing defrost.

No defrost requirement (GE3 / GF3)

No defrost mode is selectable to get higher capacity under low ambient temperature.

Flexible design with wide line up of indoor units

The advanced GE3 Series can connect up to 64 indoor units.

Series	16 HP	20 HP	25 HP	30 HP	32 HP	36 HP	40 HP	45 HP	50 HP	55 HP	60 HP
2-Pipe ECO G GE3 Series	26	33	41	50	52	59	64	64	64	64	64
3-Pipe ECO G GF3 Series	24	24	24	—	—	—	—	—	—	—	—

2-Pipe ECO G GE3 Series

The new GE3 Series has a top level of seasonal efficiency in this category. In addition, this product fits with special needs for commercial application thanks to DHW priority setting and Auto pump down functions.

Technical focus

- Superior seasonal energy efficiency, maximum 240,1 %
- DHW priority setting
- Operating range in heating down to -21 °C and up to +24 °C for air to water system
- No defrost cycle
- Capacity ratio 50 ~ 200 % [1)]
- Option of DX or chilled water for indoor heat exchange
- Maximum total piping length: 780 m

1) 50 ~ 200 % only when one outdoor unit is installed. In other cases 50 ~ 130 %.

HP			**16 HP**	**20 HP**	**25 HP**	**30 HP**
Model			**U-16GE3E5**	**U-20GE3E5**	**U-25GE3E5**	**U-30GE3E5**
Power supply	Voltage	V	220/230/240	220/230/240	220/230/240	220/230/240
	Phase		Single Phase	Single Phase	Single Phase	Single Phase
	Frequency	Hz	50	50	50	50
Cooling capacity		kW	45,0	56,0	71,0	85,0
Refrigeration load Pdesign		kW	45,0	56,0	71,0	85,0
ηsc (LOT21) [1)]		**%**	**220,60**	**219,30**	**240,10**	**229,30**
Input power cooling		kW	1,17	1,12	1,80	1,80
Hot water in cooling mode (at 65 °C outlet)		kW	23,60	29,10	36,40	46,00
Max COP in hot water		W/W	1,55	1,55	1,49	1,47
Gas consumption cooling		kW	41,10	52,10	67,20	84,10
Heating capacity	Standard	kW	50,0	63,0	80,0	95,0
	Low temperature	kW	53,0	67,0	78,0	90,0
Refrigeration load Pdesign		kW	37,00	53,00	60,00	65,00
ηsh (LOT21) [1)]		**%**	**150,60**	**143,70**	**146,90**	**151,30**
Input power heating		kW	0,56	1,05	0,91	1,75
Gas consumption heating	Standard	kW	38,00	51,10	68,60	75,30
	Low temperature	kW	45,40	62,70	60,70	73,90
Starter amperes		A	30	30	30	30
External static pressure		Pa	10	10	10	10
Air volume		m³/min	370	420	460	460
Sound power	Normal / Silent mode	dB	80/77	80/77	84/81	84/81
Dimension	H x W x D	mm	2255 x 1650 x 1000	2255 x 1650 x 1000	2255 x 2026 x 1000	2255 x 2026 x 1000
Net weight		kg	765	765	870	880
Piping connections	Liquid pipe	Inch (mm)	1/2 (12,70)	5/8 (15,88)	5/8 (15,88)	3/4 (19,05)
	Gas pipe	Inch (mm)	1-1/8 (28,58)	1-1/8 (28,58)	1-1/8 (28,58)	1-1/4 (31,75)
	Fuel gas	Inch (mm)	19,05 (R3/4)	19,05 (R3/4)	19,05 (R3/4)	19,05 (R3/4)
	Exhaust drain	mm	25	25	25	25
	Hot water supply in/out		Rp3/4 (Nut, thread)	Rp3/4 (Nut, thread)	Rp3/4 (Nut, thread)	Rp3/4 (Nut, thread)
Elevation difference (in/out)			50	50	50	50
Refrigerant (R410A) / CO_2 Eq.		kg / T	11,50/24,00	11,50/24,00	11,50/24,00	11,50/24,00
Maximum number of connectable indoor units			26	33	41	50
Operating range	Cool Min ~ Max	°C (DB)	-10 ~ +43	-10 ~ +43	-10 ~ +43	-10 ~ +43
	Heat Min ~ Max	°C (WB)	-21 ~ +18	-21 ~ +18	-21 ~ +18	-21 ~ +18

1) SEER/SCOP is calculated based on the seasonal space cooling/heating efficiency "η" values of the COMMISSION REGULATION (EU) 2016/2281.

Hot water take out function added, EU safety regulation standard cleared. 25 HP chassis enlarged due to specification improvement. Pre-coat corrosion fin. Auto pump down function.

GAS POWERED ECO G

5 YEARS COMPRESSOR WARRANTY

2-Pipe ECO G GE3 Series combination

The new GE3 Series has a top level of seasonal efficiency in this category. In addition, this product fits with special needs for commercial application thanks to DHW priority setting and Auto pump down functions.

Technical focus

- Maximum 60 HP combination
- Superior seasonal energy efficiency, maximum 240,1 %
- DHW priority setting
- Operating range in heating down to -21 °C and up to +24 °C for air to water system
- No defrost cycle
- Option of DX or chilled water for indoor heat exchange
- Maximum total piping length: 780 m

HP			32 HP	36 HP	40 HP	45 HP	50 HP	55 HP	60 HP
Model			U-16GE3E5 U-16GE3E5	U-16GE3E5 U-20GE3E5	U-20GE3E5 U-20GE3E5	U-20GE3E5 U-25GE3E5	U-25GE3E5 U-25GE3E5	U-25GE3E5 U-30GE3E5	U-30GE3E5 U-30GE3E5
Power supply	Voltage	V	220/230/240	220/230/240	220/230/240	220/230/240	220/230/240	220/230/240	220/230/240
	Phase		Single Phase	Single Phase	Single Phase	Single Phase	Single Phase	Single Phase	Single Phase
	Frequency	Hz	50	50	50	50	50	50	50
Cooling capacity		kW	90,0	101,0	112,0	127,0	142,0	156,0	170,0
Input power cooling		kW	2,34	2,29	2,24	2,92	3,60	3,60	3,60
Hot water in cooling mode (at 65 °C outlet)		kW	47,20	52,70	58,20	65,50	72,80	82,40	92,00
Max COP in hot water		W/W	1,55	1,55	1,55	1,52	1,49	1,48	1,47
Gas consumption cooling		kW	82,20	93,20	104,20	119,30	134,40	151,30	168,20
Heating capacity	Standard	kW	100,0	113,0	126,0	143,0	160,0	175,0	190,0
	Low temperature	kW	106,0	120,0	134,0	145,0	156,0	168,0	180,0
Input power heating		kW	1,12	1,61	2,10	1,96	1,82	2,66	3,50
Gas consumption heating	Standard	kW	76,00	89,10	102,20	119,70	137,20	143,90	150,60
	Low temperature	kW	90,80	108,10	125,40	123,40	121,40	134,60	147,80
Starter amperes		A	30	30	30	30	30	30	30
External static pressure		Pa	10	10	10	10	10	10	10
Air volume		m³/min	370/370	370/420	420/420	420/460	460/460	460/460	460/460
Sound power	Normal / Silent mode	dB	83/80	83/80	83/80	86/83	87/84	87/84	87/84
Dimension	Height	mm	2255	2255	2255	2255	2255	2255	2255
	Width	mm	1650+100 +1650	1650+100 +1650	1650+100 +1650	1650+100 +2026	2026+100 +2026	2026+100 +2026	2026+100 +2026
	Depth	mm	1000	1000	1000	1000	1000	1000	1000
Net weight		kg	1530(765+765)	1530(765+765)	1530(765+765)	1635(765+870)	1740(870+870)	1750(870+880)	1760(880+880)
Piping connections	Liquid pipe	Inch (mm)	3/4(19,05)	3/4(19,05)	3/4(19,05)	3/4(19,05)	3/4(19,05)	7/8(22,22)	7/8(22,22)
	Gas pipe	Inch (mm)	1-1/4(31,75)	1-1/4(31,75)	1-1/2(38,10)	1-1/2(38,10)	1-1/2(38,10)	1-1/2(38,10)	1-1/2(38,10)
	Fuel gas	Inch (mm)	19,05(R3/4)	19,05(R3/4)	19,05(R3/4)	19,05(R3/4)	19,05(R3/4)	19,05(R3/4)	19,05(R3/4)
	Exhaust drain port	mm	25	25	25	25	25	25	25
	Hot water supply in/out		Rp3/4 (Nut, thread)	Rp3/4 (Nut, thread)	Rp3/4 (Nut, thread)	Rp3/4 (Nut, thread)	Rp3/4 (Nut, thread)	Rp3/4 (Nut, thread)	Rp3/4 (Nut, thread)
Elevation difference (in/out)			50	50	50	50	50	50	50
Refrigerant (R410A) / CO_2 Eq.		kg / T	2x11,50/24,00	2x11,50/24,00	2x11,50/24,00	2x11,50/24,00	2x11,50/24,00	2x11,50/24,00	2x11,50/24,00
Maximum number of connectable indoor units			52	59	64	64	64	64	64
Operating range	Cool Min ~ Max	°C	-10~+43	-10~+43	-10~+43	-10~+43	-10~+43	-10~+43	-10~+43
	Heat Min ~ Max	°C	-21~+18	-21~+18	-21~+18	-21~+18	-21~+18	-21~+18	-21~+18

Data is for reference. Hot water take out function added, EU safety regulation standard cleared. 25 HP chassis enlarged due to specification improvement. Pre-coat corrosion fin. Auto pump down function.

GAS POWERED ECO G

5 YEARS COMPRESSOR WARRANTY

Rating Conditions: Cooling Indoor 27 °C DB / 19 °C WB. Cooling Outdoor 35 °C DB / 24 °C WB. Heating Indoor 20 °C DB. Heating Outdoor 7 °C DB / 6 °C WB. (DB: Dry Bulb; WB: Wet Bulb).
Specifications subject to change without notice. For detailed information about ErP / Energy Labelling, please visit our websites www.aircon.panasonic.eu or www.ptc.panasonic.eu.

3-Pipe ECO G GF3 Series

Excellent performance and free Domestic Hot Water

Panasonic 3-Pipe Multi system is capable of simultaneous heating/cooling and individual operation of each indoor unit by only one outdoor unit. As a result, efficient individual air conditioning is possible in buildings having diverse room temperatures.
In addition, Domestic Hot Water is created for free in cooling mode without additional boilers or electric heaters.

System example.
Improved maintenance intervals. The unit only needs to be serviced every 10000 hours. This is the best in the industry.

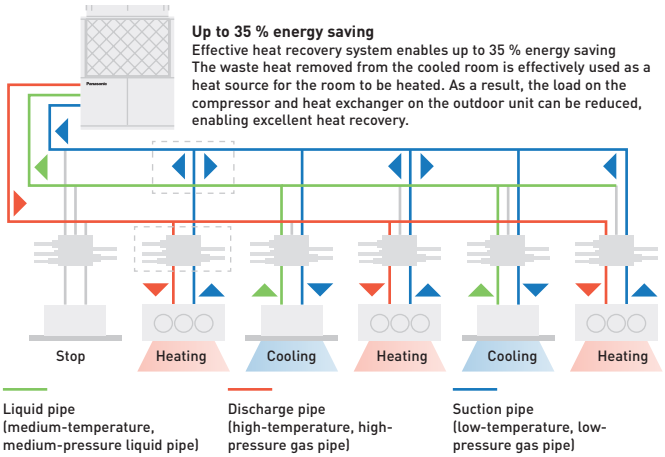

3-Pipe control Solenoid valve kit.

KIT-P56HR3
(CZ-P56HR3 + CZ-CAPE2).

KIT-P160HR3
(CZ-P160HR3 + CZ-CAPE2).

CZ-P56HR3
Up to 5,6 kW.

CZ-P160HR3
Up to 16,0 kW.

3-Pipe control PCB.

CZ-CAPE2*

* For Wall-mounted. Must be added to the CZ-P56HR3 or CZ-P160HR3.

Solenoid valve kit

To be fitted on all 'zones' to allow simultaneous heating and cooling. Up to 24 indoor units are capable of simultaneous heating/cooling operation. Oil-recovery operation to gives more stable comfort air-conditioning control.

Power supply problems?

If you are short of electrical power, our gas heat pump could be the perfect solution:
- Runs on natural gas or LPG and just needs Single Phase supply
- Enables the building's electrical power supply to be used for other critical electrical demands
- Reduces capital cost to upgrade power substations to run heating and cooling systems
- Reduces power loadings within a building especially during peak periods
- Electricity supply freed up for other uses such as IT servers, commercial refrigeration, manufacturing, lighting etc.

ECO G outdoor Heat Exchanger.
- Integrated DX and hot water coil
- No defrost required
- Faster reaction to demand for heating

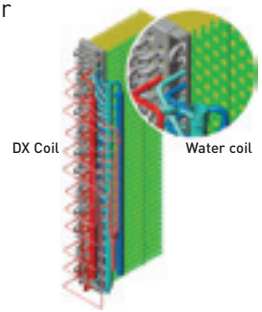

DHW production in heating and cooling

Free DHW is available 365 days a year, in all seasons. Hot water is produced effectively from waste heat from engine. Perfect solution for hotel projects required high demand of hot water.

HP	16 HP	20 HP	25 HP
Free DHW (in cooling mode)	23,6 kW	27,1 kW	40,5 kW

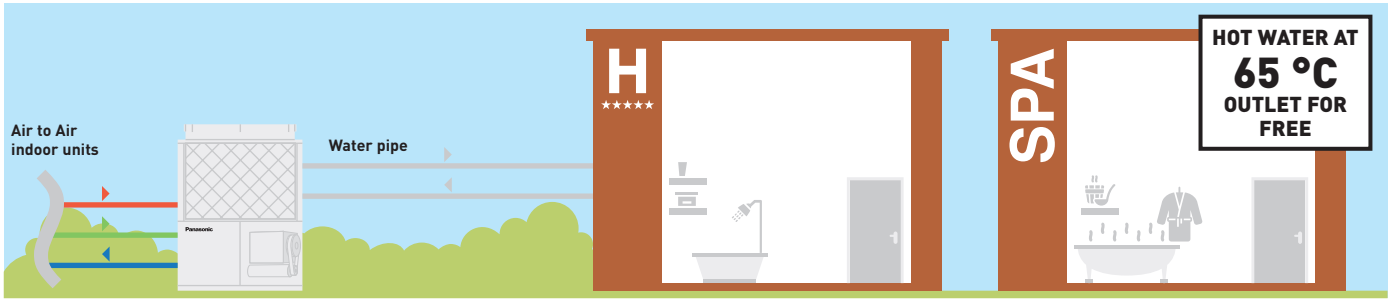

3-Pipe ECO G GF3 Series

DHW available in all seasons

Domestic hot water can be taken out from waste heat of engine effectively in heating & cooling - all year round.

Outstanding seasonal energy efficiency, maximum 204,9 %

· Capacity ratio 50 ~ 200 %
· No defrost cycle
· Maximum total piping length: 780 m

Flexible installation

· Full heating capacity down to -21 °C (WB)
· DHW production for all the year
· Maximum 24 indoor units connectable

HP			16 HP	20 HP	25 HP
Model			**U-16GF3E5**	**U-20GF3E5**	**U-25GF3E5**
Power supply	Voltage	V	220/230/240	220/230/240	220/230/240
	Phase		Single Phase	Single Phase	Single Phase
	Frequency	Hz	50	50	50
Cooling capacity		kW	45,0	56,0	71,0
Refrigeration load Pdesign		kW	45,0	56,0	71,0
ηsc (LOT21) [1]		**%**	**185,20**	**198,80**	**204,90**
Input power cooling		kW	1,17	1,40	1,80
Hot water in cooling mode (at 65 °C outlet)		kW	23,60	27,10	40,50
Gas consumption cooling		kW	45,80	54,80	73,70
Heating capacity	Standard	kW	50,0	63,0	80,0
	Low temperature	kW	53,0	67,0	78,0
Refrigeration load Pdesign		kW	38,00	52,00	60,00
ηsh (LOT21) [1]		**%**	**139,20**	**140,20**	**150,90**
Input power heating		kW	0,56	1,05	0,91
Gas consumption heating	Standard	kW	42,20	51,10	68,60
Starter amperes		A	30	30	30
Air volume		m^3/min	370	400	460
Sound power	Normal / Silent mode	dB	80/77	81/78	84/81
Dimension	H x W x D	mm	2255 x 1650 x 1000	2255 x 1650 x 1000	2255 x 2026 x 1000
Net weight		kg	775	775	880
Piping connections	Liquid pipe	Inch (mm)	3/4 (19,05)	3/4 (19,05)	3/4 (19,05)
	Gas pipe	Inch (mm)	1 1/8 (28,58)	1 1/8 (28,58)	1 1/8 (28,58)
	Discharge	Inch (mm)	7/8 (22,22)	1 (25,40)	1 (25,40)
	Fuel gas	Inch (mm)	19,05 (R3/4)	19,05 (R3/4)	19,05 (R3/4)
	Exhaust drain port	mm	25	25	25
	Hot water supply in/out		Rp3/4 (Nut, thread)	Rp3/4 (Nut, thread)	Rp3/4 (Nut, thread)
Elevation difference (in/out)		m	50	50	50
Refrigerant (R410A) / CO_2 Eq.		kg / T	11,50/24,00	11,50/24,00	11,50/24,00
Maximum number of connectable indoor units			24	24	24
Operating range	Cool Min ~ Max	°C	-10 ~ +43	-10 ~ +43	-10 ~ +43
	Heat Min ~ Max	°C	-21 ~ +18	-21 ~ +18	-21 ~ +18

Solenoid valve kit		
KIT-P56HR3	**KIT-P56HR3**	3-Pipe control Solenoid valve kit (up to 5,6 kW)
	CZ-P56HR3	Solenoid valve kit (up to 5,6 kW)
	CZ-CAPE2	3-Pipe control PCB
KIT-P160HR3	**KIT-P160HR3**	3-Pipe control Solenoid valve kit (from 5,6 to 16,0 kW)
	CZ-P160HR3	Solenoid valve kit (up to 16,0 kW)
	CZ-CAPE2	3-Pipe control PCB
CZ-CAPEK2 [2]		3-Pipe control PCB for Wall-mounted

3-Pipe control box kit	
CZ-P456HR3	4 ports 3 pipe box (up to 5,6 kW per port)
CZ-P656HR3	6 ports 3 pipe box (up to 5,6 kW per port)
CZ-P856HR3	8 ports 3 pipe box (up to 5,6 kW per port)
CZ-P4160HR3	4 ports 3 pipe box (up to 16,0 kW per port)

GAS POWERED ECO G

5 YEARS COMPRESSOR WARRANTY

1) SEER/SCOP is calculated based on the seasonal space cooling/heating efficiency "η" values of the COMMISSION REGULATION (EU) 2016/2281. 2) Available for S-45/56/73/106MK2E5A.

Hot water take out function added, EU safety regulation standard cleared. 25 HP chassis enlarged due to specification improvement. Pre-coat corrosion fin. Auto pump down function.

Rating Conditions: Cooling Indoor 27 °C DB / 19 °C WB. Cooling Outdoor 35 °C DB / 24 °C WB. Heating Indoor 20 °C DB. Heating Outdoor 7 °C DB / 6 °C WB. (DB: Dry Bulb; WB: Wet Bulb).
Specifications subject to change without notice. For detailed information about ErP / Energy Labelling, please visit our websites www.aircon.panasonic.eu or www.ptc.panasonic.eu.

Panasonic GHP/EHP Hybrid System.
First intelligent technology

Taking advantage of Gas and Electricity to achieve better energy saving ever.

U-20GES3E5 (20 HP)

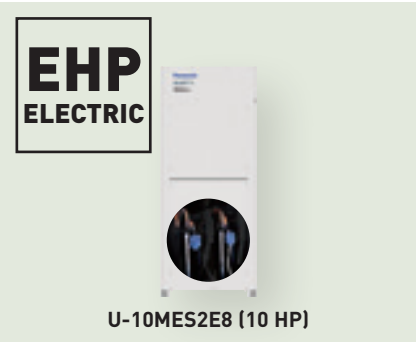

U-10MES2E8 (10 HP)

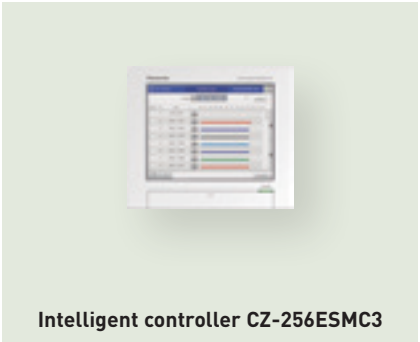

Intelligent controller CZ-256ESMC3

Master unit GHP
- Load calculation of GHP&EHP
- Operation in accordance with the upper limit setting.
- Individual capacity control
- Device control
- Special control (Defrost, Oil recovery, 4Way-valve matching / Abnormality processing)

Slave Unit EHP

Intelligent controller
- Demand monitoring
- Indoor/Total load calculation
- Operation Ratio Indication upper limit setting of MAP according to:
  - Energy unit price
  - Electric power demand
  - Air conditioning load

Schematic of GHP/EHP Hybrid System.

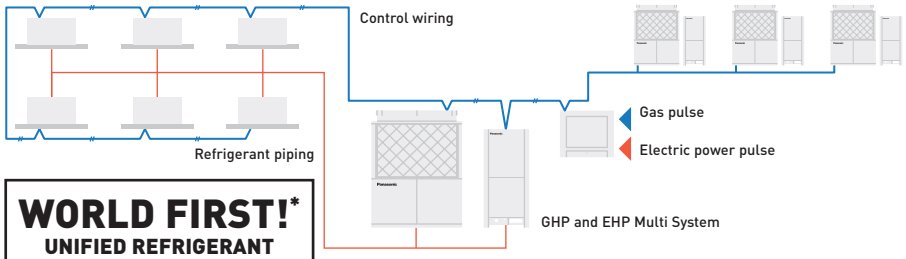

WORLD FIRST!*
UNIFIED REFRIGERANT CYCLE IN GHP AND EHP

* Introduced as a world first technology by Panasonic in April 2016.

1 Peak cut of electricity consumption

Electrical peak demand is significantly reduced thanks to GHP system consuming less than 10 % of electricity of EHP system.

* Image of Hotel project.

Electric power usage.

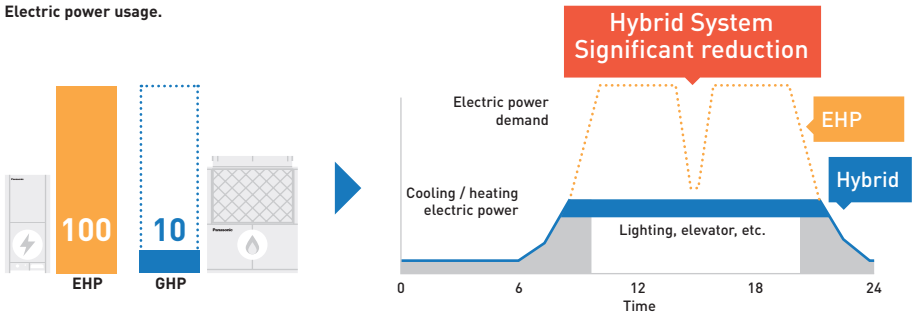

2 Optimal control to maximize energy saving

Switching the operation between GHP and EHP system on the basis of usage, energy demand, part load.

* Specification is tentative.

Optional control method.

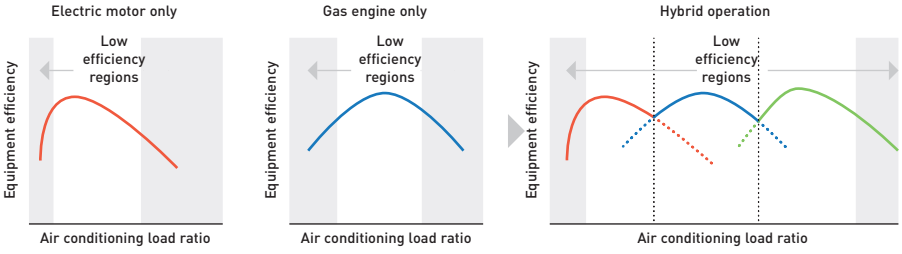

2 Free Hot Water production by GHP system

Hot water is effectively produced from waste heat of engine.

* Specification is tentative.

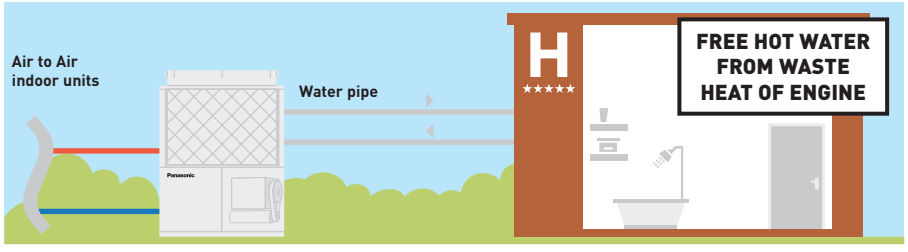

GHP/EHP Hybrid System

It is time to save energy utilising the advantages from gas and electricity by Panasonic reliable ECO G / ECOi technology

New hybrid system can offer intelligent operation logic for better economy and efficiency by taking the best of ECO G and ECOi. This is like a hybrid car in heating and cooling system.

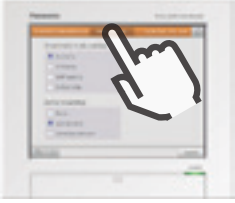

How smartly operate GHP and EHP system depending on your needs?

4 different mode settings are available with the intelligent controller. Switch the operation between GHP and EHP or operating both units together to maximize the effect for different requirement such as economy and efficiency.

Economy mode

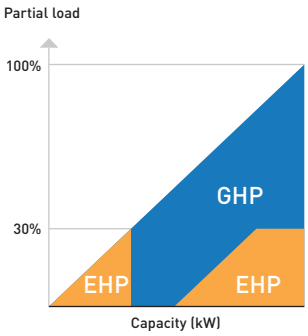

Efficiency mode

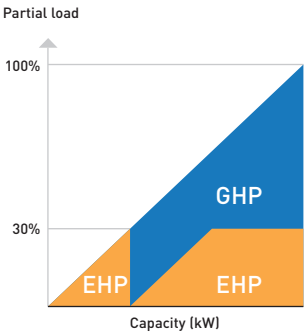

GHP first mode

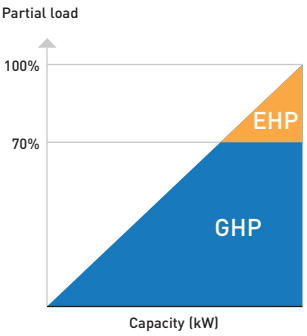

EHP first mode

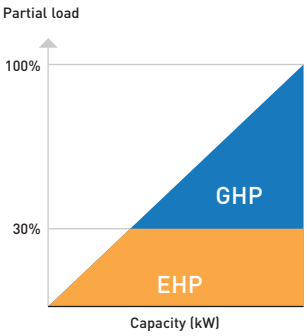

Optimal control example: Economy mode

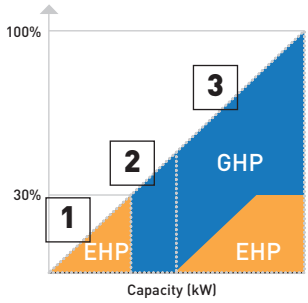

Only EHP

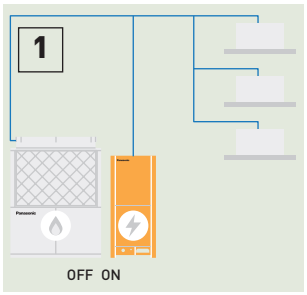

Only GHP

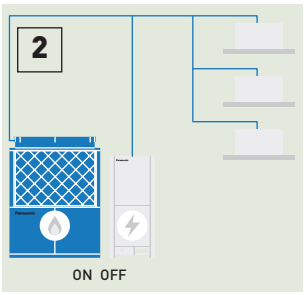

Balanced operation

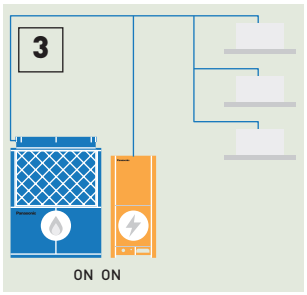

DHW priority mode in Hybryd + WHE System

When DHW is demanded during cooling operation by EHP, EHP is automatically turned "OFF" and GHP is turned "ON" to produce DHW for free.

High efficiency mode

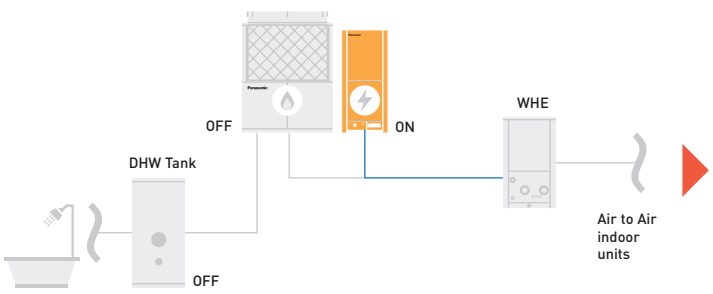

DHW priority mode

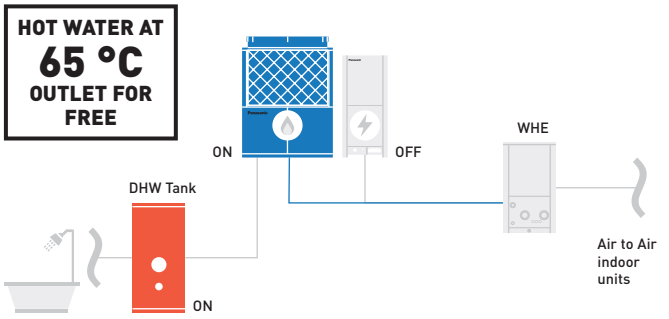

2-Pipe Hybrid GHP/EHP

- Extended lifespan with intelligent energy management. The goal is for the EHP and GHP to work at optimal speeds
- Low energy cost
- Low emissions

Technical focus

- 4 different setting (Economy, Efficiency, GHP first mode, EHP first mode)
- DHW energy recovery 26,2 kW (at 65 °C) by waste heat of engine
- Unified refrigerant cycle in GHP and EHP for easy installation
- DHW priority mode with WHE system
- Up to 48 indoor units connectable

			Hybrid GHP	Hybrid EHP
HP			**20 HP**	**10 HP**
Outdoor Units			**U-20GES3E5**	**U-10MES2E8**
Power supply	Voltage	V	220/230/240	220/230/240
	Phase		Single Phase	Three Phase
	Frequency	Hz	50	50
Cooling capacity		kW	56,0	28,0
ηsh (LOT21) [1]		**%**	**211,80**	**275,40**
Running current cooling		A	5,18	10,70/10,20/9,80
Input power cooling		kW	1,12	6,41
Hot water in cooling mode (at 65 °C outlet)		kW	26,20	—
Gas consumption cooling		kW	52,10	—
Heating capacity		kW	63,0	31,5
ηsh (LOT21) [1]		**%**	**143,20**	**167,60**
Running current heating		A	4,79	11,10/10,50/10,10
Input power heating		kW	1,05	6,62
Gas consumption heating	Standard	kW	51,10	—
Starting current		A	30	1
Air volume		m^3/min	420	224
Sound pressure	Normal mode	dB(A)	58	56
Sound power	Normal mode	dB	80	77
Dimension	H x W x D	mm	2255 x 1650 x 1000	1842 x 770 x 1000
Net weight		kg	765	210
Piping connections [2]	Liquid pipe	Inch (mm)	5/8 (15,88)	3/8 (9,52)
	Gas pipe	Inch (mm)	1 1/8 (28,58)	7/8 (22,22)
	Balance pipe	Inch (mm)	1/4 (6,35)	1/4 (6,35)
Drain heater		W	40	—
Refrigerant (R410A) / CO_2 Eq.		kg / T	11,05/23,0724	5,60/11,6928
Maximum allowable indoor / outdoor capacity ratio %			50 ~ 130	50 ~ 130
Operating range	Cool Min ~ Max	°C	-10 ~ +43	-10 ~ +43
	Heat Min ~ Max	°C	-21 ~ +18	-21 ~ +18

1) SEER/SCOP is calculated based on the seasonal space cooling/heating efficiency "η" values of the COMMISSION REGULATION (EU) 2016/2281.
2) Please refer service manual when the maximum piping length exceeds 90 meters (equivalent length).

HIGH COP | GAS POWERED ECO G | 5 YEARS COMPRESSOR WARRANTY

Water Heat Exchanger for hydronic applications

Chiller replacement. Chilled water supply to fan coils

Chiller replacement.
When some old chillers needed replacing at the end of their operational lifetime, ECO Gs with Water Heat Exchangers enabled the project to be carried out in stages whilst still utilising the existing water pipe work and fan coils. This enabled the project to be delivered on time, to a restricted budget and avoided all issues regarding refrigerant in confined spaces.

When a top London restaurant opened, it needed large volumes of fresh air to ensure the optimum dining environment. ECO G units connected to the cooling coils within the air handling equipment ensured the air was introduced in the right condition in both summer and winter.

Connection to 'close control' computer equipment

Computer room applications.

When all available electrical power needed to be utilised for the IT equipment for a leading international bank, the cooling load of over 450 kW had to be powered by gas. The outdoor units were connected via Water Heat Exchangers to cooling coils inside the 'close control' units thereby maintaining a conditioned environment for temperature and humidity. By utilising the hot water function over 100 kW of hot water are supplied to the building and therefore the additional benefit of considerable CO_2 savings is ensured.

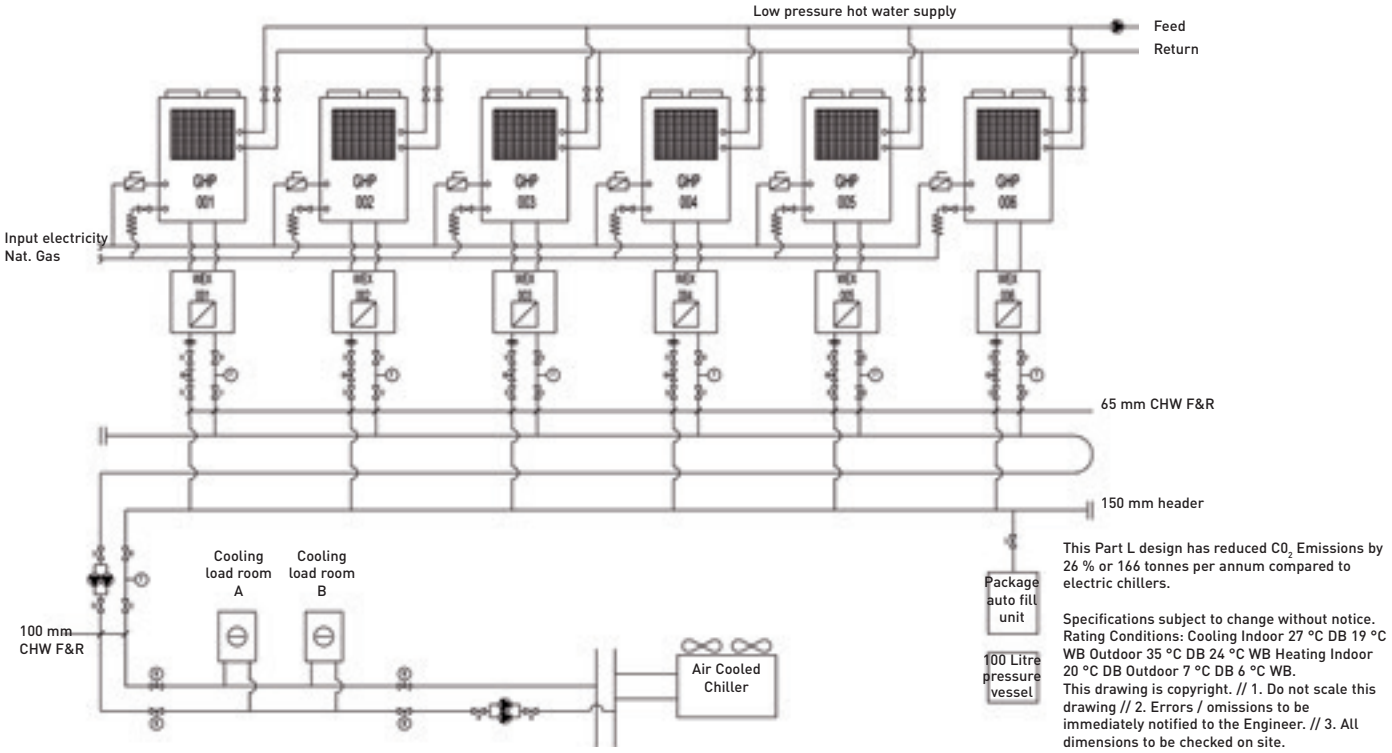

ECOi Water Heat Exchanger

Electrical VRF with Water Heat Exchanger

· With this easy to install Water Heat Exchanger unit, you can now cover projects up to 51 kW hot water demand or 44 kW on chilled application on a efficient way and cost effective

System example.

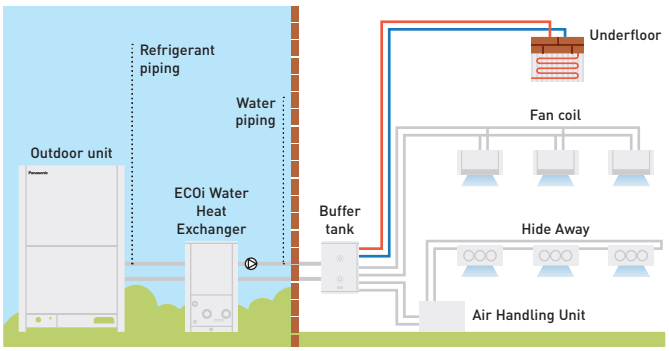

A buffer tank of minimum 280l for 28 kW and 500l for 50 kW is always needed.

Example of Hotel renewal of existing Chiller and Boiler system with Panasonic ECO G and Aquarea mixed solution

ECO G and Aquarea are the smart solution for renewal Chiller/Boiler applications with annual running cost savings around 13.600€.

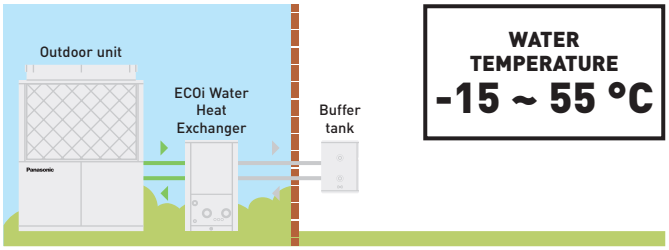

2-Pipe ECOi with Water Heat Exchanger for chilled and hot water production

Water Heat Exchanger (WHE) for hydronic applications

WHE for ECOi system controlled by a timer remote control CZ-RTC5B.
Energy-efficient capacity control with superior external static pressure is now ready.
Availability of easy vertical stacking allows installations in a limited space (up to 3 units)*.
Stainless steel plate heat exchanger with anti-freeze protection control.
Change over between heating and cooling operation.

* Stacking kit (PAW-3WSK) is necessary.

Technical focus

Heating, cooling and DHW — A class water pump included (only in P model) — Flexible modularity from 25 kW — Better partial load vs standard chiller system — Compatible with all centralized controllers — Maximum distance between outdoor unit and WHE: 170 m — Maximum hot water outlet temperature: 45 °C — Minimum chilled water outlet temperature: 5 °C — Outdoor temperature range in heating mode: -11 °C to +15 °C (with low temperature kit -25 °C*)

*Available as a spare part.

Hydrokit with A class water pump			**PAW-250WP5G1**	**PAW-500WP5G1**
Hydrokit without pump			**PAW-250W5G1**	**PAW-500W5G1**
Cooling capacity at 35 °C, water outlet 7 °C		kW	25,0	50,0
Heating capacity		kW	28,0	56,0
Heating capacity at +7 °C, heating water temperature at 45 °C		kW	28,0	56,0
COP at +7 °C with heating water temperature at 45 °C		W/W	2,97	3,10
Heating Energy Efficiency class at 35 °C [1]			**A++**	**A++**
ηsh (LOT1) [2]		**%**	**152,00**	**152,00**
Dimension	H x W x D	mm	1000 x 575 x 1110	1000 x 575 x 1110
Net weight		kg	135 (140 with pump)	155 (165 with pump)
Water pipe connector			Rp2 Female Thread (50A)	Rp2 Female Thread (50A)
Heating water flow (ΔT=5 K. 35 °C)		m^3/h	5,16	10,32
Capacity of integrated electric heater		kW	Not equipped	Not equipped
Flow switch			Equipped	Equipped
Water filter			Equipped	Equipped
Input power		kW	0,329 (with A class water pump) / 0,024 (without pump)	0,574 (with A class water pump) / 0,024 (without pump)
Maximum current		A	1,43 (with A class water pump) / 0,10 (without pump)	2,50 (with A class water pump) / 0,10 (without pump)
Outdoor unit			**U-10ME2E8**	**U-20ME2E8**
Sound pressure		dB(A)	56	60
Dimension	H x W x D	mm	1842 x 770 x 1000	1842 x 770 x 1000
Net weight		kg	210	375
Piping connections	Liquid pipe	Inch (mm)	3/8 (9,52)	5/8 (15,88)
	Gas pipe	Inch (mm)	7/8 (22,22)	1-1/8 (28,58)
Refrigerant (R410A) / CO_2 Eq.		kg	5,6 *Need Additional gas amount at site	9,5 *Need Additional gas amount at site
Pipe length range / Elevation difference (in/out)		m	170 / 50 (OD above) 35 (OD below)	170 / 50 (OD above) 35 (OD below)
Pipe length for nominal capacity		m	7,5	7,5
Pipe length for additional gas / Additional gas amount (R410A)		m / g/m	0 < / Refer to manual	0 < / Refer to manual
Operation range	Heat Min ~ Max	°C	-11 ~ +15 [3]	-11 ~ +15 [3]
Water outlet temperature range	Cool Min ~ Max	°C	+5 ~ +15	+5 ~ +15
	Heat Min ~ Max	°C	+35 ~ +45	+35 ~ +45

Accessories	
PAW-3WSK	Stacking kit for vertical stacking (4 sets in the Kit)

1) Unit efficiency energy level: Scale from A+++ to D. 2) Seasonal space cooling/heating energy efficiency following COMMISSION REGULATION (EU) 813/2013. 3) With accessory low temperature kit -25 ~ +15 °C. Available only as a spare part.

Performance calculation in agreement with Eurovent. Sound pressure measured at 1 m from the outdoor unit and at 1,5 m height.

Stacking kit PAW-3WSK.
It is possible to stack up to 3 units. When stacking units, always anchor the bottom unit to the ground using the anchor holes.

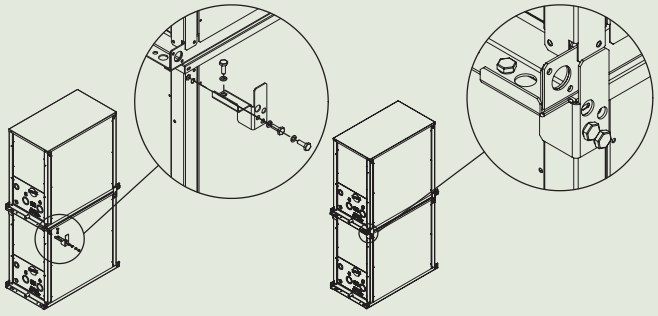

2-Pipe ECO G with Water Heat Exchanger for chilled and hot water production

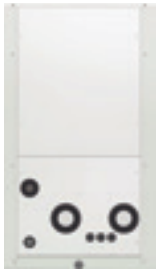

Water Heat Exchanger (WHE) for hydronic applications

WHE for ECO G system controlled by a timer remote control CZ-RTC5B.
Energy-efficient capacity control with superior external static pressure is now ready.
Availability of easy vertical stacking allows installations in a limited space (up to 3 units)*.
Stainless steel plate heat exchanger with anti-freeze protection control.
Change over between heating and cooling operation.

* Stacking kit (PAW-3WSK) is necessary.

Technical focus

Heating, cooling and DHW — A class water pump included (only in P model) — No cascade installation up to 80 kW — Free DHW from waste heat of engine — Compatible with all centralized controllers — Maximum distance between outdoor unit and WHE: 170 m — Hot water outlet temperatures from 35 °C to 55 °C — Chilled water outlet temperatures from -15 °C to +15 °C — Minimum outdoor temperature in heating mode: -21 °C

Hydrokit with A class water pump			**PAW-500WP5G1**	**PAW-710WP5G1**
Hydrokit without pump			**PAW-500W5G1**	**PAW-710W5G1**
Heating capacity		kW	60,0	80,0
Heating capacity at +7 °C, heating water temperature at 35 °C		kW	60,9	81,2
COP at +7 °C with heating water temperature at 35 °C		W/W	1,15	1,18
Heating capacity at +7 °C, heating water temperature at 45 °C		kW	60,0	80,0
COP at +7 °C with heating water temperature at 45 °C		W/W	1,02	1,04
Heating capacity at -7 °C, heating water temperature at 35 °C		kW	48,2	50,8
COP at -7 °C, heating water temperature at 35 °C		W/W	0,80	0,80
Heating capacity at -15 °C, heating water temperature at 35 °C		kW	46,3	50,0
COP at -15 °C with heating water temperature at 35 °C		W/W	0,80	0,80
Refrigeration load Pdesign		kW	48,0	—
Heating Energy Efficiency class at 35 °C [1]			**A+**	**—**
ηsh (LOT1) [2]		**%**	**130,00**	**128,00**
Cooling capacity		kW	—	—
Cooling capacity at +35 °C, outlet temperature 7 °C, inlet temperature 12 °C		kW	50,0	67,0
EER at +35 °C, outlet temperature 7 °C, inlet temperature 12 °C		W/W	0,78	0,89
Dimension	H x W x D	mm	1000 x 575 x 1110	1000 x 575 x 1110
Net weight		kg	155 (165 with pump)	160 (175 with pump)
Water pipe connector			Rp2 Female Thread (50A)	Rp2 Female Thread (50A)
Heating water flow (ΔT=5 K. 35 °C)		m³/h	10,32	13,76
Capacity of integrated electric heater		kW	Not equipped	Not equipped
Flow switch			Equipped	Equipped
Water filter			Equipped	Equipped
Input power		kW	0,574 (with A class water pump) / 0,024 (without pump)	0,824 (with A class water pump) / 0,024 (without pump)
Maximum current		A	2,50 (with A class water pump) / 0,10 (without pump)	3,60 (with A class water pump) / 0,10 (without pump)
Outdoor Unit			**U-20GE3E5**	**U-30GE3E5**
Sound power	Normal / Silent	dB	80 / 77	84 / 81
Dimension	H x W x D	mm	2255 x 1650 x 1000	2255 x 2026 x 1000
Net weight		kg	765	880
Piping connections	Liquid pipe	Inch (mm)	5/8 (15,88)	3/4 (19,05)
	Gas pipe	Inch (mm)	1-1/8 (28,58)	1-1/4 (31,75)
Pipe length / Pipe length for nominal capacity		m	7 / 170	7 / 170
Elevation difference (in/out)		m	50 (OD above) 35 (OD below)	50 (OD above) 35 (OD below)
Operation range	Heat Min ~ Max	°C	-21 ~ +24 (until outlet temperature 45)	-21 ~ +24 (until outlet temperature 45)
Water outlet temperature range	Cool Min ~ Max	°C	-15 ~ +15	-15 ~ +15
	Heat Min ~ Max	°C	+35 ~ +55	+35 ~ +55

Accessories	
PAW-3WSK	Stacking kit for vertical stacking (4 sets in the Kit)

1) Unit efficiency energy level: Scale from A+++ to D. 2) Seasonal space cooling/heating energy efficiency following COMMISSION REGULATION (EU) 813/2013.

Performance calculation in agreement with Eurovent. Sound pressure measured at 1 m from the outdoor unit and at 1,5 m height.

GAS POWERED ECO G

5 YEARS COMPRESSOR WARRANTY

Leak detection and automatic refrigerant pump down

Improving safety and the environment

Panasonic has developed an innovative solution to detect refrigerant leaks that offer complete assurance and protection for end users, building occupiers and the environment. Panasonic's Pump Down System is ideal for hotels, offices and public buildings where safety for occupants and the building owners is of utmost importance.
The system monitors refrigerant leakage continually and provides a warning before refrigerant leaks, preventing major refrigerant loss and potentially damaging the system's efficiency. The new system can improve potential refrigerant loss to approximately 90 %.
As well as ensuring safe and reliable operation, Panasonic's Pump Down System contributes to a building qualifying for additional BREEAM points and enables compliance with current EN378 2008 standards, covering applications where refrigeration concentration levels exceed practical safety limits of 0,44 kg/m³.
Panasonic has developed two detection methods that can operate simultaneously to offer complete protection for owners, building occupiers and the environment.

Pump Down system

This innovative pump down system can be connected in two ways:
· With sensor leakage
· Without sensor leakage, using only an innovative algorithm

Basic pump down function:
· Detect the leakage
· Activate pump down process
· Collect the gas in the tank
· Close the valves to isolate the gas

Key points:
· Comply with legislation
· Protect personnel
· Protect the environment
· Save on operating costs

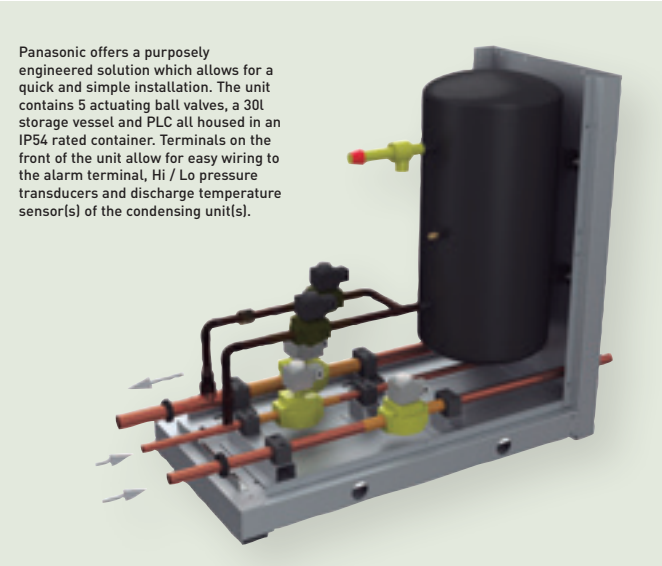

Panasonic offers a purposely engineered solution which allows for a quick and simple installation. The unit contains 5 actuating ball valves, a 30l storage vessel and PLC all housed in an IP54 rated container. Terminals on the front of the unit allow for easy wiring to the alarm terminal, Hi / Lo pressure transducers and discharge temperature sensor(s) of the condensing unit(s).

R22 Renewal

Panasonic's advanced technology enables the system to work with previously installed pipe work by managing the working pressure within the system down to R22 (33 bar) levels, this ensures the system works safely and efficiently without loss of capacity.
The new equipment can offer increased COP/EER by using state of the art inverter compressor and heat exchanger technology.
Having contacted your Panasonic supplier regarding pipe work restrictions and gained approval to use the Panasonic Renewal System there are three main tests that have to be carried out to ensure that the system can be used effectively. Firstly a thorough inspection of the pipe work must be carried out and any damage must be repaired. Secondly an oil test has to be carried out to ensure that the system has not been subject to a compressor burnout during its lifetime. Lastly a VRF Renewal Kit (CZ-SLK2) has to be installed within the pipe work to ensure that the system is cleaned of any remnants of oil.

Design Support Software for VRF

Features the unique Mounting Scheme function providing more thorough spec-in and tender quotation support for easier, faster completion of work

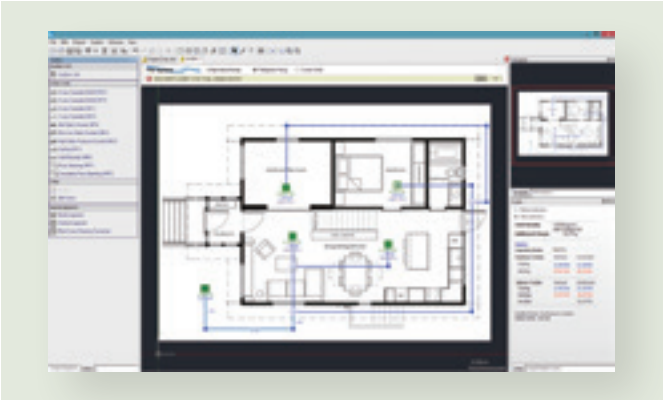

The Panasonic VRF Designer software can be used for all Panasonic VRF ME2, LE and MF3.
Panasonic has identified the importance of ever-increasing demands for fast and accurate responses to customer requests in our industry. More and more emphasis is being placed upon energy-efficiency in our marketplace. The ability to calculate cooling/heating loads and produce information of actual design conditions is a major advantage to any architect, consultant, contractor or end user.
Panasonic understands the time-poor and demanding industry we are in and we are pleased to announce the launch of the next generation of our system design software program.
The Panasonic VRF Designer software has been customised to make the selection and design process as quick and easy as possible.
The design package utilises system wizards and import tools to enable both simple and complex systems to be created. In addition, the system will allow outdoor and indoor units to be dragged on an interactive desktop. This allows users to create everything from realistic floor plans with detailed piping and wiring schematics to send out with quotations, through to installation guidance drawings.

Features include:
· Mounting scheme. Design selection from building floor drawing
· Any kind of drawing format. (dxf, jpg, png..etc.)
· Conventional principal scheme
· Easy to use system wizards
· Auto piping and wiring features
· Converted duties for conditions and pipework
· Auto(CAD) (dxf), Excel and PDF export
· Detailed wiring and pipework diagrams
· Automatic price quotation
· Automatic tender document assist
· SEER, SCOP
· ESEER

Panasonic's Advanced VRF software with AutoCAD® compatibility makes design easier than ever

Panasonic provides bespoke software helping system designers, installers and dealers to very quickly design and size systems, create wiring diagrams and issue bills of quantities at the push of a button.

Panasonic VRF Service Checker

Panasonic will make available to installers and commissioning companies the VRF Service Checker as a communication interface to Panasonic VRF systems. This easy to manage tool checks all parameters of the system.

The VRF Service Checker allows:
· On ECOi and Mini ECOi connect anywhere on the P-Link
· Search the P-Link to validate systems that are connected
· Monitor all indoor and outdoor units simultaneously on 1 screen
· Monitor all Temperature data, Pressure data, Valve position, and alarm status on 1 screen
· Data can be viewed in Graph or number format
· Controlling the indoor unit ON/OFF, MODE, SET POINT, FAN, and TEST mode
· Switching between various systems on same communication P-Link (ECOi only)
· Monitor and record at a set interval time
· Record and review the data at a later date
· Update software as ROM flash writer

This Panasonic VRF Service Checker is available from your service partner.

Interface Box

VRF Systems indoor units

ECOi and ECO G systems indoor units range

Page		1,5 kW	2,2 kW	2,8 kW	3,0 kW	3,6 kW	4,0 kW	4,5 kW
P. 288	U2 Type 4 Way 90x90 Cassette		S-22MU2E5A	S-28MU2E5A		S-36MU2E5A		S-45MU2E5A
P. 290	Y2 Type 4 Way 60x60 Cassette	S-15MY2E5A	S-22MY2E5A	S-28MY2E5A		S-36MY2E5A		S-45MY2E5A
P. 291	L1 Type 2 Way Cassette		S-22ML1E5	S-28ML1E5		S-36ML1E5		S-45ML1E5
P. 292	D1 Type 1 Way Cassette			S-28MD1E5		S-36MD1E5		S-45MD1E5
P. 293	F2 Type Variable Static Pressure Hide Away	S-15MF2E5A	S-22MF2E5A	S-28MF2E5A		S-36MF2E5A		S-45MF2E5A
P. 294	M1 Type Slim Variable Static Pressure Hide Away	S-15MM1E5A	S-22MM1E5A	S-28MM1E5A		S-36MM1E5A		S-45MM1E5A
P. 295	E2 Type High Static Pressure Hide Away							
P. 296	Heat Recovery with DX Coil				PAW-500ZDX3N		PAW-800ZDX3N	PAW-01KZDX3N
P. 297	T2 Type Ceiling					S-36MT2E5A		S-45MT2E5A
P. 298	G1 Type Floor Console		S-22MG1E5A	S-28MG1E5A		S-36MG1E5A		S-45MG1E5A
P. 300	K2 Type Wall-mounted	S-15MK2E5A	S-22 mK2E5A	S-28MK2E5A		S-36MK2E5A		S-45MK2E5A
P. 301	P1 Type Floor-standing		S-22MP1E5	S-28MP1E5		S-36MP1E5		S-45MP1E5
P. 302	R1 Type Concealed Floor-standing		S-22MR1E5	S-28MR1E5		S-36MR1E5		S-45MR1E5
P. 303	Hydrokit for ECOi, water at 45 °C							

Page		16,0 kW	28,0 kW	56,0 kW	84,0 kW	112,0 kW	140,0 kW	168,0 kW
P. 310	AHU Connection Kit 16, 28 and 56 kW	PAW-160MAH2/M/L	PAW-280MAH2/M/L	PAW-560MAH2/M/L	PAW-280MAH2/M/L + PAW-560MAH2/M/L	PAW-560MAH2/M/L x2	PAW-280MAH2/M/L + PAW-560MAH2/M/L x2	PAW-560MAH2/M/L x3

Page		250 m³/h	350 m³/h	500 m³/h	800 m³/h	1000 m³/h
P. 314	Energy Recovery Ventilation	FY-250ZDY8R	FY-350ZDY8R	FY-500ZDY8R	FY-800ZDY8R	FY-01KZDY8R

5,6 kW	6,0 kW	7,3 kW	9,0 kW	10,6 kW	14,0 kW	16,0 kW	22,4 kW	28,0 kW
S-56MU2E5A	S-60MU2E5A	S-73MU2E5A	S-90MU2E5A	S-106MU2E5A	S-140MU2E5A	S-160MU2E5A		
S-56MY2E5A								
S- 56ML1E5		S-73ML1E5						
S-56MD1E5		S-73MD1E5						
S-56MF2E5A	S-60MF2E5A	S-73MF2E5A	S-90MF2E5A	S-106MF2E5A	S-140MF2E5A	S-160MF2E5A		
S-56MM1E5A								
							S-224ME2E5	S-280ME2E5
S-56MT2E5A		S-73MT2E5A		S-106MT2E5A	S-140MT2E5A			
S-56MG1E5A								
S-56MK2E5A		S-73MK2E5A		S-106MK2E5A				
S-56MP1E5		S-71MP1E5						
S-56MR1E5		S-71MR1E5						
			S-80MW1E5		S-125MW1E5			

Page		7,9 kW	12,0 kW	15,0 kW	19,0 kW	23,6 kW	27,6 kW
P. 312	Air Curtain LS type with DX Coil	PAW-10EAIRC-LS	PAW-15EAIRC-LS	PAW-20EAIRC-LS	PAW-25EAIRC-LS		
P. 312	Air Curtain HS type with DX Coil		PAW-10EAIRC-HS	PAW-15EAIRC-HS		PAW-20EAIRC-HS	PAW-25EAIRC-HS

4 Way 90x90 Cassette with nanoe™ X

Large capacity VRF. Trusted power and high efficiency.

These Cassettes offer upgraded Econavi and nanoe™ X systems as accessories for making application space more comfortable, healthy and efficient.

Thanks to advances in design and technology such as the new high performance turbo fan which is more efficient and silent, and nanoe™ X system, for total healthy and the floor temperature & humidity sensor to more control, the U2 Panasonic 4 Way 90x90 Cassette offers healthy and comfort.

Always fresh and clean air with nanoe™ X

The nanoe™ X is available with the advanced technology of room air conditioning.

- This unique technology operation can work simultaneously or independently from heating/cooling operation.
- Inhibiting certain viruses, bacteria & deodorisation (bacteria, fungus, pollen, virus and cigarette smoke). OH radicals in nanoe™ X pull bacteria's hydrogen out to effectively deodorise and sterilise
- Clean inside by nanoe™ X + Dry control: inside of indoor unit can be cleaned by short operation circuit with nanoe™ X and drying

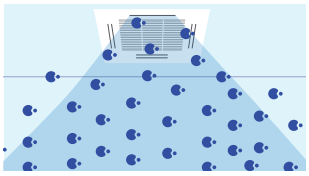

CZ-RTC5B and optional accessory CZ-CNEXU1 are required to use nanoe™ X function.

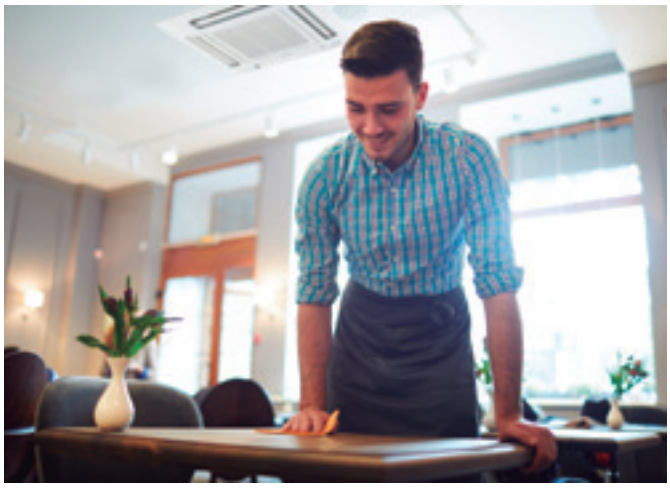

Econavi intelligent sensor

Human activity sensor and floor temperature sensor can reduce waste of energy by optimising air conditioner operation.

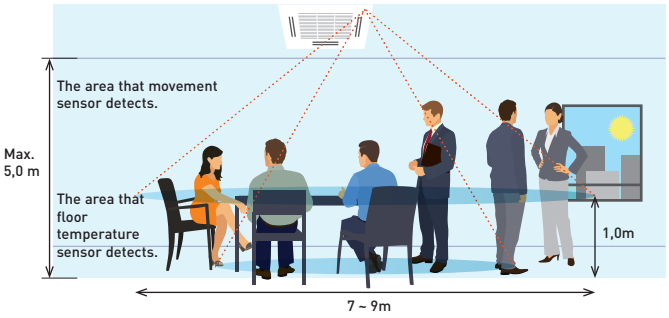

Advanced Econavi functions.

2 sensors (movement and floor temperature) can provide a reduction in wasted energy by means of effective control. Floor temperature can be detected with a ceiling height of 5 m.

Econavi exclusive panel. Optional (CZ-KPU3AW)

Floor temperature sensor.
This sensor detects average floor temperature and operates circulation if floor temperature is low.

Movement sensor.
This sensor detects the amount of human activity, and operates effectively.

Wired remote controller CZ-RTC5B is required.

Humidity sensor.

Humidity sensor has air suction function, and realises comfort and energy saving based on temperature and humidity.

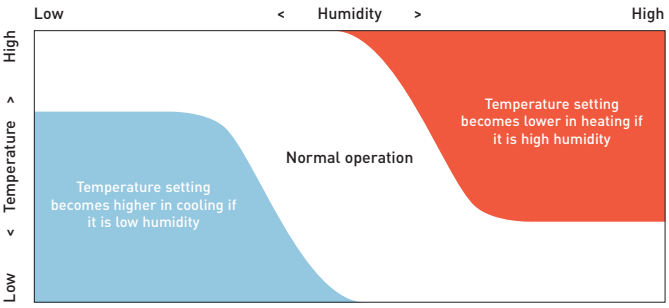

Group control, circulation function.

Circulating operation is activated when a room is unoccupied to evenly distribute air and minimize temperature gaps in both heating and cooling operation.

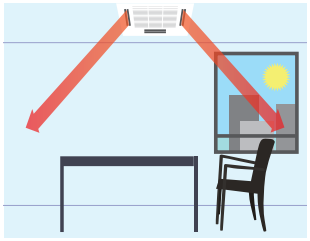

Circulation by Detecting no movement (10 min.)

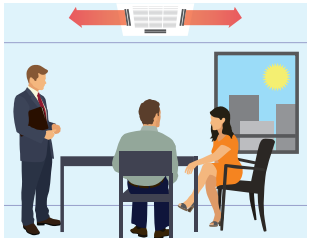

Indirect air flow by detecting movement.

U2 Type 4 Way 90x90 Cassette

The 4 Way 90x90 Cassettes with new panel design and 2 types of body with height difference.

CZ-KPU3W
Standard panel.

CZ-KPU3AW
Optional Econavi panel (CZ-RTC5B is required).

CZ-CNEXU1
Optional nanoe™ X kit (CZ-RTC5B is required).

PAW-RE2C4
Optional Controller.
Control for hotel application.

CZ-RTC6
CZ-RTC6BL
Optional Controller.
Wired remote controller.

CZ-RTC5B
Optional Controller.
Wired remote controller.
Compatible with Econavi.

CZ-RWS3 +
CZ-RWRU3W
Optional Controller.
Infrared remote controller.

Technical focus

- High performance turbo fan, new path system for heat exchanger
- Lower noise in slow fan operation
- Ceiling height up to 5,0 m
- Industry top light weight, easy piping
- Econavi: Floor temperature and humidity sensor added. Activity amount detection and new circulator
- nanoe™ X inhibits pollutants such as certain bacteria and viruses, and deodorises the environment. This patented technology is equipped in commercial range for the first time. Inside cleaning by nanoe™ X + Dry control
- Powerful drain pump gives 850 mm lift
- Fresh air knockout
- Branch duct connection
- Optional air-intake plenum CZ-FDU2

Model			S-22MU2E5A	S-28MU2E5A	S-36MU2E5A	S-45MU2E5A	S-56MU2E5A	S-60MU2E5A	S-73MU2E5A	S-90MU2E5A	S-106MU2E5A	S-140MU2E5A	S-160MU2E5A
Cooling capacity		kW	2,2	2,8	3,6	4,5	5,6	6,0	7,3	9,0	10,6	14,0	16,0
Input power cooling		W	20,00	20,00	20,00	20,00	25,00	35,00	40,00	40,00	95,00	100,00	115,00
Current (cool)		A	0,19	0,19	0,19	0,19	0,22	0,31	0,33	0,36	0,71	0,76	0,89
Heating capacity		kW	2,5	3,2	4,2	5,0	6,3	7,1	8,0	10,0	11,4	16,0	18,0
Input power heating		W	20,00	20,00	20,00	20,00	25,00	35,00	40,00	40,00	85,00	100,00	105,00
Current (heat)		A	0,17	0,17	0,17	0,17	0,20	0,30	0,32	0,34	0,65	0,73	0,80
Fan type			Turbo fan	Turbo fan	Turbo fan	Turbo fan	Turbo fan	Turbo fan	Turbo fan	Turbo fan	Turbo fan	Turbo fan	Turbo fan
Air volume	Hi/Med/Lo	m³/min	14,50/13,00/11,50	14,50/13,00/11,50	14,50/13,00/11,50	15,50/13,00/11,50	17,00/13,50/11,50	21,00/16,00/13,00	22,50/16,00/13,00	23,00/18,50/14,00	35,00/26,00/20,00	36,00/27,00/21,50	37,00/29,00/25,00
Sound pressure / power	Hi/Med/Lo	dB(A) / dB	30/29/28 45/44/43	30/29/28 45/44/43	30/29/28 45/44/43	31/29/28 46/44/43	33/30/28 48/45/43	36/32/29 51/47/44	37/32/29 52/47/44	38/35/32 53/50/47	44/38/34 59/53/49	45/39/35 60/54/50	46/40/38 61/55/53
Dimension (H x W x D)	Indoor (Panel)	mm	256 x 840 x 840 (33,5 x 950 x 950)	256 x 840 x 840 (33,5 x 950 x 950)	256 x 840 x 840 (33,5 x 950 x 950)	256 x 840 x 840 (33,5 x 950 x 950)	256 x 840 x 840 (33,5 x 950 x 950)	256 x 840 x 840 (33,5 x 950 x 950)	256 x 840 x 840 (33,5 x 950 x 950)	256 x 840 x 840 (33,5 x 950 x 950)	319 x 840 x 840 (33,5 x 950 x 950)	319 x 840 x 840 (33,5 x 950 x 950)	319 x 840 x 840 (33,5 x 950 x 950)
		mm											
Net weight (Panel)		kg	19 (5)	19 (5)	19 (5)	19 (5)	19 (5)	20 (5)	20 (5)	20 (5)	25 (5)	25 (5)	25 (5)
Piping connections	Liquid	Inch (mm)	1/4 (6,35)	1/4 (6,35)	1/4 (6,35)	1/4 (6,35)	1/4 (6,35)	3/8 (9,52)	3/8 (9,52)	3/8 (9,52)	3/8 (9,52)	3/8 (9,52)	3/8 (9,52)
	Gas	Inch (mm)	1/2 (12,70)	1/2 (12,70)	1/2 (12,70)	1/2 (12,70)	1/2 (12,70)	5/8 (15,88)	5/8 (15,88)	5/8 (15,88)	5/8 (15,88)	5/8 (15,88)	5/8 (15,88)

Panel design

Flat design, well-matched with interior, building.
Position of 4 air wings can be set individually.

2 types of body with height difference (same as current ones)

25,6cm and 31,9cm.

Panasonic introduces a modern flat panel design to blend into any space. These Cassettes have been developed to satisfy today's customer needs such as high energy saving, comfort and healthier air.

The drain pipe can be raised to a maximum height of 850 mm from the bottom of the ceiling

Do not attempt to raise it higher than 850 mm.
Doing so will result in water leakage.

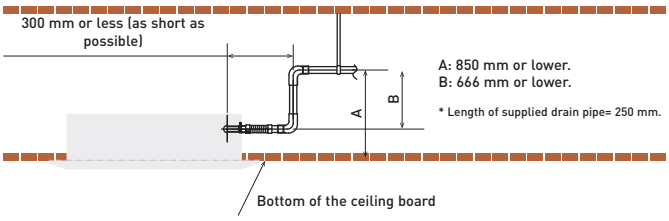

28% ECONAVI | nanoeX | SELF-DIAGNOSING | AUTOMATIC FAN | HUMIDITY CONTROL MILD DRY | AUTO-FLAP CONTROL | AUTOMATIC RESTART | AIR SWEEP | BUILT-IN DRAIN PUMP | OPTIONAL WLAN | BMS CONNECTIVITY

ECONAVI, nanoe™ X and INTERNET CONTROL: Optional.

Rating Conditions: Cooling Indoor 27 °C DB / 19 °C WB. Cooling Outdoor 35 °C DB / 24 °C WB. Heating Indoor 20 °C DB. Heating Outdoor 7 °C DB / 6 °C WB. (DB: Dry Bulb; WB: Wet Bulb).
Specifications subject to change without notice. For detailed information about ErP / Energy Labelling, please visit our websites www.aircon.panasonic.eu or www.ptc.panasonic.eu.

Y2 Type 4 Way 60x60 Cassette

CZ-KPY3AW
Panel 700 x 700 mm.

CZ-KPY3BW
Panel 625 x 625 mm.

Designed to fit exactly into a 600 x 600 mm ceiling grid without the need to alter the bar configuration

The Y2 is ideal for small commercial and retrofit applications. In addition, the improvements to efficiency make this one of the most advanced units in the industry.

Technical focus

- Mini Cassette fits into a 600 x 600 mm ceiling grid
- Fresh air distribution
- Multidirectional airflow
- Powerful drain pump gives 850 mm lift
- Turbo fans and heat exchanger fins with improved design
- DC-Fan motors with variable speed, new heat exchangers, etc. ensure an efficient power consumption

PAW-RE2C4
Optional Controller.
Control for hotel application.

CZ-RTC6
CZ-RTC6BL
Optional Controller.
Wired remote controller.

CZ-RTC5B
Optional Controller.
Wired remote controller.
Compatible with Econavi.

CZ-CENSC1
Optional Econavi Sensor.

CZ-RWS3
Optional Controller.
Infrared remote controller.

Model			S-15MY2E5A	S-22MY2E5A	S-28MY2E5A	S-36MY2E5A	S-45MY2E5A	S-56MY2E5A
Cooling capacity		kW	1,5	2,2	2,8	3,6	4,5	5,6
Input power cooling		W	35,00	35,00	35,00	40,00	40,00	45,00
Operating current cooling		A	0,30	0,30	0,30	0,30	0,32	0,35
Heating capacity		kW	1,7	2,5	3,2	4,2	5,0	6,3
Input power heating		W	30,00	30,00	30,00	35,00	35,00	40,00
Operating current heating		A	0,25	0,25	0,30	0,30	0,30	0,30
Fan type			Centrifugal fan	Centrifugal fan	Centrifugal fan	Centrifugal fan	Centrifugal fan	Centrifugal fan
Air volume (Hi / Med / Lo)	Cool	m^3/min	8,90/8,20/5,60	9,10/8,20/5,60	9,30/8,40/5,60	9,70/8,70/6,00	10,00/9,30/8,20	10,40/9,80/8,50
	Heat	m^3/min	9,10/8,40/5,60	9,30/8,40/5,60	9,60/8,70/5,60	9,90/9,10/6,00	10,30/9,60/8,20	11,10/9,80/8,70
Sound pressure	Hi / Med / Lo	dB(A)	34/31/25	35/31/25	35/31/25	36/32/26	38/34/28	40/37/34
Sound power	Hi / Med / Lo	dB	49/46/40	50/46/40	50/46/40	51/47/41	53/49/43	55/52/49
Dimension (H x W x D)	Indoor	mm	288 x 583 x 583	288 x 583 x 583	288 x 583 x 583	288 x 583 x 583	288 x 583 x 583	288 x 583 x 583
	Panel 3A	mm	31 x 700 x 700	31 x 700 x 700	31 x 700 x 700	31 x 700 x 700	31 x 700 x 700	31 x 700 x 700
	Panel 3B	mm	31 x 625 x 625	31 x 625 x 625	31 x 625 x 625	31 x 625 x 625	31 x 625 x 625	31 x 625 x 625
Net weight		kg	20,4 (18 + 2,4)	20,4 (18 + 2,4)	20,4 (18 + 2,4)	20,4 (18 + 2,4)	20,4 (18 + 2,4)	20,4 (18 + 2,4)
Piping connections	Liquid pipe	Inch (mm)	1/4 (6,35)	1/4 (6,35)	1/4 (6,35)	1/4 (6,35)	1/4 (6,35)	1/4 (6,35)
	Gas pipe	Inch (mm)	1/2 (12,70)	1/2 (12,70)	1/2 (12,70)	1/2 (12,70)	1/2 (12,70)	1/2 (12,70)

A drain height of approximately 850 mm from the ceiling surface

The drain height can be increased by approximately 350 mm over the conventional value by using a high-lift drain pump, and long horizontal piping is possible.
A lightweight unit at 18,4kg the unit is also very slim with a height of only 288 mm, making installation possible even in narrow ceilings.

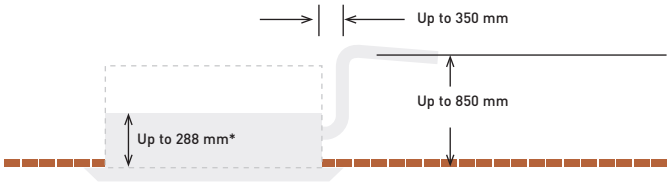

28% ECONAVI | SELF-DIAGNOSING | AUTOMATIC FAN | HUMIDITY CONTROL DRY | AUTO-FLAP CONTROL | AUTOMATIC RESTART | AIR SWEEP | BUILT-IN DRAIN PUMP | OPTIONAL WLAN | BMS CONNECTIVITY

ECONAVI and INTERNET CONTROL: Optional.

L1 Type 2 Way Cassette

CZ-02KPL2
Panel.

CZ-03KPL2
Panel for S-73ML1E5).

Slim, compact and lightweight units

Remarkable size and weight reductions have been achieved by improvement of the design around the fan, the weight of all models now being 30kg.

Technical focus

- Airflow and distribution is automatically altered depending on the operational mode of the unit
- Drain up is possible up to 500 mm from the drain port
- Simple maintenance

Simple maintenance

The drain pan is equipped with site wiring and can be removed. The fan case has a split construction, and the fan motor can be removed easily when the lower case is removed.

PAW-RE2C4
Optional Controller.
Control for hotel application.

CZ-RTC6
CZ-RTC6BL
Optional Controller.
Wired remote controller.

CZ-RTC5B
Optional Controller.
Wired remote controller.
Compatible with Econavi.

CZ-RWS3 +
CZ-RWRL3
Optional Controller.
Infrared remote controller.

Model			S-22ML1E5	S-28ML1E5	S-36ML1E5	S-45ML1E5	S-56ML1E5	S-73ML1E5
Cooling capacity		kW	2,2	2,8	3,6	4,5	5,6	7,3
Input power cooling		W	90,00	92,00	93,00	97,00	97,00	145,00
Operating current cooling		A	0,45	0,45	0,45	0,45	0,45	0,65
Heating capacity		kW	2,5	3,2	4,2	5,0	6,3	8,0
Input power heating		W	58,00	60,00	61,00	65,00	65,00	109,00
Operating current heating		A	0,29	0,29	0,29	0,29	0,29	0,48
Fan type			Sirocco fan	Sirocco fan	Sirocco fan	Sirocco fan	Sirocco fan	Sirocco fan
Air volume	Hi / Med / Lo	m³/min	8,00/7,00/6,00	9,00/8,00/7,00	9,70/8,70/7,70	11,00/9,00/8,00	11,00/9,00/8,00	19,00/16,00/14,00
Sound pressure	Hi / Med / Lo	dB(A)	30/27/24	33/29/26	34/31/28	35/33/29	35/33/29	38/35/33
Dimension (H x W x D)	Indoor	mm	350 x 840 x 600	350 x 840 x 600	350 x 840 x 600	350 x 840 x 600	350 x 840 x 600	350 x 1140 x 600
	Panel	mm	8 x 1060 x 680	8 x 1060 x 680	8 x 1060 x 680	8 x 1060 x 680	8 x 1060 x 680	8 x 1360 x 680
Net weight (Panel)		kg	26,0 (8,0)	26,0 (8,0)	26,0 (8,0)	26,0 (8,0)	26,0 (8,0)	26,0 (8,0)
Piping connections	Liquid pipe	Inch (mm)	1/4 (6,35)	1/4 (6,35)	1/4 (6,35)	1/4 (6,35)	1/4 (6,35)	3/8 (9,52)
	Gas pipe	Inch (mm)	1/2 (12,70)	1/2 (12,70)	1/2 (12,70)	1/2 (12,70)	1/2 (12,70)	5/8 (15,88)

Auto flap control

Airflow and distribution is automatically altered depending on the operational mode of the unit.

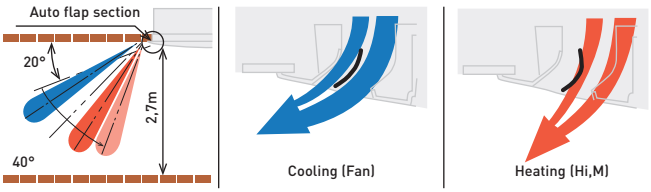

Drain up is possible up to 500 mm from the drain port

Maintenance of the drain pump is possible from two sides, from the left side (piping side) and from the inside of the unit.

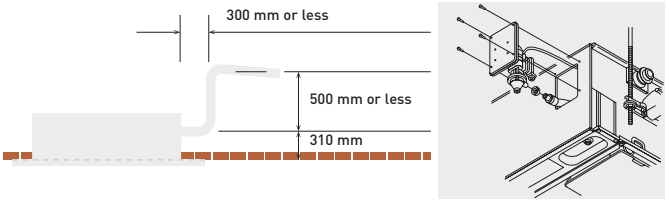

SELF-DIAGNOSING | AUTOMATIC FAN | HUMIDITY CONTROL DRY | AUTO-FLAP CONTROL | AUTOMATIC RESTART | AIR SWEEP | BUILT-IN DRAIN PUMP | OPTIONAL WLAN | BMS CONNECTIVITY

INTERNET CONTROL: Optional.

Rating Conditions: Cooling Indoor 27 °C DB / 19 °C WB. Cooling Outdoor 35 °C DB / 24 °C WB. Heating Indoor 20 °C DB. Heating Outdoor 7 °C DB / 6 °C WB. (DB: Dry Bulb; WB: Wet Bulb).
Specifications subject to change without notice. For detailed information about ErP / Energy Labelling, please visit our websites www.aircon.panasonic.eu or www.ptc.panasonic.eu.

D1 Type 1 Way Cassette

Designed for installation within the ceiling void, the D1 range of slimline 1 way blow Cassettes feature powerful yet quiet fans for up to 4,2 m.

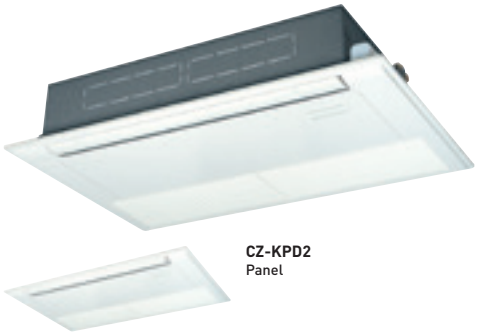

CZ-KPD2
Panel

Technical focus

- Ultra-Slim
- Suitable for standard and high ceilings
- Built-in drain pump provides 590 mm lift
- Easy to install and maintain
- Hanging height can be easily adjusted
- Uses a DC-Fan motor to improve energy-efficiency

PAW-RE2C4
Optional Controller.
Control for hotel application.

CZ-RTC6
CZ-RTC6BL
Optional Controller.
Wired remote controller.

CZ-RTC5B
Optional Controller.
Wired remote controller.
Compatible with Econavi.

CZ-RWS3 +
CZ-RWRD3
Optional Controller.
Infrared remote controller.

Model			S-28MD1E5	S-36MD1E5	S-45MD1E5	S-56MD1E5	S-73MD1E5
Cooling capacity		kW	2,8	3,6	4,5	5,6	7,3
Input power cooling		W	51,00	51,00	51,00	60,00	87,00
Operating current cooling		A	0,39	0,39	0,39	0,46	0,70
Heating capacity		kW	3,2	4,2	5,0	6,3	8,0
Input power heating		W	40,00	40,00	40,00	48,00	76,00
Operating current heating		A	0,35	0,35	0,35	0,41	0,65
Fan type			Sirocco fan	Sirocco fan	Sirocco fan	Sirocco fan	Sirocco fan
Air volume	Hi / Med / Lo	m³/min	12,00 / 10,00 / 9,00	12,00 / 10,00 / 9,00	12,00 / 11,00 / 10,00	13,00 / 11,50 / 10,00	18,00 / 15,00 / 13,00
Sound pressure	Hi / Med / Lo	dB(A)	36 / 34 / 33	36 / 34 / 33	36 / 35 / 34	38 / 36 / 34	45 / 40 / 36
Dimension (H x W x D)	Indoor	mm	200 x 1000 x 710	200 x 1000 x 710	200 x 1000 x 710	200 x 1000 x 710	200 x 1000 x 710
	Panel	mm	20 x 1230 x 800	20 x 1230 x 800	20 x 1230 x 800	20 x 1230 x 800	20 x 1230 x 800
Net weight (Panel)		kg	23,5 (7,5)	23,5 (7,5)	23,5 (7,5)	23,5 (7,5)	24,5 (7,5)
Piping connections	Liquid pipe	Inch (mm)	1/4 (6,35)	1/4 (6,35)	1/4 (6,35)	1/4 (6,35)	3/8 (9,52)
	Gas pipe	Inch (mm)	1/2 (12,70)	1/2 (12,70)	1/2 (12,70)	1/2 (12,70)	5/8 (15,88)

Drain height

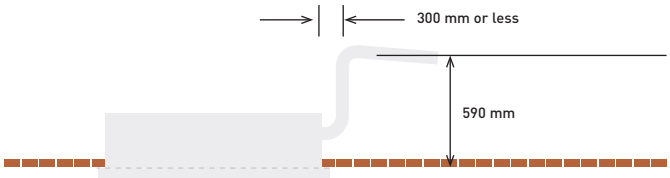

With 3 types of air-blow systems, the units can be used in various ways

1. One-direction "down-blow" system.
Powerful one-direction "down-blow" system reaches the floor even from high ceilings (up to 4,2 m).

2. Two-direction ceiling-mounted system.
"Down-blow" and "front-blow" systems are combined in a ceiling-mounted unit to blow air over a wide area.

3. One-direction ceiling-mounted system.
This powerful ceiling-mounted "front-blow" system efficiently air-conditions the space in front of the unit. (Additional accessories required).

INTERNET CONTROL: Optional.

F2 Type Variable Static Pressure Hide Away

The F2 type is designed specifically for applications requiring fixed square ducting

The internal filter is equipped as standard.

Technical focus

- Industry-leading low sound levels from 25dB(A)
- Built-in drain pump provides 785 mm lift
- Easy to install and maintain
- Air OFF sensor avoids cold air dumping
- Configurable air temperature control

Air inlet Plenum	Dampers diameters	Model
15, 22, 28, 36, 45 & 56	2 x Ø200	CZ-DUMPA56MF2
60, 73 & 90	3 x Ø200	CZ-DUMPA90MF2
106, 140 & 160	4 x Ø200	CZ-DUMPA160MF2

PAW-RE2C4
Optional Controller.
Control for hotel application.

CZ-RTC6
CZ-RTC6BL
Optional Controller.
Wired remote controller.

CZ-RTC5B
Optional Controller.
Wired remote controller.
Compatible with Econavi.

CZ-CENSC1
Optional Econavi Sensor.

CZ-RWS3 +
CZ-RWRC3
Optional Controller.
Infrared remote controller.

Model			S-15MF2E5A	S-22MF2E5A	S-28MF2E5A	S-36MF2E5A	S-45MF2E5A	S-56MF2E5A	S-60MF2E5A	S-73MF2E5A	S-90MF2E5A	S-106MF2E5A	S-140MF2E5A	S-160MF2E5A
Cooling capacity		kW	1,5	2,2	2,8	3,6	4,5	5,6	6,0	7,3	9,0	10,6	14,0	16,0
Input power cooling		W	70,00	70,00	70,00	70,00	70,00	100,00	120,00	120,00	135,00	195,00	215,00	225,00
Current (cool)		A	0,57	0,57	0,57	0,57	0,57	0,74	0,89	0,89	0,97	1,30	1,44	1,50
Heating capacity		kW	1,7	2,5	3,2	4,2	5,0	6,3	7,1	8,0	10,0	11,4	16,0	18,0
Input power heating		W	70,00	70,00	70,00	70,00	70,00	100,00	120,00	120,00	135,00	200,00	210,00	225,00
Current (heat)		A	0,57	0,57	0,57	0,57	0,57	0,74	0,89	0,89	0,97	1,34	1,42	1,50
Fan type			Sirocco fan	Sirocco fan	Sirocco fan	Sirocco fan	Sirocco fan	Sirocco fan	Sirocco fan	Sirocco fan	Sirocco fan	Sirocco fan	Sirocco fan	Sirocco fan
Air volume [1]	Hi/Med/Lo	m³/min	14,00/13,00/9,00	14,00/13,00/9,00	14,00/13,00/9,00	14,00/13,00/9,00	14,00/13,00/10,00	16,00/15,00/12,00	21,00/19,00/15,00	21,00/19,00/15,00	25,00/23,00/19,00	32,00/26,00/21,00	34,00/29,00/23,00	36,00/32,00/25,00
External static pressure		Pa	70 (10-150)	70 (10-150)	70 (10-150)	70 (10-150)	70 (10-150)	70 (10-150)	70 (10-150)	70 (10-150)	70 (10-150)	100 (10-150)	100 (10-150)	100 (10-150)
Sound pressure / power	Hi/Med/Lo	dB(A) / dB	33/29/22 55/51/44	33/29/22 55/51/44	33/29/22 55/51/44	33/29/22 55/51/44	34/32/25 56/54/47	34/32/25 56/54/47	35/32/26 57/54/48	35/32/26 57/54/48	37/34/28 59/56/50	38/34/31 60/56/53	39/35/32 61/57/54	40/36/33 62/58/55
Dimension / Net weight	H x W x D	mm/kg	290 x 800 x 700/29	290 x 800 x 700/29	290 x 800 x 700/29	290 x 800 x 700/29	290 x 800 x 700/29	290 x 800 x 700/29	290 x 1000 x 700/34	290 x 1000 x 700/34	290 x 1000 x 700/34	290 x 1400 x 700/46	290 x 1400 x 700/46	290 x 1400 x 700/46
Piping connections	Liquid	Inch (mm)	1/4 (6,35)	1/4 (6,35)	1/4 (6,35)	1/4 (6,35)	1/4 (6,35)	1/4 (6,35)	3/8 (9,52)	3/8 (9,52)	3/8 (9,52)	3/8 (9,52)	3/8 (9,52)	3/8 (9,52)
	Gas	Inch (mm)	1/2 (12,70)	1/2 (12,70)	1/2 (12,70)	1/2 (12,70)	1/2 (12,70)	1/2 (12,70)	5/8 (15,88)	5/8 (15,88)	5/8 (15,88)	5/8 (15,88)	5/8 (15,88)	5/8 (15,88)

1) Value referred to standard settings at shipment (H curve 8, M curve 5, L curve 1).

More powerful drain pump

Using a high-lift drain pump, drain piping can be elevated up to 785 mm from the base of the unit.

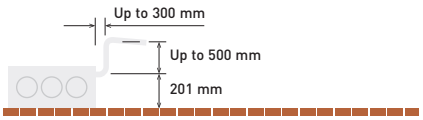

F2 Advantages

Automatic learning function for the required static pressure, to be activated easily by the standard wired timer remote controller.
Possible to increase the sensible cooling capacity by adjusting the air volume flow in order to almost completely eliminate latent losses. This is possible due to the outstanding big heat exchanger surface in combination with increasing the air volume flow by a manual selection of higher fan speed curves through the standard wired remote controller when commissioning the system together with the default active off-coil temperature control and the room load based variable evaporation temperature control.

Diagram 1 S-22MF2E5A

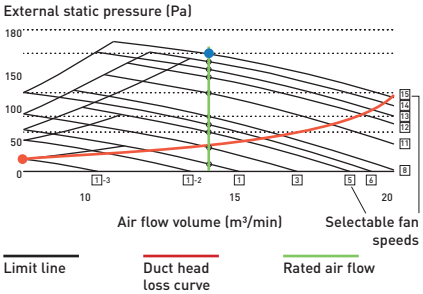

28% ECONAVI | FILTER INCLUDED | SELF-DIAGNOSING | AUTOMATIC FAN | HUMIDITY CONTROL DRY | AUTOMATIC RESTART | BUILT-IN DRAIN PUMP | OPTIONAL WLAN | BMS CONNECTIVITY

ECONAVI and INTERNET CONTROL: Optional.

Rating Conditions: Cooling Indoor 27 °C DB / 19 °C WB. Cooling Outdoor 35 °C DB / 24 °C WB. Heating Indoor 20 °C DB. Heating Outdoor 7 °C DB / 6 °C WB. (DB: Dry Bulb; WB: Wet Bulb).
Specifications subject to change without notice. For detailed information about ErP / Energy Labelling, please visit our websites www.aircon.panasonic.eu or www.ptc.panasonic.eu.

M1 Type Slim Variable Static Pressure Hide Away Concealed Duct

The ultra slim M1 type is one of the leading products of its type in the industry

With a depth of only 200 mm it provides greater flexibility and can be used in far more applications. In addition, its high-efficiency and extremely quiet sound levels make it very popular with many users, including hotels and small offices.

Technical focus

- Ultra-slim profile: 200 mm for all models
- DC-Fan motor greatly reduces power consumption
- Ideal for hotel application with very narrow false ceilings
- Easy maintenance and service by external electrical box
- 40 Pa static pressure enables ductwork to be fitted.
- Includes drain pump

PAW-RE2C4
Optional Controller.
Control for hotel application.

CZ-RTC6
CZ-RTC6BL
Optional Controller.
Wired remote controller.

CZ-RTC5B
Optional Controller.
Wired remote controller.
Compatible with Econavi.

CZ-CENSC1
Optional Econavi Sensor.

CZ-RWS3 + CZ-RWRC3
Optional Controller.
Infrared remote controller.

Model			S-15MM1E5A	S-22MM1E5A	S-28MM1E5A	S-36MM1E5A	S-45MM1E5A	S-56MM1E5A
Cooling capacity		kW	1,5	2,2	2,8	3,6	4,5	5,6
Input power cooling		W	36,00	36,00	40,00	42,00	49,00	64,00
Operating current cooling		A	0,26	0,26	0,30	0,31	0,37	0,48
Heating capacity		kW	1,7	2,5	3,2	4,2	5,0	6,3
Input power heating		W	26,00	26,00	30,00	32,00	39,00	54,00
Operating current heating		A	0,23	0,23	0,27	0,28	0,34	0,45
Fan type			Sirocco fan	Sirocco fan	Sirocco fan	Sirocco fan	Sirocco fan	Sirocco fan
Air volume	Hi / Med / Lo	m³/min	8,00/7,00/6,00	8,00/7,00/6,00	8,50/7,50/6,50	9,00/8,00/7,00	10,50/9,50/8,00	12,50/11,50/10,00
External static pressure		Pa	10 (30)	10 (30)	15 (30)	15 (40)	15 (40)	15 (40)
Sound pressure	Hi / Med / Lo [1]	dB(A)	28/27/25 (30/29/27)	28/27/25 (30/29/27)	30/29/27 (32/31/29)	32/30/28 (34/32/30)	34/32/30 (36/34/32)	35/33/31 (37/35/32)
Sound power	Hi / Med / Lo	dB	43/42/40	43/42/40	45/44/42	47/45/43	49/47/45	50/48/46
Dimension	H x W x D	mm	200 x 750 x 640	200 x 750 x 640	200 x 750 x 640	200 x 750 x 640	200 x 750 x 640	200 x 750 x 640
Net weight		kg	19	19	19	19	19	19
Piping connections	Liquid pipe	Inch (mm)	1/4 (6,35)	1/4 (6,35)	1/4 (6,35)	1/4 (6,35)	1/4 (6,35)	1/4 (6,35)
	Gas pipe	Inch (mm)	1/2 (12,70)	1/2 (12,70)	1/2 (12,70)	1/2 (12,70)	1/2 (12,70)	1/2 (12,70)

1) By DIP switches or by RC setting.

Air Outlet & Inlet Plenum

	Diameters	Air Outlet Plenum	Diameters	Air Inlet Plenum
22 , 28 & 36	2 x Ø200	CZ-DUMPA22MMS2	2 x Ø200	CZ-DUMPA22MMR2
45 & 56	3 x Ø160	CZ-DUMPA45MMS3	2 x Ø200	CZ-DUMPA22MMR3

Ultra-slim profile for all models

200 mm

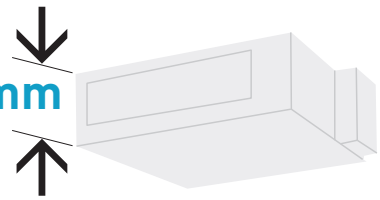

Drain pump with increased power!

By adoption of a high-lift drain pump, the drain piping rise height can be increased to 785 mm from the lower surface of the body.

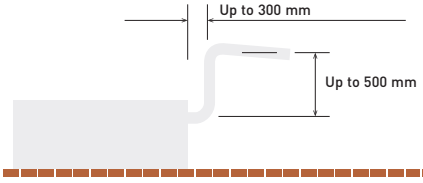

28% ECONAVI | FILTER INCLUDED | SELF-DIAGNOSING | AUTOMATIC FAN | HUMIDITY CONTROL DRY | AUTOMATIC RESTART | BUILT-IN DRAIN PUMP | OPTIONAL WLAN | BMS CONNECTIVITY

ECONAVI and INTERNET CONTROL: Optional.

E2 Type High Static Pressure Hide Away

High pressure duct and 100 % Fresh air duct function. The E2 range of ducted units offers improved design flexibility for extended duct layouts as a result of their increased external static pressures and reduces energy consumption.

Technical focus

- No need of rap valve
- 100 % Fresh air duct function
- DC-Fan motor for more savings
- Complete flexibility for ductwork design
- Can be located into a weatherproof housing for external sitting
- Air OFF sensor avoids cold air dumping
- Configurable air temperature control

PAW-RE2C4
Optional Controller.
Control for hotel application.

CZ-RTC6
CZ-RTC6BL
Optional Controller.
Wired remote controller.

CZ-RTC5B
Optional Controller.
Wired remote controller.
Compatible with Econavi.

CZ-RWS3 +
CZ-RWRC3
Optional Controller.
Infrared remote controller.

Model			100 % Fresh air duct function (by using Kit for 100 % Fresh air)				High pressure duct			
			S-224ME2E5		S-280ME2E5		S-224ME2E5		S-280ME2E5	
			Cooling	Heating	Cooling	Heating	Cooling	Heating	Cooling	Heating
Capacity		kW	22,4	21,2	28,0	26,5	22,4	25,0	28,0	31,5
Input power		W	290,00	290,00	350,00	350,00	440,00	440,00	715,00	715,00
Operating current		A	1,85	1,85	2,20	2,20	2,45	2,45	3,95	3,95
Air volume	Hi / Med / Lo	m³/min	28,30 / — / —		35,00 / — / —		56,00 / 51,00 / 44,00		72,00 / 63,00 / 53,00	
External static pressure		Pa	200		200		140 (60 - 270) [1]		140 (72 - 270) [1]	
Sound pressure [2]	Hi / Med / Lo	dB(A)	43 / — / —		44 / — / —		45 / 43 / 41		49 / 47 / 43	
Sound power	Hi / Med / Lo	dB	75 / — / —		76 / — / —		77 / 75 / 73		81 / 79 / 75	
Dimension	H x W x D	mm	479 x 1453 x 1205		479 x 1453 x 1205		479 x 1453 x 1205		479 x 1453 x 1205	
Net weight		kg	102		106		102		106	
Piping connections	Liquid pipe	Inch (mm)	3/8 (9,52)		3/8 (9,52)		3/8 (9,52)		3/8 (9,52)	
	Gas pipe	Inch (mm)	3/4 (19,05)		7/8 (22,22)		3/4 (19,05)		7/8 (22,22)	

Rating Conditions for 100 % Fresh air duct function: Cooling Outdoor 33 °C DB / 28 °C WB. Heating Outdoor 0 °C DB / -2,9 °C WB. 1) Available to select the setting by initial setup. 2) Values with 140 Pa setting.
* No filter included. No compatible with 3-Pipe ECO G GF3.

System example

An inspection port (450 x 450 mm or more) is required at the lower side of the indoor unit body (field supply).

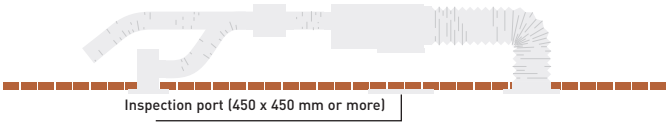

100 % Fresh air duct function

The E2 duct with 100 % fresh air duct function have exceptional discharge temperature.

	Discharge Range		
	Min	Max	Default
Cooling	15 °C	24 °C	18 °C
Heating	17 °C	**45 °C**	40 °C

Plenums

Air Outlet Plenum (suitable for rigid + flexible duct)		
	Number of exits with diameters	Model
S-224ME2E5 / S-280ME2E5	1 x 500 mm	CZ-TREMIESPW706

Kit for 100 % Fresh air function

For 2-Pipe systems		For 3-Pipe systems	
2x CZ-P160RVK2	Rap valve kit	2x CZ-P160HR3	3-Pipe valve kit
2x CZ-CAPE2	3-Pipe control PCB	2x CZ-CAPE2	3-Pipe control PCB
P680BK2BM	Distribution Joint kit	P680BH2BM	Distribution Joint kit
1x Remote control		1x Remote control	

ECONAVI and INTERNET CONTROL: Optional.

Rating Conditions: Cooling Indoor 27 °C DB / 19 °C WB. Cooling Outdoor 35 °C DB / 24 °C WB. Heating Indoor 20 °C DB. Heating Outdoor 7 °C DB / 6 °C WB. (DB: Dry Bulb; WB: Wet Bulb).
Specifications subject to change without notice. For detailed information about ErP / Energy Labelling, please visit our websites www.aircon.panasonic.eu or www.ptc.panasonic.eu.

Heat Recovery With DX Coil

Motorised heat recovery by-pass device automatically controlled by unit control to use fresh air free-cooling when convenient.

- Galvanized steel self-supporting panels, internally and externally insulated
- High efficiency enthalpic heat recover, static cross flow type, made by membrane with high moisture permeability, good air tightness, excellent tear resistance, and aging resistance, it is structures with flat plates and corrugated plates. Total heat exchange with temperature efficiency up to 76 % and enthalpy efficiency up to 67 %, also at high level during summer season
- ISO16890 ePm2,5 95 % (F9 EN 779) efficiency class filter with synthetic cleanable media and COARSE 50 % (G3 EN 779) pre-filter ON fresh air, COARSE 50 % filter on return air intake
- Removable side panel to access filters and heat recovery in the event of scheduled maintenance
- Low consumption, high efficiency & low noise direct driven fans
- Supply section complete with DX Coil (R410A) fitted with solenoid control valve, freon filter, contact temperature sensors on liquid and gas line, NTC sensors upstream and downstream airflow
- Built-in electric box equipped with PCB to control internal fan speed and to interconnect outdoor/indoor units
- Duct connection by circular plastic collars

PAW-RE2C4
Optional Controller.
Control for hotel application.

CZ-RTC6
CZ-RTC6BL
Optional Controller.
Wired remote controller.

CZ-RTC5B
Optional Controller.
Wired remote controller.
Compatible with Econavi.

Model			PAW-500ZDX3N		PAW-800ZDX3N		PAW-01KZDX3N	
Power source	Voltage	V	230		230		230	
	Phase		Single Phase		Single Phase		Single Phase	
	Frequency	Hz	50		50		50	
Air volume		m³/min	8,33		13,33		16,67	
External static pressure [1]		Pa	90		120		115	
Maximum current	Total full load	A	0,6		1,4		2,1	
Input power		W	150		320		390	
Sound pressure [2]		dB(A)	39		42		43	
Piping connections	Liquid pipe	Inch (mm)	1/4 (6,35)		1/4 (6,35)		1/4 (6,35)	
	Gas pipe	Inch (mm)	1/2 (12,70)		1/2 (12,70)		1/2 (12,70)	
Heat recovery			**Cooling**	**Heating**	**Cooling**	**Heating**	**Cooling**	**Heating**
Temperature efficiency		%	76	76	76	76	76	76
Enthalpy efficiency		%	63	67	63	65	60	62
Saved power summer mode or winter mode*		kW	1,70	4,30 (4,80)	2,50	6,50 (7,30)	3,20	8,20 (9,00)
DX Coil								
Total / Sensible capacity		kW	3,00 / 2,10	2,50 / 2,70	5,10 / 3,50	4,40 / 4,80	5,80 / 4,10	5,20 / 6,70
Off temperature		°C	15,9	28,0 (27,3)	15,5	29,6 (29,0)	16,2	28,5 (27,8)
Off relative humidity		%	90	16 (15)	90	14 (13)	89	15 (14)

Nominal summer conditions: Outside air: 32 °C DB, RH 50 %. Ambient air: 26 °C DB, RH 50 %. Nominal winter conditions: Outside air: -5 °C DB, RH 80 %. Ambient air: 20 °C DB, RH 50 %. Cooling mode air inlet condition: 28,5 °C DB, RH 50 %; evaporating temperature 7 °C. Heating mode air inlet condition: 13 °C DB, RH 40 % (11 °C DB, RH 45 %); condensating temperature 40 °C. DB: Dry Bulb; RH: Relative Humidity. 1) Referred to the nominal air flow after filter and plate heat exchanger. 2) Sound pressure level calculated at 1 m far from: ducted supply exhaust air ducted return - first air intake / service side, at normal condition. * Tentative data.

Balanced ventilation

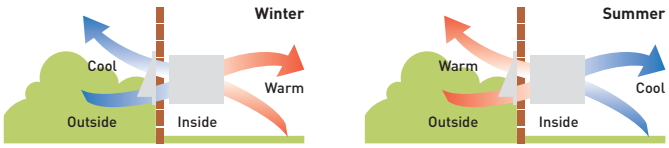

Interconnection to outdoor/indoor units

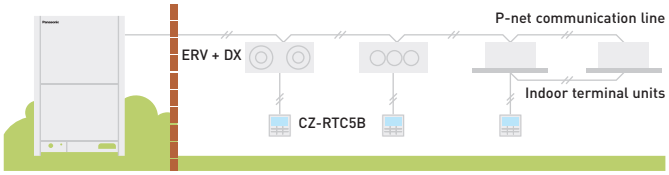

Characteristic curves

The following curves show the unit external static pressure at maximum fan speed for each model.

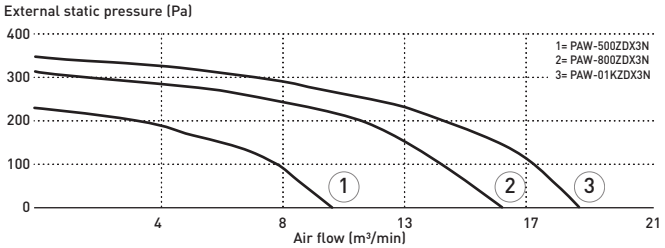

SELF-DIAGNOSING | AUTOMATIC FAN | HUMIDITY CONTROL DRY | AUTOMATIC RESTART | BUILT-IN DRAIN PUMP | OPTIONAL WLAN | BMS CONNECTIVITY

INTERNET CONTROL: Optional.

T2 Type Ceiling

The T2 Type Ceiling mounted units feature a DC-Fan motor for increased efficiency and reduced operating sound levels

All the units are the same height and depth for a uniform appearance in mixed installations and feature a fresh air knockout for improved air quality.

Technical focus

- Low sound levels
- New design, all units just 235 mm high
- Large and wide air distribution
- Easy to install and maintain
- Fresh air knockout

PAW-RE2C4
Optional Controller.
Control for hotel application.

CZ-RTC6
CZ-RTC6BL
Optional Controller.
Wired remote controller.

CZ-RTC5B
Optional Controller.
Wired remote controller.
Compatible with Econavi.

CZ-CENSC1
Optional Econavi Sensor.

CZ-RWS3 + CZ-RWRT3
Optional Controller.
Infrared remote controller.

Model			S-36MT2E5A	S-45MT2E5A	S-56MT2E5A	S-73MT2E5A	S-106MT2E5A	S-140MT2E5A
Cooling capacity		kW	3,6	4,5	5,6	7,3	10,6	14,0
Input power cooling		W	35,00	40,00	40,00	55,00	80,00	100,00
Operating current cooling		A	0,36	0,38	0,38	0,44	0,67	0,79
Heating capacity		kW	4,2	5,0	6,3	8,0	11,4	16,0
Input power heating		W	35,00	40,00	40,00	55,00	80,00	100,00
Operating current heating		A	0,36	0,38	0,38	0,44	0,67	0,79
Fan type			Sirocco fan	Sirocco fan	Sirocco fan	Sirocco fan	Sirocco fan	Sirocco fan
Air volume	Hi / Med / Lo	m³/min	14,00/12,00/10,50	15,00/12,50/10,50	15,00/12,50/10,50	21,00/18,00/15,50	30,00/25,00/23,00	32,00/28,00/24,00
Sound pressure	Hi / Med / Lo	dB(A)	36/32/30	37/33/30	37/33/30	39/35/33	42/37/36	46/40/37
Sound power	Hi / Med / Lo	dB	54/50/48	55/51/48	55/51/48	57/53/51	60/55/54	62/58/55
Dimension	H x W x D	mm	235 x 960 x 690	235 x 960 x 690	235 x 960 x 690	235 x 1275 x 690	235 x 1590 x 690	235 x 1590 x 690
Net weight		kg	27	27	27	33	40	40
Piping connections	Liquid pipe	Inch (mm)	1/4 (6,35)	1/4 (6,35)	1/4 (6,35)	3/8 (9,52)	3/8 (9,52)	3/8 (9,52)
	Gas pipe	Inch (mm)	1/2 (12,70)	1/2 (12,70)	1/2 (12,70)	5/8 (15,88)	5/8 (15,88)	5/8 (15,88)

Air distribution is altered depending on the operational mode

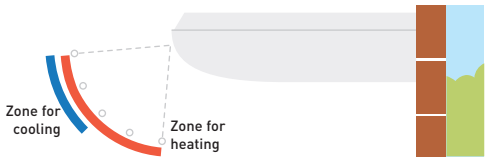

Further comfort improvement with airflow distribution

Horizontal air flow reaches maximum 9,5 m. This is ideal for wide rooms.
The wide air discharge opening expands the air flow to the left and the right. The unpleasant feeling caused when the air flow directly hits the human body is prevented by the "Draft prevention position", which changes the swing width, so that the degree of comfort is increased.

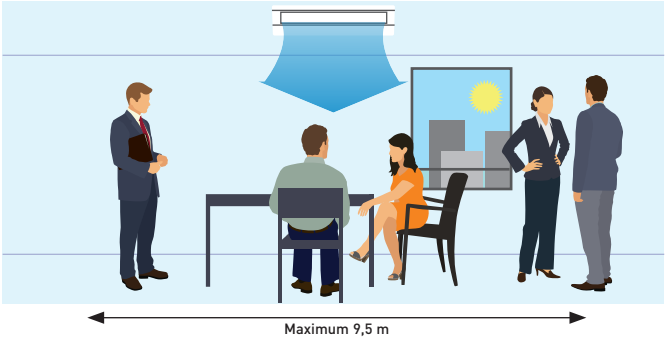

ECONAVI and INTERNET CONTROL: Optional.

Rating Conditions: Cooling Indoor 27 °C DB / 19 °C WB. Cooling Outdoor 35 °C DB / 24 °C WB. Heating Indoor 20 °C DB. Heating Outdoor 7 °C DB / 6 °C WB. (DB: Dry Bulb; WB: Wet Bulb).
Specifications subject to change without notice. For detailed information about ErP / Energy Labelling, please visit our websites www.aircon.panasonic.eu or www.ptc.panasonic.eu.

VRF Floor Console

High end residential.

Cafe / Restaurant.

1 Stylish and simple

· Clean and modern European design with slim depth
· Modern matt white color panel
· Washable air filter

The stylish and compact unit profile, also used for residential market range, is easy to integrate into any design of building.

Dimension:
W x H x D = 750 x 600 x 207 mm

Weight:
14kg

2 Flexible easy installation

Four different mounting styles possible:
· Exposed (floor or wall)
· Semi-recessed
· Recessed

Flexible installation with 4 different options.

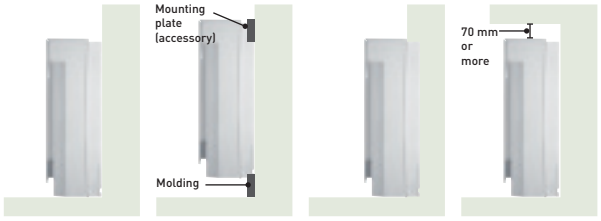

The compact unit can be installed within a limited space, such as under a window. Thus, it is a perfect solution to replace an existing boiler system radiator.

3 Functions for comfort

· Double Air Flow direction to maximize comfort
· Self-cleaning function
· Compatible with New Commercial WLAN Adaptor for cloud control

Self-cleaning function.
· Self cleaning function can be pre-scheduled with remote controller, up to a maximum of 90 minutes following cooling/dry operation
· Air flow will not blow directly at occupants during self-cleaning

Double Air Flow direction.

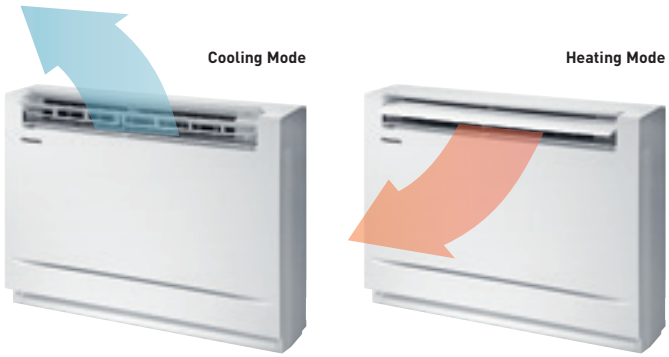

G1 Type Floor Console

The stylish and compact unit profile, also used for residential market range, is easy to integrate into any design of building

Compact and versatile, this system is capable of being installed in an area with limited space.
It is a perfect solution for retrofit, replacing existing radiator panels.

Technical focus

- Clean and stylish design with slim depth
- Modern matt white color panel
- Flexible and easy installation
- Washable air filter
- Quiet operation
- Dry mode to reduce humidity in rooms
- New Cloud Control "Comfort Cloud" compatible

PAW-RE2C4
Optional Controller.
Control for hotel application.

CZ-RTC6
CZ-RTC6BL
Optional Controller.
Wired remote controller.

CZ-RTC5B
Optional Controller.
Wired remote controller.
Compatible with Econavi.

CZ-CENSC1
Optional Econavi Sensor.

CZ-RWS3
Optional Controller.
Infrared remote controller.

Model			S-22MG1E5A	S-28MG1E5A	S-36MG1E5A	S-45MG1E5A	S-56MG1E5A
Cooling capacity		kW	2,2	2,8	3,6	4,5	5,6
Input power cooling		W	18,00	18,00	20,00	26,00	29,00
Operating current cooling		A	0,18	0,18	0,21	0,23	0,25
Heating capacity		kW	2,5	3,2	4,2	5,0	6,3
Input power heating		W	19,00	19,00	21,00	27,00	30,00
Operating current heating		A	0,18	0,18	0,22	0,24	0,26
Fan type			Cross flow	Cross flow	Cross flow	Cross flow	Cross flow
Air volume	Cool (Hi / Med / Lo)	m³/min	9,20 / 7,50 / 6,00	9,20 / 7,50 / 6,00	9,70 / 8,20 / 6,00	10,50 / 9,00 / 6,50	12,00 / 9,50 / 6,50
	Heat (Hi / Med / Lo)	m³/min	9,70 / 8,00 / 6,50	9,70 / 8,00 / 6,50	10,20 / 8,70 / 6,50	11,00 / 9,50 / 7,00	12,50 / 10,00 / 7,00
Sound pressure	Hi / Med / Lo	dB(A)	38 / 34 / 29	38 / 34 / 29	39 / 35 / 29	42 / 37 / 30	44 / 38 / 30
Dimension	H x W x D	mm	600 x 750 x 207	600 x 750 x 207	600 x 750 x 207	600 x 750 x 207	600 x 750 x 207
Net weight		kg	14	14	14	14	14
Piping connections	Liquid pipe	Inch (mm)	1/4 (6,35)	1/4 (6,35)	1/4 (6,35)	1/4 (6,35)	1/4 (6,35)
	Gas pipe	Inch (mm)	1/2 (12,70)	1/2 (12,70)	1/2 (12,70)	1/2 (12,70)	1/2 (12,70)

* Infrared remote controller (CZ-RWS3) doesn't need receiver as an optional. Receiver is included in the unit shipment.

Simple operation design for easy to use

Washable air filter

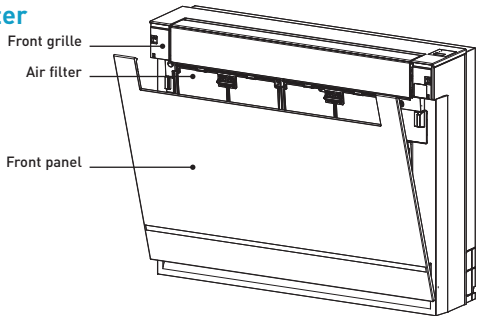

28% ECONAVI | SELF-DIAGNOSING | AUTOMATIC FAN | HUMIDITY CONTROL DRY | AUTOMATIC RESTART | OPTIONAL WLAN | BMS CONNECTIVITY

ECONAVI and INTERNET CONTROL: Optional.

Rating Conditions: Cooling Indoor 27 °C DB / 19 °C WB. Cooling Outdoor 35 °C DB / 24 °C WB. Heating Indoor 20 °C DB. Heating Outdoor 7 °C DB / 6 °C WB. (DB: Dry Bulb; WB: Wet Bulb).
Specifications subject to change without notice. For detailed information about ErP / Energy Labelling, please visit our websites www.aircon.panasonic.eu or www.ptc.panasonic.eu.

K2 Type Wall-mounted

The Wall-mounted unit has a stylish smooth panel that looks good and easy to clean

The unit is also smaller, lighter and substantially quieter than previous models making it ideal for small offices and other commercial applications.

Technical focus

- Closed discharge port
- Lighter and smaller units make the installation easy
- Quiet operation
- Smooth and durable design
- Piping outlet in three directions
- Air distribution is automatically altered depending on the operational mode

PAW-RE2C4
Optional Controller.
Control for hotel application.

CZ-RTC6
CZ-RTC6BL
Optional Controller.
Wired remote controller.

CZ-RTC5B
Optional Controller.
Wired remote controller.
Compatible with Econavi.

CZ-CENSC1
Optional Econavi Sensor.

CZ-RWS3
Optional Controller.
Infrared remote controller.

Model			S-15MK2E5A	S-22 mK2E5A	S-28MK2E5A	S-36MK2E5A	S-45MK2E5A	S-56MK2E5A	S-73MK2E5A	S-106MK2E5A
Cooling capacity		kW	1,5	2,2	2,8	3,6	4,5	5,6	7,3	10,6
Input power cooling		W	25,00	25,00	25,00	30,00	30,00	35,00	55,00	80,00
Operating current cooling		A	0,20	0,21	0,23	0,25	0,32	0,35	0,51	0,70
Heating capacity		kW	1,7	2,5	3,2	4,2	5,0	6,3	8,0	11,4
Input power heating		W	25,00	25,00	25,00	30,00	30,00	35,00	55,00	80,00
Operating current heating		A	0,20	0,21	0,23	0,25	0,32	0,35	0,51	0,70
Fan type			Cross flow	Cross flow	Cross flow	Cross flow	Cross flow	Cross flow	Cross flow	Cross flow
Air volume Hi / Med / Lo	Cool	m³/min	7,90/7,40/6,50	9,00/7,50/6,50	9,50/8,30/6,50	10,90/9,00/6,50	14,50/12,50/10,00	16,00/14,00/12,00	19,50/17,00/14,00	21,50/18,50/15,00
	Heat	m³/min	9,00/7,70/6,80	9,20/8,30/6,80	9,70/8,50/6,80	11,20/9,50/6,80	14,50/12,50/10,00	16,00/14,00/12,00	19,50/17,00/14,00	21,50/18,50/15,00
Sound pressure	Hi / Med / Lo	dB(A)	34/32/29	36/33/29	37/34/29	40/36/29	38/35/33	40/37/35	47/44/40	49/46/42
Sound power	Hi / Med / Lo	dB	49/47/44	51/48/44	52/49/44	55/51/44	53/50/48	55/52/50	62/59/55	64/61/57
Dimension	H x W x D	mm	290 x 870 x 214	290 x 870 x 214	290 x 870 x 214	290 x 870 x 214	302 x 1120 x 236	302 x 1120 x 236	302 x 1120 x 236	302 x 1120 x 236
Net weight		kg	9	9	9	9	13	13	14	14
Piping connections	Liquid pipe	Inch (mm)	1/4 (6,35)	1/4 (6,35)	1/4 (6,35)	1/4 (6,35)	1/4 (6,35)	1/4 (6,35)	3/8 (9,52)	3/8 (9,52)
	Gas pipe	Inch (mm)	1/2 (12,70)	1/2 (12,70)	1/2 (12,70)	1/2 (12,70)	1/2 (12,70)	1/2 (12,70)	5/8 (15,88)	5/8 (15,88)

Closed discharge port

When the unit is turned OFF, the flap closes completely to prevent entry of dust into the unit and to keep the equipment clean. Lighter and smaller units make the installation easy. The width has been decreased by 17 % and the units are lighter.

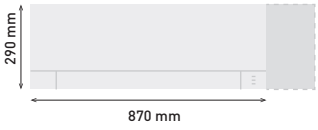

Air distribution is automatically altered depending on the operational mode of the unit

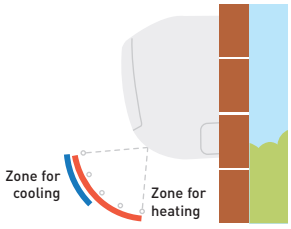

Piping outlet in six directions

Piping outlet is possible in the six directions of right, right rear, right bottom, left, left rear and left bottom, making the installation work easier.

Quiet operation

These units are among the quietest in the industry, making them ideal for hotels and hospitals.

External valve (Optional)

CZ-P56SVK2 (model sizes 15 to 56)
CZ-P160SVK2 (model sizes 73 to 106)

28% ECONAVI | SELF-DIAGNOSING | AUTOMATIC FAN | HUMIDITY CONTROL DRY | AUTO-FLAP CONTROL | AUTOMATIC RESTART | AIR SWEEP | OPTIONAL WLAN | BMS CONNECTIVITY

ECONAVI and INTERNET CONTROL: Optional.

P1 Type Floor-standing

The compact Floor-standing P1 units are the ideal solution for providing perimeter air conditioning

The standard wired controller can be incorporated into the body of the unit.

Technical focus

- Pipes can be connected to either side of the unit from the bottom or rear
- Easy to install
- Front panel opens fully for easy maintenance
- Removable air discharge grille gives flexible airflow
- Room for condensate pump
- For build-in remote control, only CZ-RTC2 is suitable

PAW-RE2C4
Optional Controller.
Control for hotel application.

CZ-RTC6
CZ-RTC6BL
Optional Controller.
Wired remote controller.

CZ-RTC5B
Optional Controller.
Wired remote controller.
Compatible with Econavi.

CZ-RTC2
Optional Controller.
Timer remote controller.
For Floor-standing (P1) indoor units.

CZ-RWS3 +
CZ-RWRC3
Optional Controller.
Infrared remote controller.

Model			S-22MP1E5	S-28MP1E5	S-36MP1E5	S-45MP1E5	S-56MP1E5	S-71MP1E5
Cooling capacity		kW	2,2	2,8	3,6	4,5	5,6	7,1
Input power cooling		W	56,00	56,00	85,00	126,00	126,00	160,00
Operating current cooling		A	0,25	0,25	0,38	0,56	0,56	0,72
Heating capacity		kW	2,5	3,2	4,2	5,0	6,3	8,0
Input power heating		W	40,00	40,00	70,00	91,00	91,00	120,00
Operating current heating		A	0,18	0,18	0,31	0,41	0,41	0,54
Fan type			Sirocco fan	Sirocco fan	Sirocco fan	Sirocco fan	Sirocco fan	Sirocco fan
Air volume	Hi / Med / Lo	m³/min	7,00 / 6,00 / 5,00	7,00 / 6,00 / 5,00	9,00 / 7,00 / 6,00	12,00 / 9,00 / 8,00	15,00 / 13,00 / 11,00	17,00 / 14,00 / 12,00
External static pressure		Pa	15	15	15	15	15	15
Sound pressure	Hi / Med / Lo	dB(A)	33 / 30 / 28	33 / 30 / 28	39 / 35 / 29	38 / 35 / 31	39 / 36 / 31	41 / 38 / 35
Dimensions	H x W x D	mm	615 x 1065 x 230	615 x 1065 x 230	615 x 1065 x 230	615 x 1380 x 230	615 x 1380 x 230	615 x 1380 x 230
Net weight		kg	29	29	29	39	39	39
Piping connections	Liquid pipe	Inch (mm)	1/4 (6,35)	1/4 (6,35)	1/4 (6,35)	1/4 (6,35)	1/4 (6,35)	3/8 (9,52)
	Gas pipe	Inch (mm)	1/2 (12,70)	1/2 (12,70)	1/2 (12,70)	1/2 (12,70)	1/2 (12,70)	5/8 (15,88)

Effective perimeter handling

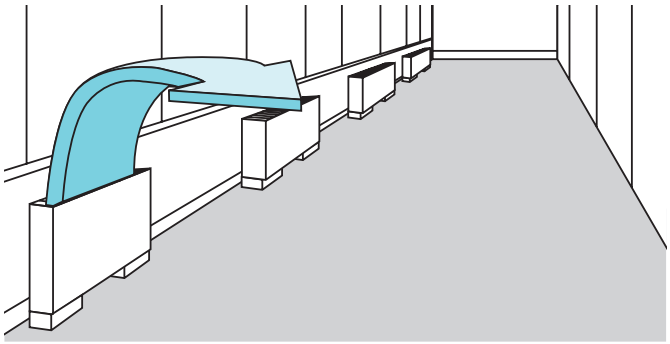

Effective perimeter handling

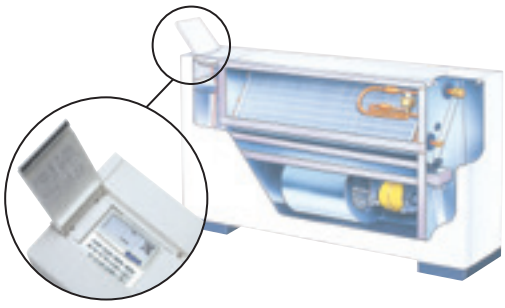

SELF-DIAGNOSING | AUTOMATIC FAN | HUMIDITY CONTROL DRY | AUTOMATIC RESTART | OPTIONAL WLAN | BMS CONNECTIVITY

INTERNET CONTROL: Optional.

Rating Conditions: Cooling Indoor 27 °C DB / 19 °C WB. Cooling Outdoor 35 °C DB / 24 °C WB. Heating Indoor 20 °C DB. Heating Outdoor 7 °C DB / 6 °C WB. (DB: Dry Bulb; WB: Wet Bulb).
Specifications subject to change without notice. For detailed information about ErP / Energy Labelling, please visit our websites www.aircon.panasonic.eu or www.ptc.panasonic.eu.

R1 Type Concealed Floor-standing

At just 229 mm deep, the R1 unit can be easily concealed in perimeter areas to provide powerful and effective air conditioning

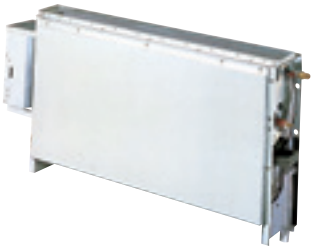

Technical focus

- Chassis unit for discreet installation
- Complete with removable filters
- Pipes can be connected to either side of the unit from the bottom or rear
- Easy to install

PAW-RE2C4
Optional Controller.
Control for hotel application.

CZ-RTC6
CZ-RTC6BL
Optional Controller.
Wired remote controller.

CZ-RTC5B
Optional Controller.
Wired remote controller.
Compatible with Econavi.

CZ-RWS3 +
CZ-RWRC3
Optional Controller.
Infrared remote controller.

Model			S-22MR1E5	S-28MR1E5	S-36MR1E5	S-45MR1E5	S-56MR1E5	S-71MR1E5
Cooling capacity		kW	2,2	2,8	3,6	4,5	5,6	7,1
Input power cooling		W	56,00	56,00	85,00	126,00	126,00	160,00
Operating current cooling		A	0,25	0,25	0,38	0,56	0,56	0,72
Heating capacity		kW	2,5	3,2	4,2	5,0	6,3	8,0
Input power heating		W	40,00	40,00	70,00	91,00	91,00	120,00
Operating current heating		A	0,18	0,18	0,31	0,41	0,41	0,54
Fan type			Sirocco fan	Sirocco fan	Sirocco fan	Sirocco fan	Sirocco fan	Sirocco fan
Air volume	Hi / Med / Lo	m³/min	7,00/6,00/5,00	7,00/6,00/5,00	9,00/7,00/6,00	12,00/9,00/8,00	15,00/13,00/11,00	17,00/14,00/12,00
External static pressure		Pa	15	15	15	15	15	15
Sound pressure	Hi / Med / Lo	dB(A)	33/30/28	33/30/28	39/35/29	38/35/31	39/36/31	41/38/35
Dimensions	H x W x D	mm	616 x 904 x 229	616 x 904 x 229	616 x 904 x 229	616 x 1219 x 229	616 x 1219 x 229	616 x 1219 x 229
Net weight		kg	21	21	21	28	28	28
Piping connections	Liquid pipe	Inch (mm)	1/4 (6,35)	1/4 (6,35)	1/4 (6,35)	1/4 (6,35)	1/4 (6,35)	3/8 (9,52)
	Gas pipe	Inch (mm)	1/2 (12,70)	1/2 (12,70)	1/2 (12,70)	1/2 (12,70)	1/2 (12,70)	5/8 (15,88)

Perimeter air conditioning with high interior quality

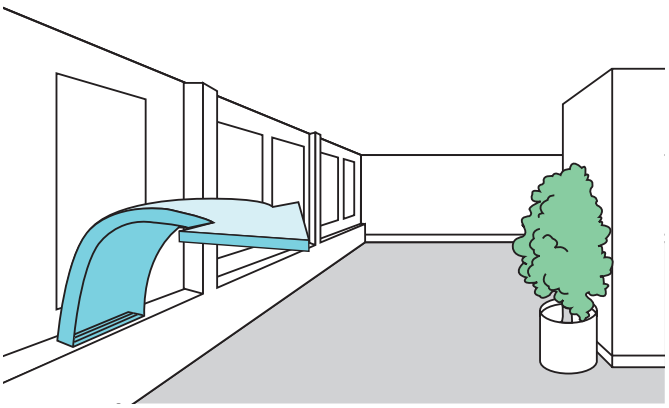

SELF-DIAGNOSING | AUTOMATIC FAN | HUMIDITY CONTROL DRY | AUTOMATIC RESTART | OPTIONAL WLAN | BMS CONNECTIVITY

INTERNET CONTROL: Optional.

Hydrokit for ECOi Water at 45 °C

Connect the Hydrokit to your VRF system, together with other indoor units

Basic principle & advantage.
Hydrokit module provides hot water by using waste heat that is recovered from standard air-conditioning indoor unit in cooling mode.
Total system performs high energy efficiency by this heat recovering operation, and it gives an advantage for sustainability related assessment methods, such as BREEAM in UK.

Technical focus

- Only with 3-Pipe ECOi EX MF3 Series outdoor units
- Remote controller CZ-RTC5B common use with DX Coil indoor units ECOi and PACi

PAW-RE2C4
Optional Controller.
Control for hotel application.

CZ-RTC5B
Optional Controller.
Wired remote controller.
Compatible with Econavi.

Model				S-80MW1E5	S-125MW1E5
Power source				230 V / Single Phase / 50 Hz	230 V / Single Phase / 50 Hz
Cooling capacity			kW	8,0	12,5
Heating capacity			kW	9,0	14,0
Maximum temperature			°C	~45 / ~65 [1]	~45 / ~65 [1]
Dimension	H x W x D		mm	892 x 502 x 353	892 x 502 x 353
Water pipe connector			Inch	R 1 ¼	R 1 ¼
Water pump (built-in)				DC motor (A class)	DC motor (A class)
Water flow rate	Cool		L/min	22,90	35,80
	Heat		L/min	25,80	40,10
Piping connections	Liquid pipe		Inch (mm)	3/8 (9,52)	3/8 (9,52)
	Gas pipe		Inch (mm)	5/8 (15,88)	5/8 (15,88)
	Drain piping			15 ~ 17 mm (inner size)	15 ~ 17 mm (inner size)
Operation range	Cool	Ambient	°C	+10 ~ +43	+10 ~ +43
		Water	°C	+5 ~ +20	+5 ~ +20
	Heat	Ambient	°C	-20 ~ +43	-20 ~ +43
		Water	°C	+25 ~ +45	+25 ~ +45
Connectable system				3-Pipe (heat recovery type) VRF System (system capable up to 48 HP)	
Maximum Indoor ratio (connectable hydrokit module capacity ratio)				Total indoor unit + Hydrokit capacity: up to 130 % (** ~ **% vs total outdoor unit capacity)	

1) Max 45 °C by refrigerant circuit (heat pump cycle), over 45 °C is provided by electric heater operation.

Hydrokit control function / CZ-RTC5B

- CZ-RTC5B is updated version from CZ-RTC3. It can be used for hydrokit and also normal indoor unit. CZ-RTC5B checks the type of connected unit and switch hydrokit or air conditioner style of display automatically
- Operating mode on hydrokit style to be set at initial setting of the system from following modes: tank mode or air conditioning mode

Overview: hydromodule in VRF system

- Multiple hydromodule connection in same circuit is available
- Each module can be set different operation mode either hot water supply mode or space heating mode (both operation modes are not able to set at 1 hydromodule)
- 3-Pipe control solenoid valve kit is necessary for each indoor unit and hydromodule

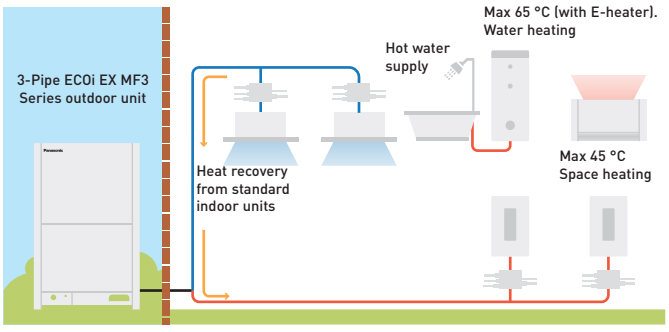

* Cold water also available.

Rating Conditions: Cooling Indoor 27 °C DB / 19 °C WB. Cooling Outdoor 35 °C DB / 24 °C WB. Heating Indoor 20 °C DB. Heating Outdoor 7 °C DB / 6 °C WB. (DB: Dry Bulb; WB: Wet Bulb).
Specifications subject to change without notice. For detailed information about ErP / Energy Labelling, please visit our websites www.aircon.panasonic.eu or www.ptc.panasonic.eu.

PRO-HT Tank Series for ECOi

MAXIMUM
65 °C
WATER OUTLET TEMPERATURE

PRO-HT Tank DHW. Big volume and high temperature tank for commercial application.

1 High performance and high saving

- A7 COP maximum 5,29 and 6,70 for ECOi 3-Pipe in case of heat recovery
- Efficient hot water production by heat recovery
- High temperature hot water without booster
- Save installation time and cost by skipping additional accessories

2 Hot water production with simultaneous heating and cooling

- Maximum water outlet temperature up to 65 °C without an electric heater
- Big volume tank from 750L to 1000L capacity
- Heat exchanger design inhibits limescale

3 Trusted quality

- Double tube heat exchanger following drinking-water regulation
- Tank and heat exchanger made with stainless steel
- Internal and external pickling

Solution example DHW tank 1000L + ECOi 3-Pipe mixed system

- Ideal offer for hotel projects
- DHW production under spontaneous heating and cooling
- Hot water up to 65 °C is efficiently produced by heat recovery
- A7 COP 6,70 considering heat recovery

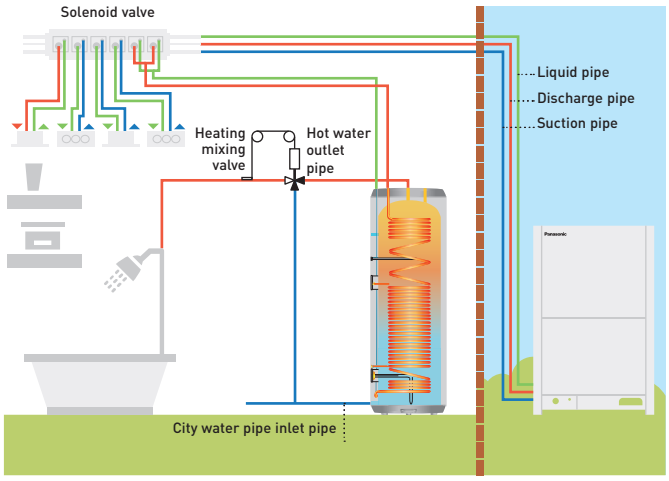

One by one system compatible list with ECOi

Model	Tank type	Product compatibility	Hot water outlet temperature
PAW-VP750LDHW-1	DHW	U-16MF3 (3-Pipe)	65 °C
PAW-VP1000LDHW-1	DHW	U-16MF3 (3-Pipe)	65 °C

PRO-HT Tank DHW

PRO-HT *TANK*

Enjoy an efficient DHW and heating and cooling tank

Panasonic commercial PRO-HT Tank solutions meet all needs of your hot water applications providing maximum water temperature 65 °C.

High temperature hot water is efficiently produced without any boosters.
Panasonic commercial PRO-HT Tank solutions can be combined with ECOi 3-Pipe to adapt various projects from high-end residentials to offices and hotels.

Technical focus

· Water volume 750L and 1000L
· Maximum hot water production 65 °C without boosters
· Heating coil 52 m (750L) and 63 m (1000L)
· Tank material 3 mm
· ABS external case

PRO-HT Tank			**PAW-VP750LDHW-1**	**PAW-VP1000LDHW-1**
Outdoor Unit			**U-16MF3E8**	**U-16MF3E8**
Volume		L	726	933
Height	H x W	mm	1855 x 990	2210 x 990
Connections to the water supply network			1 1/4"	1 1/4"
Net weight / with water		kg	179 / 929	191 / 1121
Nominal electrical power		kW	5,12	6,14
Reference tapping cycle			2XL	2XL
Energy consumption by chosen cycle A7 / W10-55		kWh	4,14	5,10
Energy consumption by chosen cycle A15 / W10-55		kWh	3,50	4,61
COP DHW (A7 / W10-55) EN 16147 [1]			5,29	4,81
COP DHW (A15 / W10-55) EN 16147 [2]			7,01	5,32
Standby input power according to EN16147		W/h	77	80
Sound pressure at 1 m		dB(A)	52	52
Quantity of refrigerant		Kg	8,3	8,3
Average insulation thickness		mm	100	100
Heat exchanger connection for inlet / outlet		Inch (mm)	1/2 (12,70) / 3/4 (19,05)	1/2 (12,70) / 3/4 (19,05)
Maximum power consumption without heater		kW	20,4	20,4
Maximum power consumption with heater		W	26,4	26,4
Number of electrical heaters x power		W	1 x 6000	1 x 6000
Voltage / Frequency		V / Hz	400 / 50	400 / 50
Electrical fuse rating		A	16	16
Moisture protection			IP 24	IP 24
Maximum pipe length		m	50	50
Elevation difference (in/out)		m	30/30	30/30
Operating range - outdoor temperature		°C	-20 ~ +35	-20 ~ +35
Maximum water temperature (heat pump)		°C	65	65
Maximum water temperature (electrical heater)		°C	85	85
Refrigerant (R410A) / CO_2 Eq.		kg / T	8,3 /17,1	8,3 /17,1

Accessories	
PAW-VP-RTC5B-VRF	Tank Controller for ECOi system
PAW-VP-VALV-160	Expansion valve kit 16 kW

Accessories	
PAW-VP-VALV-280	Expansion valve kit 28 kW

1) Heating of sanitary water up to 55 °C with inlet air temperature at 7 °C, humidity at 89 % and inlet water temperature at 10 °C. According to EN16147. 2) Heating of sanitary water up to 55 °C with inlet air temperature at 15 °C, humidity at 74 % and inlet water temperature at 10 °C. According to EN16147. 3) Following LOT2 (COMMISSION DELEGATED REGULATION (EU) No. 812/2013).

This product is designed to meet the European Drinking Directive 98/83/EC amended by 2015/1787/EU. The lifespan of the product is not guaranteed in the case of the use of groundwater, such as spring water or well water, the use of tap water when salt or other impurities are contained, nor in areas of acidic water quality. Maintenance and warranty costs related to these cases are the customer's responsibility.

* When connected as pressurised, safety valve is mandatory.

6,70 COP HIGH PERFORMANCE | DHW | 65°C OUTPUT WATER HIGH TEMPERATURE | -20°C OPERATION RANGE | 5 YEARS COMPRESSOR WARRANTY

Smart fan coils

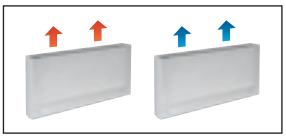

		PAW-AAIR-200-2			PAW-AAIR-700-2			PAW-AAIR-900-2		
Air flow	**Speed**	**Min**	**Med**	**Max**	**Min**	**Med**	**Max**	**Min**	**Med**	**Max**
Heating mode										
Total heating capacity	W	217,00	470,00	570,00	708,00	1032,00	1188,00	886,00	1420,00	1703,00
Water flow	kg/h	37,30	80,80	98,00	121,80	177,50	204,30	152,40	244,20	292,90
Water pressure drop	kPa	0,40	2,00	2,90	0,30	0,80	1,00	0,50	1,60	2,20
Inlet water temperature	°C	35	35	35	35	35	35	35	35	35
Outlet water temperature	°C	30	30	30	30	30	30	30	30	30
Inlet air temperature	°C	19,00	19,00	19,00	19,00	19,00	19,00	19,00	19,00	19,00
Outlet air temperature	°C	38,90	32,00	30,00	33,30	31,80	30,60	30,20	31,10	30,60
Cooling mode										
Total cooling capacity	W	237,00	345,00	555,00	756,00	1039,00	1204,00	1153,00	1518,00	1746,00
Sensible cooling capacity	W	230,00	314,00	504,00	646,00	903,00	1058,00	1061,00	1384,00	1598,00
Water flow	kg/h	40,00	59,00	95,00	129,00	178,00	207,00	198,00	261,00	300,00
Water pressure drop	kPa	0,40	2,00	2,90	1,00	2,00	2,00	6,00	9,00	12,00
Inlet water temperature	°C	10	10	10	10	10	10	10	10	10
Outlet water temperature	°C	15	15	15	15	15	15	15	15	15
Inlet air temperature	°C	27,00	27,00	27,00	27,00	27,00	27,00	27,00	27,00	27,00
Outlet air temperature	°C	15,00	17,00	18,00	14,00	16,00	17,00	16,00	17,00	18,00
Relative humidity of inlet air	%	47	47	47	47	47	47	47	47	47
Air flow	m³/min	0,90	1,90	2,70	2,60	4,20	5,30	4,10	6,10	7,70
Maximum input power	W	7,00	9,00	13,00	14,00	18,00	22,00	16,00	20,00	24,00
Sound pressure	dB(A)	23	33	40	24	36	42	25	36	44
Dimension (H x W x D)	mm		735 x 579 x 129			935 x 579 x 129			1135 x 579 x 129	
Net weight	kg		17			20			23	
3 Ways valve included			Yes			Yes			Yes	
Touch screen thermostat			Yes			Yes			Yes	

* Smart fan coils is produced by Innova.

Accessories	
PAW-AAIR-LEGS-1	Kits of 2 legs to support the Smart fan coil on the floor and to protect the water pipings

Accessories	
PAW-AAIR-RHCABLE	Motor connection cable for units with hydraulic connections on the right

Stylish Floor-standing fan coils with advanced controller

The slimline of Smart fan coils delivers high efficiency climate control.

With a depth of just under 13cm they are at the cutting edge of the market. Blending easily into the home, Smart fan coil's elegant design and product refinements are clear to see in every detail.

Exceptional ventilation efficiency means the motor uses considerably less energy (low wattage). The fan speed is continuously modulated by the temperature controller with proportional integral logic, with undoubted advantages for regulating the temperature and humidity in summer mode.

With standard cast radiators.

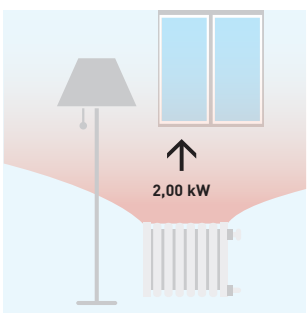

Water at 65 °C needed.

With Smart fan coil.

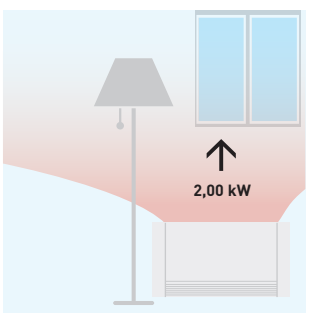

Water at 35 °C needed.

Technical focus:

- High heating capacity
- 3 fan speeds and capacities
- Exclusive design
- Extremely compact (only 12,9cm deep)
- Cooling and dehumidification functions possible (drain is needed)
- 3-way valve included (no overflow valve needed on the installation if more than 3 units installed)
- Touch screen thermostat

All temperature curves and capacity are available on www.panasonicproclub.com

Fan coils

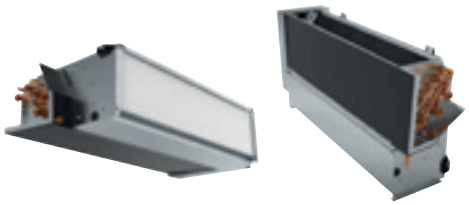

PAW-FC-903TC
Optional Controller.
Wired remote controller.

PAW-FC-RC1
Optional Controller.
Advanced wired remote controller.

			Compact units								High Static Pressure
Left side connection			PAW-FC-D11-1	PAW-FC-D15-1	PAW-FC-D24-1	PAW-FC-D28-1	PAW-FC-D40-1	PAW-FC-D55-1	PAW-FC-D65-1	PAW-FC-D90-1	PAW-FC-H150
Right side connection			PAW-FC-D11-1-R	PAW-FC-D15-1-R	PAW-FC-D24-1-R	PAW-FC-D28-1-R	PAW-FC-D40-1-R	PAW-FC-D55-1-R	PAW-FC-D65-1-R	PAW-FC-D90-1-R	PAW-FC-H150-R
Total cooling capacity [1]	Med/S-Hi	kW	1,0/1,5	1,2/1,7	2,0/2,5	2,4/3,2	3,2/4,6	4,6/5,8	6,1/7,3	6,1/8,1	11,9/14,8
Sensible cooling capacity [1]	Med/S-Hi	kW	0,8/1,1	0,9/1,3	1,5/1,9	1,8/2,3	2,2/3,3	3,3/4,5	4,3/5,1	4,6/6,3	9,6/12,9
Heating capacity [1]	Med/S-Hi	kW	1,4/2,0	1,5/2,2	2,4/3,1	2,9/4,0	4,1/5,7	5,3/7,1	7,9/9,3	8,1/11,6	14,9/19,9
Power consumption	S-Lo/Med/S-Hi	W	13/24/36	10/18/29	16/37/45	15/37/56	28/55/72	37/75/105	53/100/147	90/112/188	180/421/675
Fuse rating		A	2	2	2	2	2	2	2	2	6
Dimensions [2]	H x W x D	mm	220x570x430	220x570x430	220x753x430	220x938x430	220x1122x430	220x1307x430	220x1121x530	220x1316x530	376x1600x798
Weight [3]		kg	13	13	15	20	22	26	27	38	63
Sound power global	S-Lo/Med/S-Hi	dB(A)	33/40/49	31/43/50	30/45/52	30/44/51	34/46/56	38/51/58	43/56/61	50/55/64	52/64/71
Sound pressure global	S-Lo/Med/S-Hi	dB(A)	24/31/40	22/34/41	21/36/43	21/35/42	25/37/47	29/42/49	34/47/52	41/46/55	31/45/51
Static pressure	Max	Pa	30	30	50	50	70	70	70	70	110
Airflow [1]	Med/S-Hi	m³/h	190/283	179/265	274/390	357/499	486/716	640/933	893/1064	936/1397	2112/3176
Water pressure drop	Med/S-Hi	kPa	19,5/39,2	3,9/6,3	19,3/28,8	17,1/28	22,8/46,9	37,4/60,2	15,4/21,5	19,3/32,5	19,8/26,1
Fan speeds			3 speeds	3 speeds	3 speeds	3 speeds	3 speeds	3 speeds	3 speeds	3 speeds	3 speeds
Fan motor and number of speeds			AC 5 speeds	AC 5 speeds	AC 5 speeds	AC 5 speeds	AC 5 speeds	AC 5 speeds	AC 5 speeds	AC 5 speeds	AC 5 speeds
Drain pan and air filter			Included	Included	Included	Included	Included	Included	Included	Included	Included
Water connections		Inch	1/2	1/2	1/2	1/2	1/2	1/2	3/4	3/4	1

Accessories	
PAW-FC-RC1	Advanced wired remote controller for fan coil
PAW-FC-903TC	**NEW** Wired remote controller for fan coil (available from Spring 2020)
PAW-FC-2WY-11/55-1	2 way valve + drain pan (for PAW-FC-D11/15/24/28/40/55-1)
PAW-FC-2WY-65/90-1	2 way valve + drain pan (for PAW-FC-D65/90-1)

Accessories	
PAW-FC-2WY-150	2 way valve (for PAW-FC-H150)
PAW-FC-3WY-11/55-1	3 way valve + drain pan (for PAW-FC-D11/15/24/28/40/55-1)
PAW-FC-3WY-65/90-1	3 way valve + drain pan (for PAW-FC-D65/90-1)
PAW-FC-3WY-150	3 way valve (for PAW-FC-H150)

1) Airflow and capacity at 0 Pa of static pressure. 2) Including pan and electrical box. 3) Without water content. * Performances based on: Cooling: Air: 27 °C DB / 19 °C WB, Chilled water: 7 °C / 12 °C - Heating: Air: 20 °C DB, Hot water: 50 °C / 45 °C. ** Fan coil units are produced by Systemair.

1 Innovation for an optimum comfort

2 Low energy consumption fan

3 Efficient high-quality coil

4 Flexible installation: vertical or horizontal

Range of fan coil units

This advanced controller provides a higher level and performance. The fan coil range consists of a compact ducted range ideal for residential and commercial use and one model with high static pressure for commercial applications. All units are certified by Eurovent, include drain pan and filter and are equipped with a low consumption fan motor.
The D type is even more flexible thanks to an L-shaped drain pan. The unit can be installed either in a horizontal or in a vertical position.

Fan coil controller PAW-FC-RC1

This advanced controller provides a higher level of comfort in heating. The sensor can be used as a water flow sensor, stopping the fan when the water temperature is low, avoiding cold drafts in winter.
Also is ready to use J Generation feature of defrost mode and stop the fan coil.

Features:
· Room thermostat
· 3 outputs, 230 V relays for fan control
· 2 outputs, 230 V relays for heating / cooling control
· Modbus RTU slave
· 1 DI for presence detection (key card switch)
· 1 AI for sensor

Panasonic Ventilation Solutions

For maximum savings and easy integration.

AHU connection kit 16 kW, 28 kW and 56 kW

AHU connection kit contains: IP65 box with PCBs and terminal connections mounted inside, expansion valve and sensors.
Heat exchanger, fan & fan motor to be mounted in the AHU itself shall be provided in the field.
Application: Hotels, offices, server rooms or all large buildings where air quality control such as humidity control and fresh air and is needed.

AHU Kit combines air conditioning and fresh air in just one solution.
New AHU Kits connect ECOi systems to air handling unit systems, using the same refrigerant circuit as the VRF system. Large connectivity possibilities mean the Panasonic AHU Kit can be easily integrated.

Air Curtain with DX Coil

Highly efficient heating effect.
The combined air stream, which has a desirable low air current induction factor (mixing factor), can carry the selected initial temperature effect over long distances, and will reach the floor area while still at room temperature. This is necessary to avoid cooling down the interior spaces.

The Panasonic range of air curtains is designed for smooth operation and efficient performance. Air curtains produce a continuous stream of air blown from the top to the bottom of an open doorway and create a barrier that people and products can flow across, but air can't. Designed to improve energy efficiency, minimise heat loss from a building, and to allow retailers to keep doors open to encourage customers, our Air Curtains are suitable for connection to both VRF and PACi Systems.

Heating capacity comparison: Electrical air curtain / Panasonic air curtain

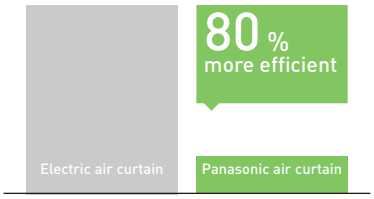

* With the U-100PZH2E5 on the PAW-20 PaIRC-LS. Calculation method: Taking as consideration SCOP of the Panasonic combination of 6,0. If 100 is the energy needed for a air curtain, Panasonic Air curtain will need 1/(1-6)*100=20.

Heat Recovery with DX Coil

Motorised heat recovery by-pass device automatically controlled by unit control to use fresh air free-cooling when convenient.

- Galvanized steel self-supporting panels, internally and externally insulated
- High efficiency enthalpic heat recover, static cross flow type, made by membrane with high moisture permeability, good air tightness, excellent tear resistance, and aging resistance, it is structures with flat plates and corrugated plates. Total heat exchange with temperature efficiency up to 76 % and enthalpy efficiency up to 67 %, also at high level during summer season
- ISO16890 $ePm_{2,5}$ 95 % (F9 EN 779) efficiency class filter with synthetic cleanable media and COARSE 50 % (G3 EN 779) pre-filter ON fresh air, COARSE 50 % filter on return air intake
- Removable side panel to access filters and heat recovery in the event of scheduled maintenance
- Low consumption, high efficiency & low noise direct driven fans with 3-speed EC motors
- Supply section complete with DX Coil (R410A) fitted with solenoid control valve, freon filter, contact temperature sensors on liquid and gas line, NTC sensors upstream and downstream airflow

Energy Recovery Ventilation

Panasonic Energy Recovery Ventilators help you with your comfort and energy-saving plan.
Panasonic Energy Recovery Ventilators can reduce the outside air load because they efficiently recover the heat lost by ventilation during the heat recovery process. This results in energy-saving ventilation and lower running costs for air-conditioning and heating equipment. Furthermore, by designing our current models with an counter-flow heat-exchange element, we achieved products with slim body shapes and quiet operation that create a comfortable and pleasant air-conditioned environment while saving energy.

- Dramatic energy savings achieved through adoption of a high-efficiency counter-flow heat-exchange element
- Counter-flow heat exchange element used for reduced noise and slimmer, more compact body shape
- All maintenance can be performed through a single inspection hole
- Straight air supply / exhaust system used for easier installation

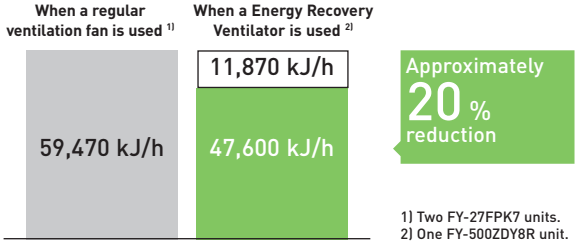

1) Two FY-27FPK7 units.
2) One FY-500ZDY8R unit.

AHU connection kit 16, 28 and 56 kW for ECOi and ECO G

3 types of AHU Kit: Deluxe, Medium and Light.

Model Code	IP 65	0-10V demand control*	Outdoor temperature shift compensation. Cold draft prevention
PAW-160MAH2 / PAW-280MAH2 / PAW-560MAH2	Yes	Yes	Yes
PAW-160MAH2M / PAW-280MAH2M / PAW-560MAH2M	Yes	Yes	No
PAW-160MAH2L / PAW-280MAH2L / PAW-560MAH2L	Yes	No	No

* With CZ-CAPBC2.

Panasonic AHU Kit, 16-56 kW connected to ECOi or ECO G

PCB, Transformer, Solenoid Control Valve, Thermistor x 4 pcs, Terminal Base and Electrical Component Box.

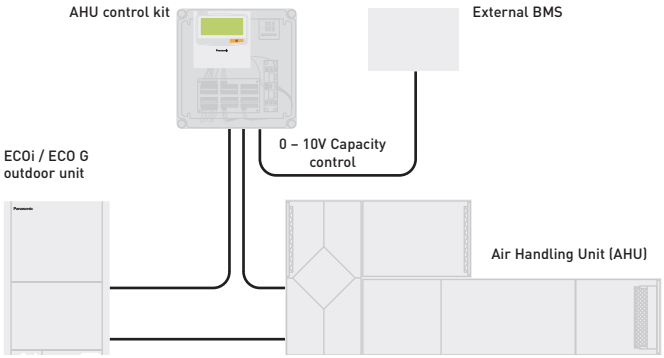

Demand control on the outdoor unit managed by external 0–10V signal.

Main components of mechanical ventilation systems

The main components of a mechanical ventilation system are the following: Air Handling Unit (AHU), air ducts and air distribution elements.

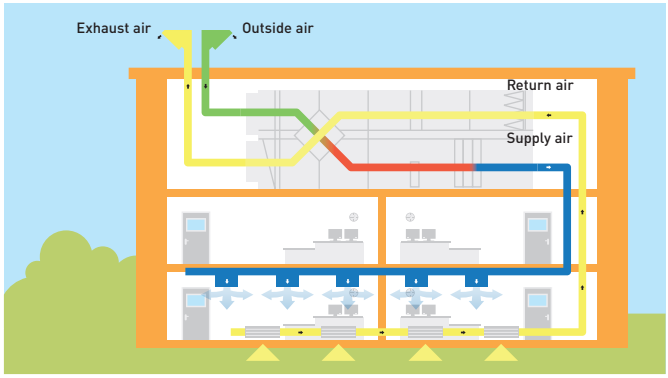

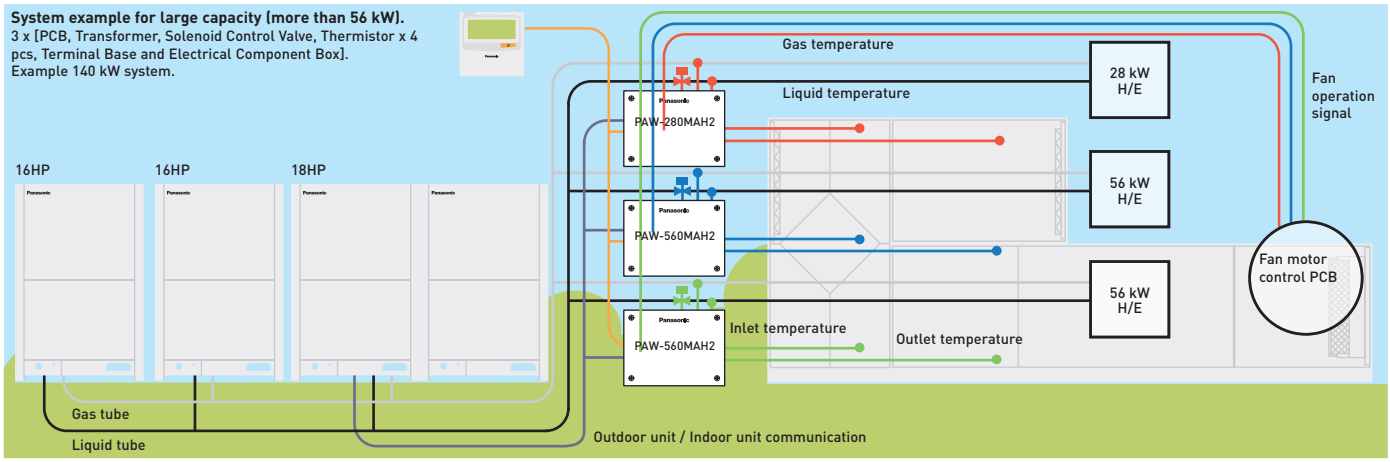

Optional parts: Following functions are available by using different control accessories:

CZ-RTC2 Timer remote controller.
· Operation-ON/OFF
· Mode select
· Temperature setting

* Fan operation signal can be taken from the PCB.

CZ-T10 terminal.
· Input signal= Operation ON/OFF
· Remote controller prohibition
· Output signal= Operating-ON status
· Alarm output (by DC12V)

PAW-OCT, DC12 V outlet. OPTION terminal.
· Output signal= Cooling/Heating/Fan status
· Defrost
· Thermostat-ON

CZ-CAPBC2 Mini seri-para I/O unit.
· Demand control 40 % to 120 % (5 % steps) by 0-10V input signal
· Temperature setting by 0-10V or 0-140 Ω input signal
· Room (inlet air) temp outlet by 4-20 mA
· Mode select or/and ON/OFF control
· Fan operation control
· Operation status output/ Alarm output
· Thermostat ON/OFF control

PAW-T10 PCB to connect to T10 connector.
· A Dry contact PCB has been developed to easily control the unit
· Input signal operation ON/OFF
· Remote control prohibition
· Output signal Operation ON status maximum 230 V 5A (NO/NC)
· Output signal alarm status max. 230 V 5 A (NO/NC)
· Additional available contacts:
  - External humidifier control (ON/OFF) 230 VAC 3A
  - External fan control (ON/OFF) 12V DC
  - External filter status signal potential free
  - External float switch signal potential free
  - External leakage detection sensor or TH. OFF contact potential free (possible usage for external blow out temperature control)

With ECOi outdoor units

ECOi outdoor units shall be used for AHU Connection Kit. 3 models for VRF system: 5 HP (PAW-160MAH2/M/L), 10 HP (PAW-280MAH2/M/L) and 20 HP (PAW-560MAH2/M/L).

With ECO G outdoor units

- One AHU kit may be used for one ECO G unit. Multiple AHU kits cannot be used
- Mixed with standard indoor units is not allowed
- Power specifications are Single Phase 220V to 240 V

Technical focus

- Maximum capacity/system: 60 HP (168 kW)
- Maximum piping length: 100 m (120 m equivalent)
- Elevation difference (indoor unit / indoor unit): 4 m
- In/Out capacity ratio: 50~100 %
- Maximum indoor unit number: 3 units*
- Outdoor temperature range in heating: -20 ~ +15 °C
- Available temperature range for the suction air at AHU Kit:
  cool: +18 ~ +32 °C / heat: +16 ~ +30 °C

* To be simultaneous operation controlled by one remote controller sensor.

- The systems is controlled by the suction air (or room return air) temperature (same as standard indoor unit). (Selectable mode: Automatic / Cooling / Heating / Fan / Dry (but same as Cool)
- The discharge air temperature is also controlled to prevent too-low air discharge in cooling or too-high air discharge in heating (in case of VRF)
- Demand control (Forcible thermostat-OFF control by operating current)
- Defrost operation signal, Thermo-ON/OFF states output
- Drain pump control (Drain-pump and the float switch to be supplied in local)
- External target temperature setting via Indoor/Outdoor signal interface is available with CZ-CAPBC2 (Ex. 0 – 10V)
- Demand control 40 % to 120 % (5 % steps) by 0-10V input signal
- Connectable with P-Link system. Special care for electrical noise may be necessary depending on the on-side system
- Fan control signal from the PCB can be used for control the air volume (high/mid/low and LL for Th-OFF). Need to change the fan control circuit wiring at field

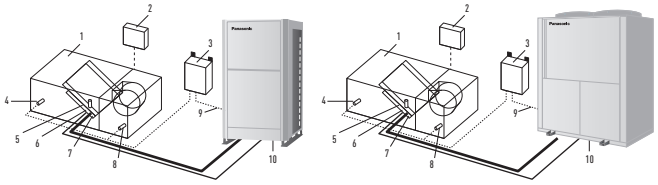

System & regulations. System overview.
1. AHU Unit equipment (field supplied)
2. AHU Unit system controller field supplied)
3. AHU Kit controller box (with control PCB)
4. Thermistor for discharge air
5. Electronic expansion valve
6. Thermistor for gas pipe (E3)
7. Thermistor for liquid pipe (E1)
8. Thermistor for suction air
9. Inter-unit wiring
10. Outdoor unit

HP			5 HP	10 HP	20 HP	30 HP	40 HP	50 HP	60 HP
			PAW-160MAH2/M/L	PAW-280MAH2/M/L	PAW-560MAH2/M/L	PAW-280MAH2/M/L PAW-560MAH2/M/L	PAW-560MAH2/M/L PAW-560MAH2/M/L	PAW-560MAH2/M/L PAW-560MAH2/M/L PAW-280MAH2/M/L	PAW-560MAH2/M/L PAW-560MAH2/M/L PAW-560MAH2/M/L
Nominal cooling capacity @ 50Hz		kW	14,00	28,0	56,0	84,0	112,0	140,0	168,0
Nominal heating @ 50Hz		kW	16,00	31,5	63,0	95,0	127,0	155,0	189,0
Cooling airflow	Hi / Lo	m³/min	2600/1140	5000/3500	10000/7000	15000/10500	20000/14000	25000/17500	30000/21000
Bypass factor			0,9 (recommended)	0,9 (recommended)	0,9 (recommended)	0,9 (recommended)	0,9 (recommended)	0,9 (recommended)	0,9 (recommended)
Dimensions	H x W x D	mm	303 x 232 x 110	404 x 425 x 78	404 x 425 x 78	404 x 425 x 78	404 x 425 x 78	404 x 425 x 78	404 x 425 x 78
Weight		kg	3,2	6,3	6,3	6,3	6,3	6,3	6,3
Piping length	Min / Max	m	10/100	10/100	10/100	10/100	10/100	10/100	10/100
Elevation difference (in/out)	Max	m	10	10	10	10	10	10	10
Piping connections	Liquid pipe	Inch (mm)	3/8 (9,52)	3/8 (9,52)	5/8 (15,88)	3/4 (19,05)	3/4 (19,05)	3/4 (19,05)	3/4 (19,05)
	Gas pipe	Inch (mm)	5/8 (15,88)	7/8 (22,22)	1 1/8 (28,58)	1 1/4 (31,75)	1 1/2 (38,15)	1 1/2 (38,15)	1 1/2 (38,15)
Intake temperature of AHU Kit	Cool Min ~ Max	°C DB	+18 ~ +32	+18 ~ +32	+18 ~ +32	+18 ~ +32	+18 ~ +32	+18 ~ +32	+18 ~ +32
	Cool Min ~ Max	°C WB	+13 ~ +23	+13 ~ +23	+13 ~ +23	+13 ~ +23	+13 ~ +23	+13 ~ +23	+13 ~ +23
	Heat Min ~ Max	°C	+16 ~ +30	+16 ~ +30	+16 ~ +30	+16 ~ +30	+16 ~ +30	+16 ~ +30	+16 ~ +30
Ambient temperature of outdoor unit	Cool Min ~ Max	°C	-10 ~ +43	-10 ~ +43	-10 ~ +43	-10 ~ +43	-10 ~ +43	-10 ~ +43	-10 ~ +43
	Heat Min ~ Max	°C	-20 ~ +15	-20 ~ +15	-20 ~ +15	-20 ~ +15	-20 ~ +15	-20 ~ +15	-20 ~ +15

AHU connection kit / System combination

Capacity			Outdoor unit combination		AHU kit combination		
5 HP	16 kW		All ECOi outdoor units		PAW-160MAH2(M/L)	—	—
10 HP	28 kW	U-10ME2E8	—	—	PAW-280MAH2(M/L)	—	—
20 HP	56 kW	U-20ME2E8	—	—	PAW-560MAH2(M/L)	—	—
30 HP	84 kW	U-16ME2E8	U-14ME2E8	—	PAW-560MAH2(M/L)	PAW-280MAH2(M/L)	—
40 HP	112 kW	U-20ME2E8	U-20ME2E8	—	PAW-560MAH2(M/L)	PAW-560MAH2(M/L)	—
50 HP	140 kW	U-18ME2E8	U-16ME2E8	U-16ME2E8	PAW-560MAH2(M/L)	PAW-560MAH2(M/L)	PAW-280MAH2(M/L)
60 HP	168 kW	U-20ME2E8	U-20ME2E8	U-20ME2E8	PAW-560MAH2(M/L)	PAW-560MAH2(M/L)	PAW-560MAH2(M/L)

5 HP	16 kW		All ECO G outdoor units			PAW-160MAH2(M/L)	
10 HP	28 kW		All ECO G outdoor units			PAW-280MAH2(M/L)	
20 HP	56 kW		U-20GE3E5			PAW-560MAH2(M/L)	

Rating Conditions: Cooling Indoor 27 °C DB / 19 °C WB. Cooling Outdoor 35 °C DB / 24 °C WB. Heating Indoor 20 °C DB. Heating Outdoor 7 °C DB / 6 °C WB. (DB: Dry Bulb; WB: Wet Bulb).
Specifications subject to change without notice. For detailed information about ErP / Energy Labelling, please visit our websites www.aircon.panasonic.eu or www.ptc.panasonic.eu.

Air Curtain with DX Coil, connected to the VRF or PACi Systems

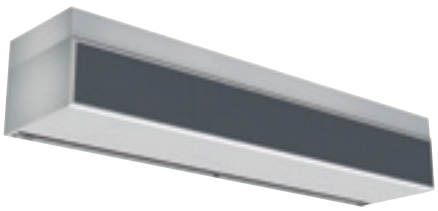

Highly efficient heating effect

The combined air stream, which has a desirable low air current induction factor (mixing factor), can carry the selected initial temperature effect over long distances, and will reach the floor area while still at room temperature. This is necessary to avoid cooling down the interior spaces.
Available in different lengths to suit requirements between 1 and 2,5 m, both air curtains have outlet grilles that can be adjusted to five different positions. The HS model can be installed up to a height of 3,0 m with the LS model up to 2,7 m. The outlet grilles can be easily adjusted into five positions to suit different installation requirements and the air filter can be accessed without the need for specialist tools.

- High performance with EC fan motor (40 % lower running costs compared to a standard AC fan motor)
- Easy Cleaning and Servicing
- Can be connected to either Panasonic VRF or PACi systems
- Built-in drain for cooling operation
- HS and LS models can be controlled via Panasonic's range of remote internet controls

The new HS and LS models are ideal for connection to a ECOi or PACi system. With simple "plug and play" installation, both are fitted with an EC fan motor for a smooth operation and efficient performance. This fan guarantees 40 % lower running cost than with a standard AC fan motor. Air curtains run approximately 12 hours per day at shops, and efficient performance contributes to energy savings.

Internet control

An App added to your tablet or smartphone or via the Internet allows you to control and manage the system remotely. There is also the option to integrate into existing BMS systems by using other Panasonic interfaces.

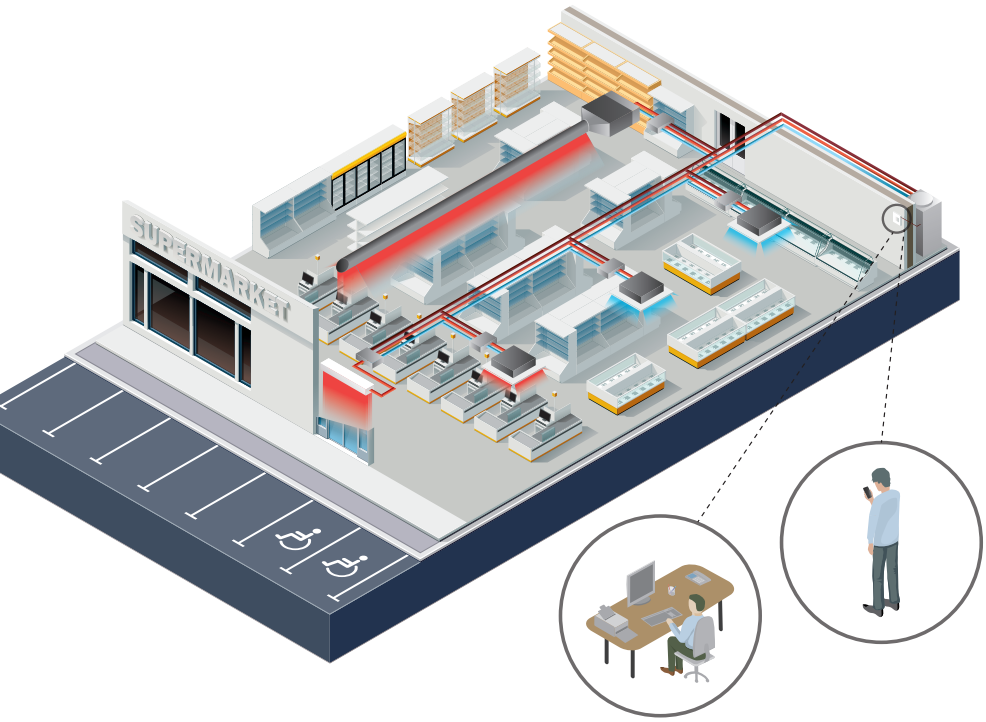

Intelligent Operation

Our air curtains combine airflow and heating / cooling technology to ensure optimum comfort and energy efficiency whilst also creating an effective barrier between indoor and outdoor environments. Design and installation is key to achieving the correct height / temperature settings to achieve optimum performance. Our air curtains are designed to answer the demands of the retail, commercial and industrial markets.

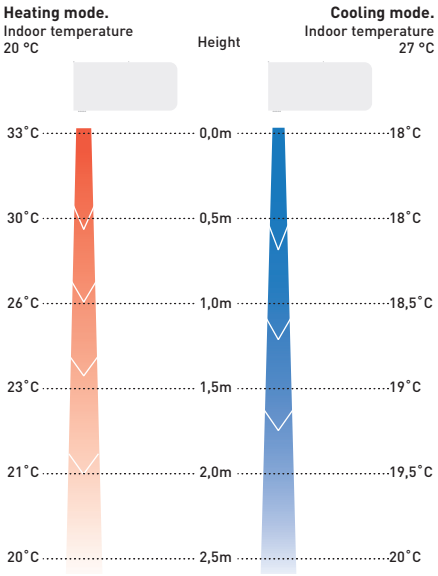

How does it work?

Stale air from the room is taken in and ejected near the door. This creates a 'roll of air' that shields the door area, mixing with the colder incoming air. It then turns away from the door, back into the room and toward the intake screen, where it is partly drawn in again. This flow of air helps to create a barrier for heat loss yet at the same time refreshes room air

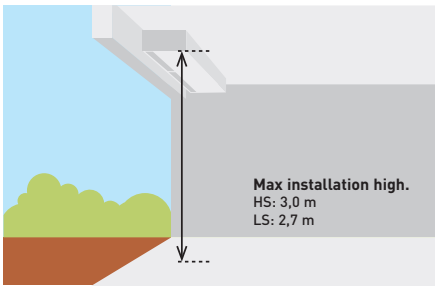

High efficiency air curtain connected to your PACi or VRF installation. EC Fan motor for a smooth operation and an efficient performance. 2 types of air flow available: LS and HS! Easy installation, regulation, cleaning, service.

Technical focus

- Save up to 40 % energy costs by use of the integrated EC fan technology (higher efficiency than conventional AC fan, soft start and longer motor duration)
- 4 length of air curtain LS and HS are available 1,0, 1,5, 2,0 and 2,5 m
- Installation height up to 3,0 m
- Outlet grilles can be adjusted in five positions, to suite different indoor and installation requirements
- Control with Panasonic remote control systems (optional)
- Direct integration to BMS by optional Panasonic interfaces
- Trip dray included in all DX air curtain steps

Features

Comfort: Easy redirection of air flow by means of manual deflector.

Ease of use: Speed selector (high and low) on the unit itself.

Easy installation and maintenance: Easy installation. Compact dimensions improve installation and positioning. Easy cleaning of grid without opening of the unit.

Optimised airflow velocity

1. Energy losses, no air curtain installed
2. Too low velocity air curtain – air curtain not efficient
3. Optimum results with the Frico air curtain connected to Panasonic VRF
4. Too high velocity air curtain – considerable turbulence, energy lost to the outside, air curtain not efficient

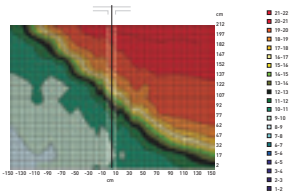

Opening without air curtain.
In an unprotected opening the cold air flows out and the cold storage room becomes much too warm.

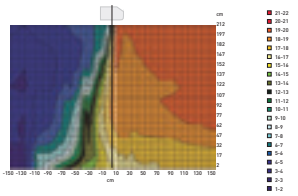

Opening with air curtain, wrong angle.
If the angle is too small the hot air is blown into the cold storage room.

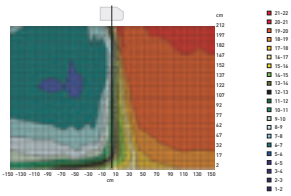

Opening with air curtain, too high speed.
Excessive speed creates turbulence, which causes energy loss and increases the cold storage temperature.

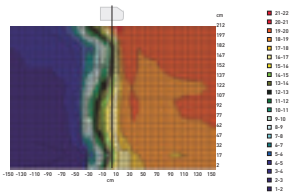

Opening with correctly adjusted air curtain.
With a correctly set air curtain unit there is a sharp separation between the different temperature zones.

Outdoor unit			4 HP	4 HP	5 HP	8 HP
Air outlet height 2,7 m			**PAW-10EAIRC-LS**	**PAW-15EAIRC-LS**	**PAW-20EAIRC-LS**	**PAW-25EAIRC-LS**
Air volume	High	m³/h	1800	2700	3600	4500
Cooling capacity [1]	Max	kW	6,1	9,7	13,0	17,0
Heating capacity [2]	Max	kW	7,9	12,0	15,0	19,0
Heat Exchanger	Volume	L	1,67	2,85	3,94	5,03
Piping connections	Liquid pipe / Gas pipe	Inch (mm)	3/8 (9,52) / 5/8 (15,88)	3/8 (9,52) / 3/4 (19,05)	3/8 (9,52) / 7/8 (22,22)	3/8 (9,52) / 7/8 (22,22)
Electric consumption fan	230 V / 50Hz	kW	0,30	0,50	0,60	0,80
Fan type			EC	EC	EC	EC
Current	230 V / 50Hz	A	2,10	3,10	4,10	5,10
Sound pressure [3]	Max	dB(A)	65	66	67	69
Dimension [4] / Weight	H x W x D	mm / kg	260 (+140) x 1000 x 460 / 50	260 (+140) x 1500 x 460 / 65	260 (+140) x 2000 x 460 / 80	260 (+140) x 2500 x 460 / 95
Door width		m	1,0	1,5	2,0	2,5
Refrigerant			R410A	R410A	R410A	R410A

Outdoor unit			4 HP	6 HP	8 HP	10 HP
Air outlet height 3,0 m			**PAW-10EAIRC-HS**	**PAW-15EAIRC-HS**	**PAW-20EAIRC-HS**	**PAW-25EAIRC-HS**
Air volume	High	m³/h	2700	3600	5400	6300
Cooling capacity [1]	Max	kW	9,1	13,0	19,5	23,7
Heating capacity [2]	Max	kW	11,8	15,8	23,6	27,6
Heat Exchanger	Volume	L	1,67	2,85	3,94	5,12
Piping connections	Liquid pipe / Gas pipe	Inch (mm)	3/8 (9,52) / 5/8 (15,88)	3/8 (9,52) / 3/4 (19,05)	3/8 (9,52) / 7/8 (22,22)	3/8 (9,52) / 7/8 (22,22)
Electric consumption fan	230 V / 50Hz	kW	0,75	1,00	1,50	1,75
Fan type			EC	EC	EC	EC
Current	230 V / 50Hz	A	4,10	5,50	8,20	9,60
Sound pressure [3]	Max	dB(A)	66	67	68	68
Dimension [4] / Weight	H x W x D	mm / kg	260 (+140) x 1000 x 460 / 55	260 (+140) x 1500 x 460 / 65	260 (+140) x 2000 x 460 / 85	260 (+140) x 2500 x 460 / 110
Door width		m	1,0	1,5	2,0	2,5
Refrigerant			R410A	R410A	R410A	R410A

Accessories	
PAW-AIR1-DP	Optional drain pump. Available in July 2019

1) Cooling capacity DX Coil, air temperature in/out +27/+18 °C, R32 and R410. 2) Heating capacity condenser, air temperature in/out +20/+33 °C, R32 and R410. In the case of lower outdoor temperatures, an outdoor model with higher capacity may be necessary. 3) Measured in distance up to 5,0 m, direction factor 2, absorbing surfaces 200 m², Min / Max air volume. 4) 140 mm is the height of an electrical box if it is installed on the top.

Rating Conditions: Cooling Indoor 27 °C DB / 19 °C WB. Cooling Outdoor 35 °C DB / 24 °C WB. Heating Indoor 20 °C DB. Heating Outdoor 7 °C DB / 6 °C WB. (DB: Dry Bulb; WB: Wet Bulb).
Specifications subject to change without notice. For detailed information about ErP / Energy Labelling, please visit our websites www.aircon.panasonic.eu or www.ptc.panasonic.eu.

Energy Recovery Ventilation

Energy efficiency and ecology

Energy consumption is dramatically reduced by using a counter-flow heat-exchange element. Air conditioning load is reduced by approximately 20 %, resulting in significant energy savings.

Comparison of former and current elements

With the cross-flow element, air moves in a straight line across the element; with the counter-flow element, air flows through the element for a longer time (longer distance), so the heat-exchange effect remains unchanged even if the element is made thinner.

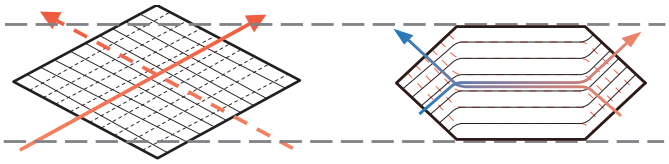

Former (cross-flow element)

New (counter-flow element)

Heat exchange ventilation and normal ventilation

Energy-saving ventilation can be achieved through the proper use of heat-exchange ventilation and normal ventilation.

Heat exchange ventilation.
When a room is cooled or heated, the exhausted cooling / heating energy is recovered by heat-exchange ventilation.

Normal ventilation.
This is used in the spring and autumn, when rooms are not cooled or heated, that is, when there is little difference between the indoor and outdoor air conditions. In addition, at night during the hot season, when the outside air temperature drops the outside air is drawn inside without heat exchange, alleviating the load on the air conditioning equipment.
The heat exchanger is made up of a membrane manufactured from a special material covered in resin for optimal heat transmission. The nylon/polyester fibre filter offers high dust retention capacity. We have also redesigned the air ducts to obtain a long-lasting heat exchange system which does not need periodic cleaning.

Heat exchanger

With the cross-flow element, air moves in a straight line across the element. With the counter-flow element, airflows through the element for a longer time (longer distance), so the heat-exchange effect remains unchanged even if the element is made thinner.

More comfort

Quiet operation
Low noise operation results in noticeably quieter units. All models with capacities below 500 m³/h run at noise levels below 32dB (High setting) and even our largest 1.000 m³/h-capacity model runs at only 37,5dB (High setting).

Long service life of heat-exchange element

We used a nonwoven cloth filter with a high dust collection efficiency and redesigned the air flow passages to achieve a durable heat-exchange element that requires no periodic cleaning.

Changes in airflow resistance based on number of years in service.

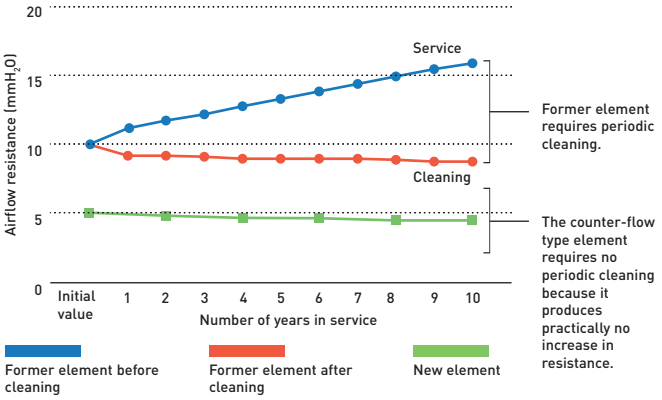

Easy installation and maintenance

Slim shape and easier installation.
Counter-flow heat exchange element used for reduced noise and slimmer, more compact body shape.
270 mm Height: FY-250ZDY8R // FY-350ZDY8R // FY-500ZDY8R
388 mm Height: FY-800ZDY8R // FY-01KZDY8R

Reverse mountable direct air supply / exhaust system.
Adoption of straight air supply / exhaust system: Duct design is simplified because the air supply / exhaust ducts are straight.
Since each unit can be mounted in reverse position, only one inspection hole is needed for two units: Two units can share one inspection hole so duct work is easier and more flexible.

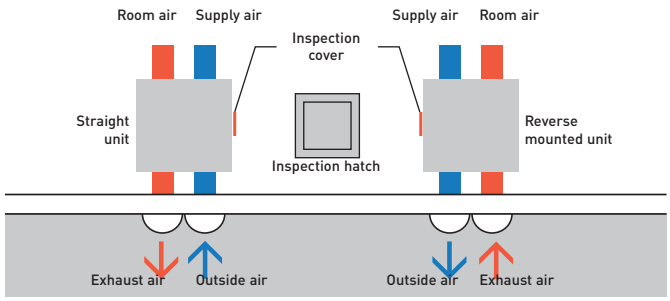

Suppresses indoor temperature changes while providing fresh air. Recovers up to 77 % of the heat in the outgoing air, for an ecological and energy efficient building.

Features

Energy efficiency and ecology.
- Up to 20 % energy saving in the installation
- Recovers up to 77 % of the heat in the outgoing air

Comfort.
- Cleaning reduced due to the revolutionary structure (every 6 months)
- Ideal for indoor spaces without windows

Easy installation and maintenance.
- 5 models for easier selection
- Reduced system height (270 mm and 388 mm)
- Side opening for cleaning (inspection of filter, motor and other parts)
- Installation can be reversed to share an inspection opening between 2 machines
- Easy connection to the air conditioning unit (without additional elements)
- Installation in false ceilings
- Units operate at 220 - 240 V
- High static pressure for easier installation
- High energy saving, up to 20 %
- Counter Cross Flow technology for better efficiency
- Long life element core
- Easy installation and 20 % less thickness
- Easy connection to air conditioning units
- Silent units

Balanced ventilation

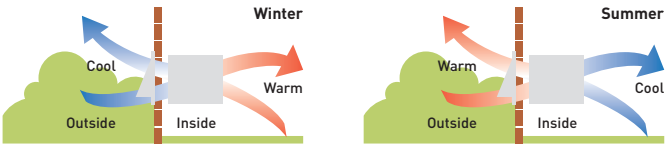

A new intuitive & stylish control

- Included as a standard control
- Compact and flat panel
- Filter cleaning support
  - Signal alert for clearing
  - Filer usage condition by 1/2/3/4 months
- Size (W x H x D) 116 x 120 x 40 mm

Technical focus

Included wired remote controller.

Rated flow rate			250 m³/h			350 m³/h			500 m³/h			800 m³/h			1000 m³/h		
Models			FY-250ZDY8R			FY-350ZDY8R			FY-500ZDY8R			FY-800ZDY8R			FY-01KZDY8R		
			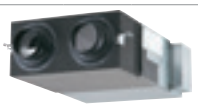														
			E-High	**High**	**Low**	**E-High**	**High**	**Low**	**E-High**	**High**	**Low**	**E-High**	**High**	**Low**	**E-High**	**High**	**Low**
Power source			220V / 240 V / 50Hz			220V / 240 V / 50Hz			220V / 240 V / 50Hz			220V / 240 V / 50Hz			220V / 240 V / 50Hz		
Heat exchange ventilation			**E-High**	**High**	**Low**	**E-High**	**High**	**Low**	**E-High**	**High**	**Low**	**E-High**	**High**	**Low**	**E-High**	**High**	**Low**
Input power		W	112,00/ 128,00	108,00/ 123,00	87,00/ 96,00	182,00/ 190,00	178,00/ 185,00	175,00/ 168,00	263,00/ 289,00	204,00/ 225,00	165,00/ 185,00	387,00/ 418,00	360,00/ 378,00	293,00/ 295,00	437,00/ 464,00	416,00/ 432,00	301,00/ 311,00
Air volume		m³/h	250	250	190	350	350	240	500	500	440	800	800	630	1000	1000	700
External static pressure		Pa	105	95	45	140	60	45	120	60	35	140	110	55	105	80	75
Sound power		dB	30,00/ 31,50	29,50/ 30,50	23,50/ 26,50	32,50/ 33,00	30,50/ 31,00	22,50/ 25,50	36,50/ 37,50	34,50/ 35,50	31,00/ 32,50	37,00/ 37,50	36,50/ 37,00	33,50/ 34,50	37,50/ 38,50	37,00/ 37,50	33,50/ 34,50
Temperature exchange efficiency		%	75	75	77	75	75	78	75	75	76	75	75	76	75	75	79
Normal ventilation			**E-High**	**High**	**Low**	**E-High**	**High**	**Low**	**E-High**	**High**	**Low**	**E-High**	**High**	**Low**	**E-High**	**High**	**Low**
Input power		W	112,00/ 128,00	108,00/ 123,00	87,00/ 96,00	182,00/ 190,00	178,00/ 185,00	175,00/ 168,00	263,00/ 289,00	204,00/ 225,00	165,00/ 185,00	387,00/ 418,00	360,00/ 378,00	293,00/ 295,00	437,00/ 464,00	416,00/ 432,00	301,00/ 311,00
Air volume		m³/h	250	250	190	350	350	240	500	500	440	800	800	630	1000	1000	700
External static pressure		Pa	105	95	45	140	60	45	120	60	35	140	110	55	105	80	75
Sound power		dB	30,00/ 31,50	29,50/ 30,50	23,50/ 26,50	32,50/ 33,00	30,50/ 31,00	22,50/ 25,50	37,50/ 38,50	37,00/ 38,00	31,00/ 32,50	37,00/ 37,50	36,50/ 37,00	33,50/ 34,50	39,50/ 40,50	39,00/ 39,50	35,50/ 36,50
Temperature exchange efficiency		%	—	—	—	—	—	—	—	—	—	—	—	—	—	—	—
Dimension	H x W x D	mm	270 x 882 x 599			317 x 1050 x 804			317 x 1090 x 904			388 x 1322 x 884			388 x 1322 x 1134		
Net weight		kg	29			49			57			71			83		

This noise of the product is the value which was measured at the acoustic room. Actually, in the established condition, that undergo influence by the echoing of the room and so that become bigger than the display numerical value. The input, the current and the exchange efficiency are values at the time of the mentioned air volume. The noise level shall be measured 1,5 m below the centre of the unit. The temperature exchange efficiency averages that of when cooling and when heating.

Rating Conditions: Cooling Indoor 27 °C DB / 19 °C WB. Cooling Outdoor 35 °C DB / 24 °C WB. Heating Indoor 20 °C DB. Heating Outdoor 7 °C DB / 6 °C WB. (DB: Dry Bulb; WB: Wet Bulb).
Specifications subject to change without notice. For detailed information about ErP / Energy Labelling, please visit our websites www.aircon.panasonic.eu or www.ptc.panasonic.eu.

Heat Recovery with DX Coil

Panasonic launches an heat recovery solution for greater energy efficiency.

Panasonic's heat recovery solution performs well in extreme weather conditions and can achieve up to 77 % efficiency (63 % in enthalpy efficiency).

The counter-flow heat exchanger reduces the air conditioning load, enabling customers – typically owners of hotels, restaurants and other large commercial buildings – to reduce their energy consumption and save on the cost of maintaining comfortable room temperatures.

Energy efficiency

As the latest example of Panasonic's continued commitment to developing unbeatable, energy-efficient air conditioning technologies for commercial applications, the company has introduced a heat recovery device.
The unit features a DX Coil designed to recover up to 77 % of the heat from outgoing air, and a air purifying system which helps to improve air quality.
In even the most demanding commercial applications, business owners will benefit from the unit's ability to by-pass the heat exchange process when the outside air temperature is cool enough for fresh air to be drawn directly inside (free cooling).
This alleviates the load on the air conditioning equipment and consequently reduces energy bills.

Supply section complete

The supply section comes complete with the DX Coil (using R410A refrigerant) – fitted with a solenoid control valve, freon filter, contact temperature sensors on the liquid and gas line, and NTC sensors on the upstream and downstream airflows. The built-in electric box is equipped with a PCB to control the internal fan speed and to interconnect the outdoor and indoor units, and the ducts are connected by circular plastic collars.

Characteristic curves

The following curves show the unit external static pressure at maximum fan speed for each model.

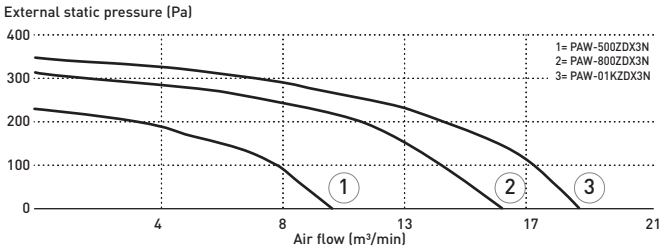

Balanced Ventilation

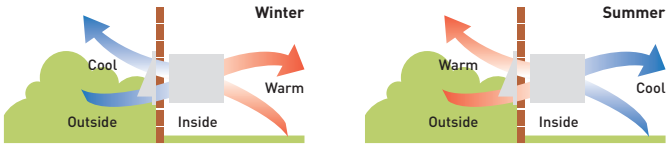

Interconnection

This ventilation unit is connected to an ECOi indoor unit (3,0 kW, 4,0 kW or 4,5 kW) and can be controlled by the easy-to-use ECOi remote controller CZ-RTC5B.
This capability makes the system an excellent choice for hotels, offices (large and small), educational settings and other buildings requiring different temperatures in multiple rooms. The system also integrates easily with building management systems.

Technical focus

- Motorised heat recovery by-pass device automatically controlled by unit control to use fresh air free-cooling when convenient

General characteristics

- Galvanized steel self-supporting panels, internally and externally insulated
- High efficiency enthalpic heat recover, static cross flow type, made by membrane with high moisture permeability, good air tightness, excellent tear resistance, and aging resistance, it is structures with flat plates and corrugated plates. Total heat exchange with temperature efficiency up to 76 % and enthalpy efficiency up to 67 %, also at high level during summer season
- ISO16890 $ePm_{2,5}$ 95 % (F9 EN 779) efficiency class filter with synthetic cleanable media and COARSE 50 % (G3 EN 779) pre-filter ON fresh air, COARSE 50 % filter on return air intake
- Removable side panel to access filters and heat recovery in the event of scheduled maintenance
- Low consumption, high efficiency & low noise direct driven fans
- Supply section complete with DX Coil (R410A) fitted with solenoid control valve, freon filter, contact temperature sensors on liquid and gas line, NTC sensors upstream and downstream airflow
- Built-in electric box equipped with PCB to control internal fan speed and to interconnect outdoor/indoor units
- Duct connection by circular plastic collars
- CZ-RTC5B Timer remote controller (option)

Interconnection to outdoor/indoor units

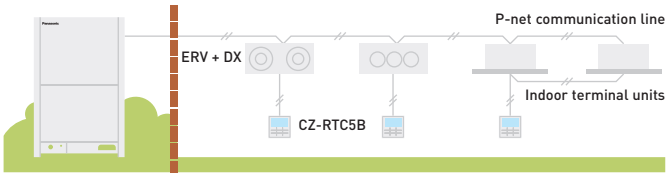

PAW-RE2C4
Optional Controller.
Control for hotel application.

CZ-RTC5B
Optional Controller.
Wired remote controller.
Compatible with Econavi.

Model			PAW-500ZDX3N		PAW-800ZDX3N		PAW-01KZDX3N	
Power source	Voltage	V	230		230		230	
	Phase		Single Phase		Single Phase		Single Phase	
	Frequency	Hz	50		50		50	
Air volume		m^3/min	8,33		13,33		16,67	
External static pressure [1]		Pa	90		120		115	
Maximum current	Total full load	A	0,6		1,4		2,1	
Input power		W	150		320		390	
Sound pressure [2]		dB(A)	39		42		43	
Piping connections	Liquid pipe	Inch (mm)	1/4 (6,35)		1/4 (6,35)		1/4 (6,35)	
	Gas pipe	Inch (mm)	1/2 (12,70)		1/2 (12,70)		1/2 (12,70)	
Heat recovery			**Cooling**	**Heating**	**Cooling**	**Heating**	**Cooling**	**Heating**
Temperature efficiency		%	76	76	76	76	76	76
Enthalpy efficiency		%	63	67	63	65	60	62
Saved power summer mode or winter mode*		kW	1,70	4,30 (4,80)	2,50	6,50 (7,30)	3,20	8,20 (9,00)
DX Coil								
Total / Sensible capacity		kW	3,00 / 2,10	2,50 / 2,70	5,10 / 3,50	4,40 / 4,80	5,80 / 4,10	5,20 / 6,70
Off temperature		°C	15,9	28,0 (27,3)	15,5	29,6 (29,0)	16,2	28,5 (27,8)
Off relative humidity		%	90	16 (15)	90	14 (13)	89	15 (14)

Nominal summer conditions: Outside air: 32 °C DB, RH 50 %. Ambient air: 26 °C DB, RH 50 %. Nominal winter conditions: Outside air: -5 °C DB, RH 80 %. Ambient air: 20 °C DB, RH 50 %. Cooling mode air inlet condition: 28,5 °C DB, RH 50 %; evaporating temperature 7 °C. Heating mode air inlet condition: 13 °C DB, RH 40 % (11 °C DB, RH 45 %); condensating temperature 40 °C. DB: Dry Bulb; RH: Relative Humidity.
1) Referred to the nominal air flow after filter and plate heat exchanger. 2) Sound pressure level calculated at 1 m far from: ducted supply exhaust air ducted return - first air intake / service side, at normal condition. * Tentative data.

SELF-DIAGNOSING | AUTOMATIC FAN | HUMIDITY CONTROL DRY | AUTOMATIC RESTART | BUILT-IN DRAIN PUMP | OPTIONAL WLAN | BMS CONNECTIVITY

INTERNET CONTROL: Optional.

Rating Conditions: Cooling Indoor 27 °C DB / 19 °C WB. Cooling Outdoor 35 °C DB / 24 °C WB. Heating Indoor 20 °C DB. Heating Outdoor 7 °C DB / 6 °C WB. (DB: Dry Bulb; WB: Wet Bulb).
Specifications subject to change without notice. For detailed information about ErP / Energy Labelling, please visit our websites www.aircon.panasonic.eu or www.ptc.panasonic.eu.

Dimensions and tube sizes of branches and headers for ECOi 2-Pipe Systems

Optional distribution joint kits

See the installation instructions packaged with the distribution joint kit for the installation procedure.

Model name	Cooling capacity after distribution	Remarks
1. CZ-P680PH2BM	68,0 kW or less	For outdoor unit
2. CZ-P1350PH2BM	From 68,0 kW to 168,0 kW	For outdoor unit
3. CZ-P224BK2BM	22,4 kW or less	For indoor unit
4. CZ-P680BK2BM	From 22,4 kW to 68,0 kW	For indoor unit
5. CZ-P1350BK2BM	From 68,0 kW to 168,0 kW	For indoor unit

Tubing size (with thermal insulation)

1. CZ-P680PH2BM: For outdoor unit side (Capacity after distribution joint is 68,0 kW or less).

Gas tubing

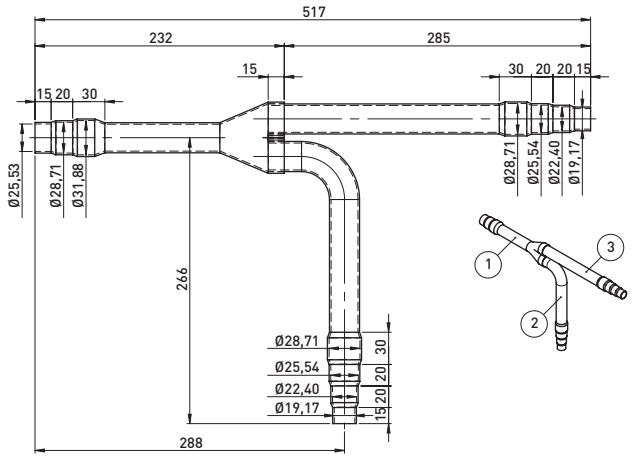

Liquid tubing

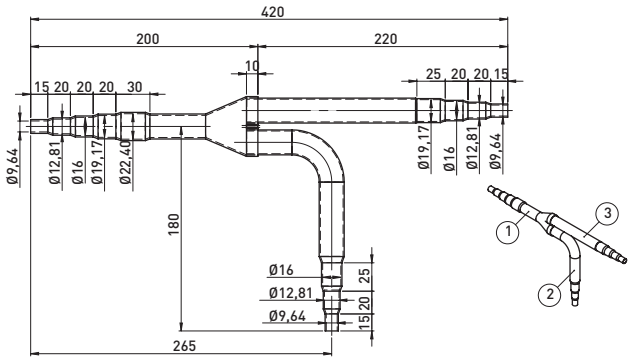

Unit: mm

2. CZ-P1350PH2BM: For outdoor unit side (Capacity after distribution joint is greater than 68,0 kW and no more than 168,0 kW).

Gas tubing

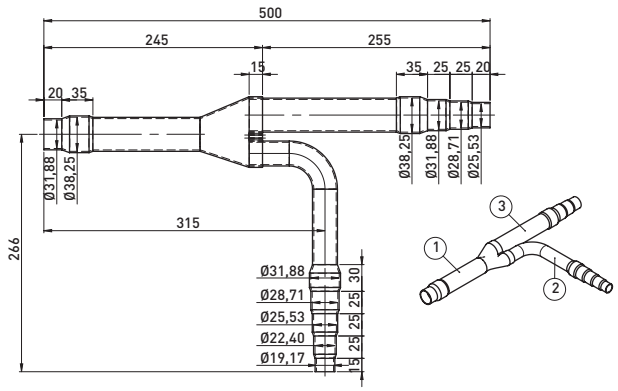

Liquid tubing

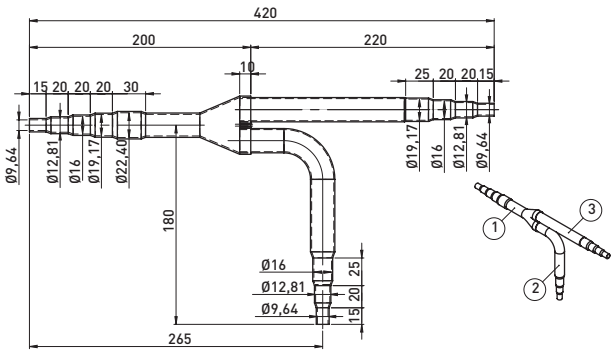

Unit: mm

3. CZ-P224BK2BM: For indoor unit side (Capacity after distribution joint is 22,4 kW or less).

Gas tubing

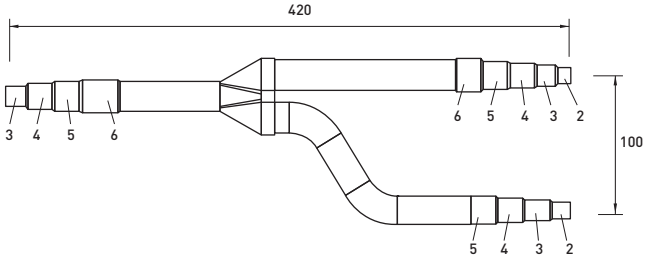

Liquid tubing

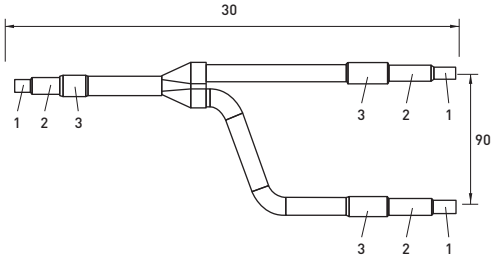

Unit: mm

4. CZ-P680BK2BM: For indoor unit side (Capacity after distribution joint is greater than 22,4 kW and no more than 68,0 kW).

Gas tubing

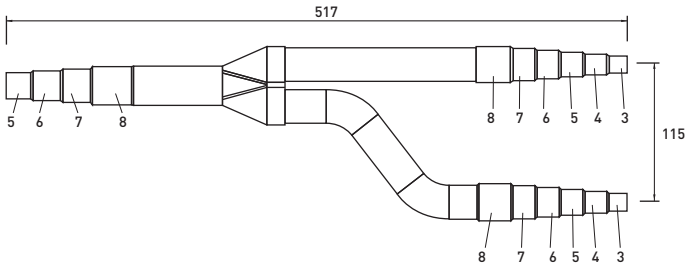

Liquid tubing

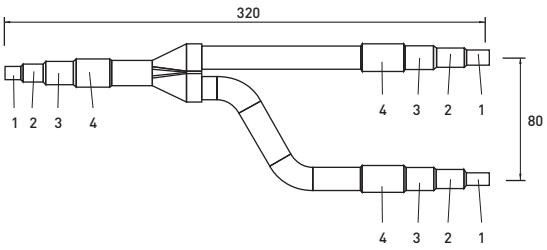

Unit: mm

5. CZ-P1350BK2BM: For indoor unit side (Capacity after distribution joint is greater than 68,0 kW and no more than 168,0 kW).

Gas tubing

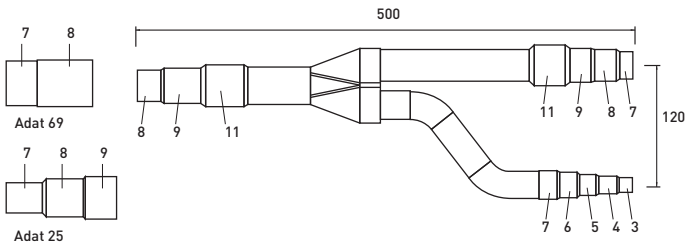

Liquid tubing

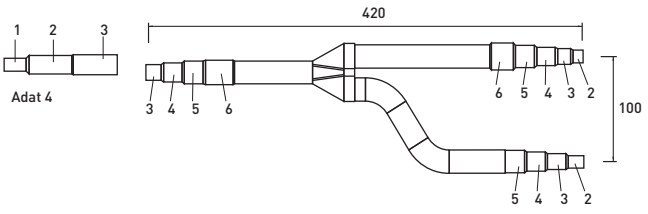

Unit: mm

Diameters		Diameters		Diameters	
1	6,35 mm 1/4"	6	22,40 mm 7/8"	11	38,10 mm 1"1/2
2	9,52 mm 3/8"	7	25,40 mm 1"	12	41,28 mm 1"5/8
3	12,70 mm 1/2"	8	28,57 mm 1" 1/8	13	44,45 mm 1"3/4
4	15,88 mm 5/8"	9	31,75 mm 1" 1/4	14	50,80 mm 2"
5	19,05 mm 3/4"	10	34,92 mm 1"3/8		

Header pipe set for ECOi 2-Pipe system

CZ-P4 HP4C2BM: Header pipe models for 2-Pipe systems.

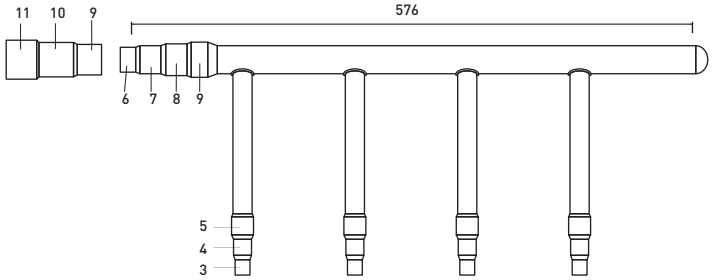

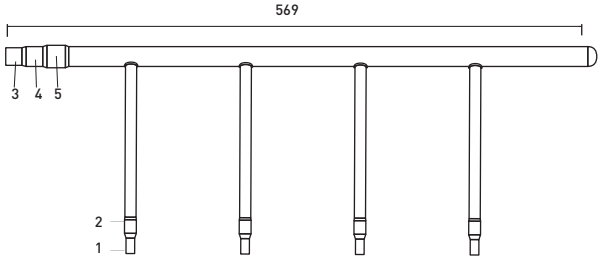

Diameters		Diameters		Diameters	
1	6,35 mm 1/4"	5	19,05 mm 3/4"	9	31,75 mm 1" 1/4
2	9,52 mm 3/8"	6	22,40 mm 7/8"	10	34,92 mm 1"3/8
3	12,70 mm 1/2"	7	25,40 mm 1"	11	38,10 mm 1"1/2
4	15,88 mm 5/8"	8	28,57 mm 1" 1/8		

Branches and headers for 3-Pipe ECOi and Mini ECOi

Optional distribution joint kits for 3-Pipe ECOi EX MF3 Series

See the installation instructions packaged with the distribution joint kit for the installation procedure.

* In case the total capacity of indoor units connected after distribution exceeds the total capacity of the outdoor units, select the distribution piping size for the total capacity of the outdoor units.

Model name	Cooling capacity after distribution	Remarks
1. CZ-P680PJ2BM	68,0 kW or less	For outdoor unit
2. CZ-P1350PJ2BM	Greater than 68,0 kW and no more than 135,0 kW	For outdoor unit
3. CZ-P224BH2BM	22,4 kW or less	For indoor unit
4. CZ-P680BH2BM	Greater than 22,4 kW and no more than 68,0 kW	For indoor unit
5. CZ-P1350BH2BM	Greater than 68,0 kW and no more than 135,0 kW	For indoor unit

Piping size for 3-Pipe ECOi EX MF3 Series

1. CZ-P680PJ2BM

For outdoor unit side (capacity after distribution joint is 68,0 kW or less).

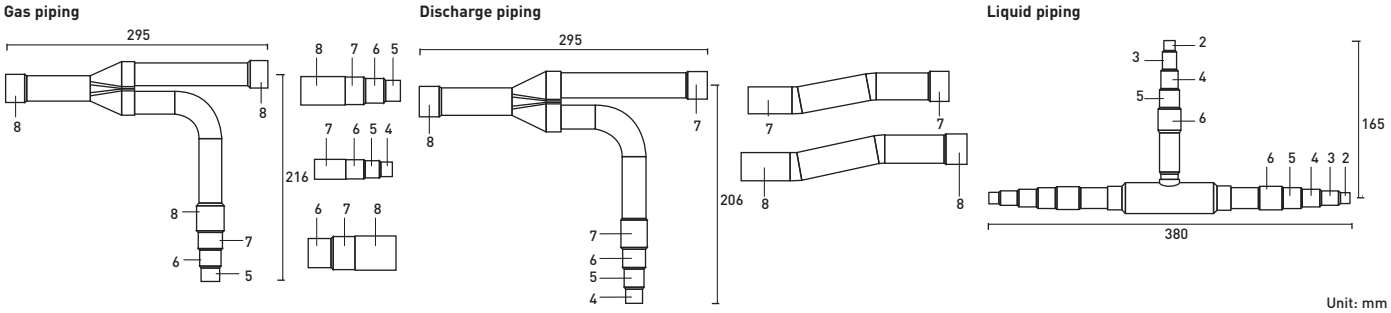

Unit: mm

2. CZ-P1350PJ2BM

For outdoor unit side (capacity after distribution joint is greater than 68,0 kW and no more than 135,0 kW).

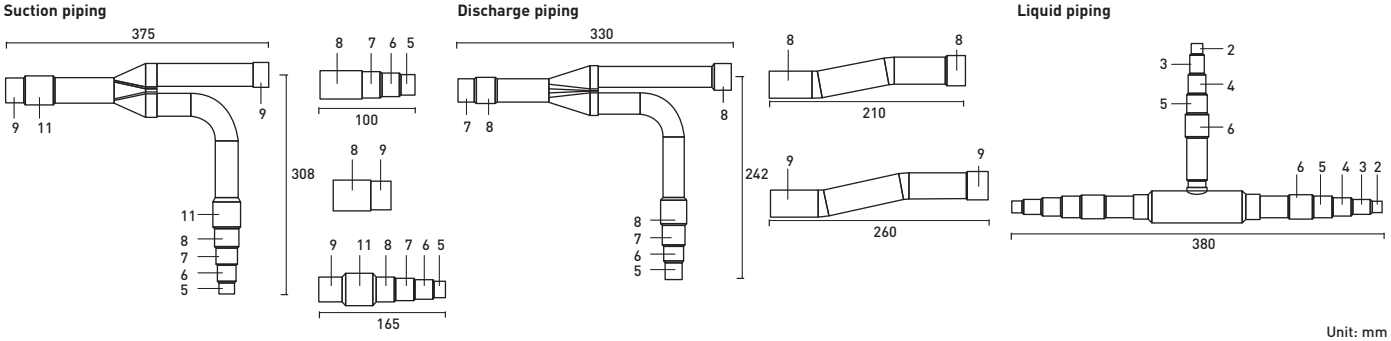

Unit: mm

3. CZ-P224BH2BM

For indoor unit side (capacity after distribution joint is 22,4 kW or less).

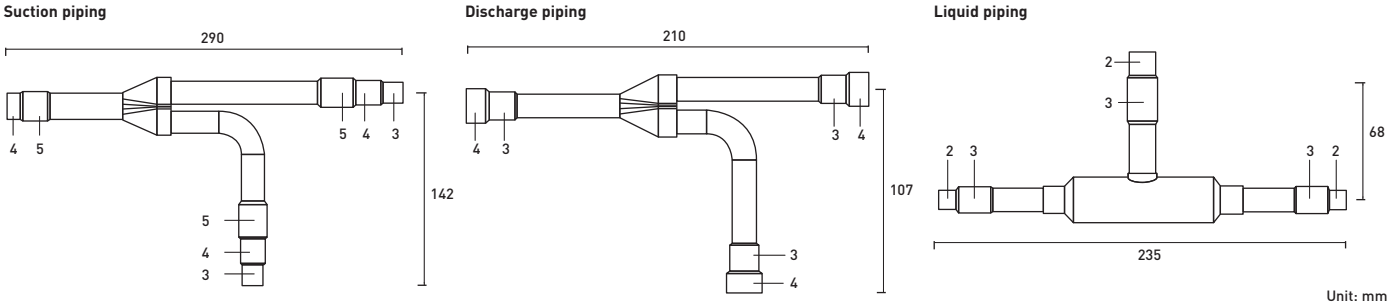

Unit: mm

Size of connection point on each part (shown are inside diameters of piping)

Size		Part 1	Part 2	Part 3	Part 4	Part 5	Part 6	Part 7	Part 8	Part 9	Part 10	Part 11	Part 12	Part 13	Part 14
Dimension	mm	6,35	9,52	12,70	15,88	19,05	22,40	25,40	28,57	31,75	34,92	38,10	41,28	44,45	50,80
	Inches	1/4	3/8	1/2	5/8	3/4	7/8	1	1 1/8	1 1/4	13/8	11/2	15/8	13/4	2

4. CZ-P680BH2BM

For indoor unit side (capacity after distribution joint is greater than 22,4 kW and no more than 68,0 kW).

Suction piping

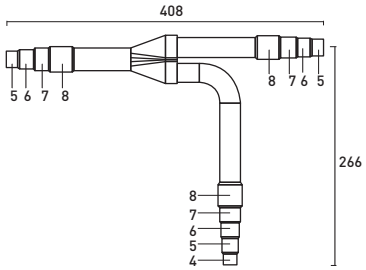

Discharge piping

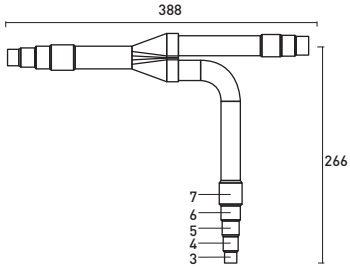

Liquid piping

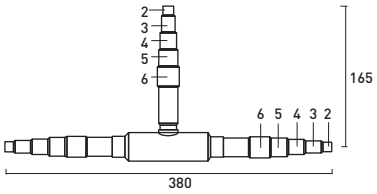

Unit: mm

5. CZ-P1350BH2BM

For indoor unit side (capacity after distribution joint is greater than 68,0 kW and no more than 135,0 kW).

Suction piping

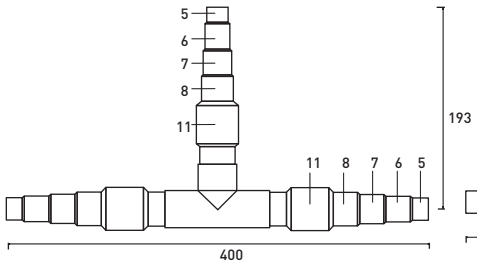

Discharge piping

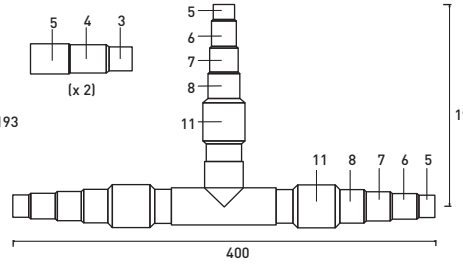

Liquid piping

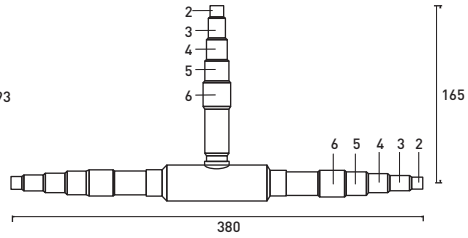

Unit: mm

Header pipe set for 3-Pipe ECOi EX MF3 Series

CZ-P4 HP3C2BM

Header pipe model for 3-Pipe systems.

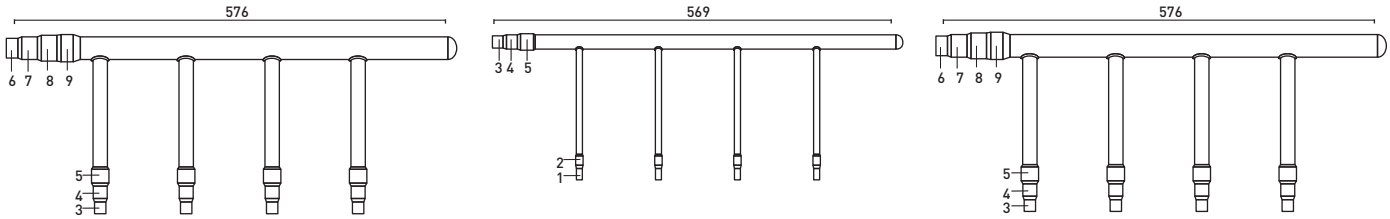

Size of connection point on each part (shown are inside diameters of piping)

Size		Part 1	Part 2	Part 3	Part 4	Part 5	Part 6	Part 7	Part 8	Part 9	Part 10	Part 11
Dimension	mm	6,35	9,52	12,70	15,88	19,05	22,40	25,40	28,57	31,75	34,92	38,10
	Inches	1/4	3/8	1/2	5/8	3/4	7/8	1	1 1/8	1 1/4	13/8	11/2

Distribution joint Kits for Mini ECOi LE Series

CZ-P160BK2BM

For indoor unit (capacity after distribution joint is 22,4 kW or less).

Gas piping

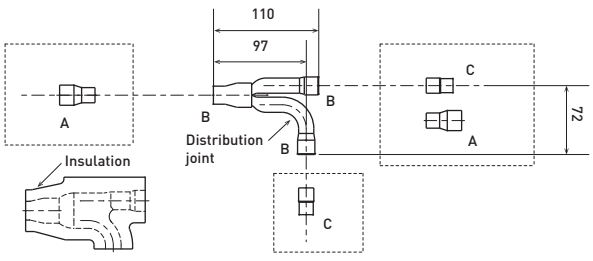

Liquid piping

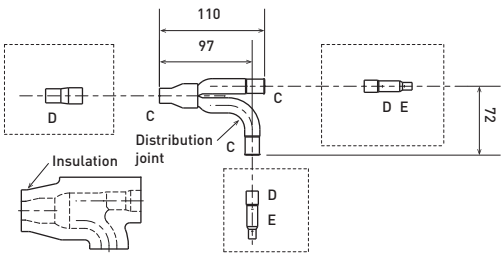

Unit: mm

Size of connection point on each part (shown are inside diameters of piping)

Size		Part A	Part B	Part C	Part D	Part E
Dimension	mm	19,05	15,88	12,70	9,52	6,35
	Inches	3/4	5/8	1/2	3/8	1/4

Accessories and Control

Distribution joint kits

CZ-P680PH2BM
ECOi 2-Pipe for outdoor unit (68,0 kW or less).

CZ-P1350PH2BM
ECOi 2-Pipe for outdoor unit (more than 68,0 kW).

CZ-P224BK2BM
ECOi 2-Pipe for indoor unit (22,4 kW or less*).

CZ-P680BK2BM
ECOi 2-Pipe for indoor unit (68,0 kW or less*).

CZ-P1350BK2BM
ECOi 2-Pipe for indoor unit (more than 68,0 kW*).

CZ-P680PJ2BM
ECOi 3-Pipe for outdoor unit (68,0 kW or less).

CZ-P1350PJ2BM
ECOi 3-Pipe for outdoor unit (greater than 68,0 kW and no more than 135,0 kW).

CZ-P224BH2BM
ECOi 3-Pipe for indoor unit (22,4 kW or less).

CZ-P680BH2BM
ECOi 3-Pipe for indoor unit (greater than 22,4 kW and no more than 68,0 kW).

CZ-P1350BH2BM
ECOi 3-Pipe for indoor unit (greater than 68,0 kW and no more than 135,0 kW).

CZ-P160BK2BM
ECOi 2-Pipe and Mini ECOi for indoor unit (22,4 kW or less*).

CZ-P4 HP3C2BM
3-Pipe header pipe.

*** In case the total capacity of indoor units connected after distribution exceeds the total capacity of the outdoor units, select the distribution piping size for the total capacity of the outdoor units.**

Heat Recovery Box

KIT-P56HR3
Heat recovery box (up to 5,6 kW) (CZ-P56HR3 + CZ-CAPE2).

KIT-P160HR3
Box recovery kit (from 5,6 kW to 16,0 kW). (CZ-P160HR3 + CZ-CAPE2).

CZ-P56HR3
Heat recovery box (up to 5,6 kW).

CZ-P160HR3
Solenoid valve kit (from 5,6 kW to 16,0 kW).

CZ-CAPE2
Heat recovery PCB.

CZ-CAPEK2
3-Pipe control PCB for Wall-mounted.

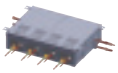

CZ-P456HR3
4 ports 3 pipe box (up to 5,6 kW per port).

CZ-P4160HR3
4 ports 3 pipe box (up to 16,0 kW per port).

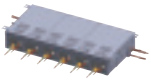

CZ-P656HR3
6 ports 3 pipe box (up to 5,6 kW per port).

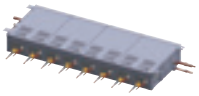

CZ-P856HR3
8 ports 3 pipe box (up to 5,6 kW per port).

CZ-P160RVK2
Rap valve kit.

Plenums

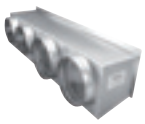

CZ-DUMPA56MF2
Air Inlet Plenum for S . .MF2E5A 15, 22, 28, 36, 45 & 56.

CZ-DUMPA90MF2
Air Inlet Plenum for S . .MF2E5A 60, 73 & 90.

CZ-DUMPA160MF2
Air Inlet Plenum for S . .MF2E5A 106, 140 & 160.

CZ-DUMPA22MMR2
Air Inlet Plenum for S . .MM1E5A 22, 28 & 36.

CZ-DUMPA22MMR3
Air Inlet Plenum for S . .MM1E5A 45 & 56.

CZ-DUMPA22MMS2
Air Outlet Plenum for S . .MM1E5A 22, 28 & 36.

CZ-DUMPA45MMS3
Air Outlet Plenum for S . .MM1E5A 45 & 56.

CZ-TREMIESPW706
Air Outlet Plenum for S-224ME1E5A / S-280ME1E5.

Wall-mounted external valve

CZ-P56SVK2
External valve (model sizes 15 to 56).

CZ-P160SVK2
External valve (model sizes 73 to 106).

Other Accessory

CZ-CNEXU1
nanoe™ X device for 4 Way 90x90 Cassette.

CZ-CENSC1
Econavi energy savings sensor.

CZ-CSRC3
Remote temperature sensor.

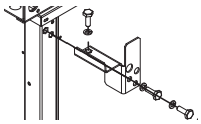

PAW-3WSK
Stacking kit for vertically stacking up to 3 WHE (4 pieces per Kit).

PRO-HT Tank accessories

PAW-VP-RTC5B-VRF
Tank Controller for ECOi system.

PAW-VP-VALV-160
Expansion valve kit 16 kW.

PAW-VP-VALV-280
Expansion valve kit 28 kW.

Smart fan coil accessories

PAW-AAIR-LEGS-1
Kits of 2 legs to support the Smart fan coil on the floor and to protect the water pipings.

PAW-AAIR-RHCABLE
Motor connection cable for units with hydraulic connections on the right.

Fan coil accessories

PAW-FC-903TC
NEW Wired remote controller for fan coil (available from Spring 2020).

PAW-FC-RC1
Advanced wired remote controller for fan coil.

PAW-FC-2WY-11/55-1
2 way valve + drain pan (for PAW-FC-D11/15/24/28/40/55-1).

PAW-FC-2WY-65/90-1
2 way valve + drain pan (for PAW-FC-D65/90-1).

PAW-FC-2WY-150
2 way valve (for PAW-FC-H150).

PAW-FC-3WY-11/55-1
3 way valve + drain pan (for PAW-FC-D11/15/24/28/40/55-1).

PAW-FC-3WY-65/90-1
3 way valve + drain pan (for PAW-FC-D65/90-1).

PAW-FC-3WY-150
3 way valve (for PAW-FC-H150).

Panels

CZ-KPU3W
Standard panel for 4 Way 90x90 Cassette.

CZ-KPU3AW
Econavi panel for 4 Way 90x90 Cassette.

CZ-KPY3AW
Panel for 4 Way 60x60 Cassette size 700x700 mm.

CZ-KPY3BW
Panel for 4 Way 60x60 Cassette size 625x625 mm.

CZ-02KPL2
Panel for 2 Way Cassette (for S-22 to S-56 models).

CZ-03KPL2
Panel for 2 Way Cassette (for S-73 models).

CZ-KPD2
Panel for 1 Way Cassette.

VRF Smart Connectivity+

Panasonic Schneider Electric

SER8150R0B1194
Remote Controller Panasonic Net Con, RH, No PIR, R1/R2.

SER8150R5B1194
Remote Controller Panasonic Net Con, RH, PIR, R1/R2.

VCM8000V5094P
Wireless Zigbee Pro module / Green Com card.

SEC-TEA-R-230-5045
Smart Terminal Controller ZigBee Pro High Power, External Antenna, 4UI/4AO/5DO, 220-240 VAC.

SEC-TEA-R-24-5045
Smart Terminal Controller ZigBee Pro High Power, External Antenna, 4UI/4AO/5DO, 24 VAC.

MPM-UN-0I4-5045
Universal network controller with Building Expert and StruXureWare integration, High Power, 6 I /60, Modbus.

MPM-RAEC-5045
Universal network controller Cable extension.

HRCEP14R
Hotel Room Expansion Module 14 indoor units.

HRCPBG28R
Hotel Room Controller 28 indoor units.

HRCPDG42R
Hotel Room Controller w/Display 42 indoor units.

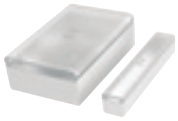

SED-WDC-G-5045
Door / window wireless sensor.

SED-MTH-G-5045
Wall / ceiling (motion) wireless sensor.

SED-CO2-G-5045
CO_2 sensor.

SED-TRH-G-5045
Sensor with room temperature and humidity.

SED-WLS-G-5045
Water leakage sensor.

FAS-00
Cover frame. Silver.

FAS-01
White.

FAS-03
Glossy translucent white.

FAS-05
Light tan wood.

FAS-06
Dark brown wood.

FAS-07
Dark black wood.

FAS-10
Brushed steel finish.

Controller and touch controllers for Hotels with Dry Contacts

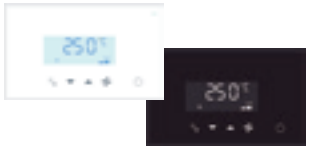

PAW-RE2C4-MOD-WH
Modbus RS-485 touch room controller with I/O, White.

PAW-RE2C4-MOD-BK
Modbus RS-485 touch room controller with I/O, Black.

PAW-RE2D4-WH
Touch display control with 2 digital inputs, White.

PAW-RE2D4-BK
Touch display control with 2 digital inputs, Black.

Hotel sensors for Dry Contacts

PAW-WMS-DC
Wall motion sensor 24 V.

PAW-WMS-AC
Wall motion sensor 240 V AC.

PAW-CMS-DC
Ceiling motion sensor 24 V.

PAW-CMS-AC
Ceiling motion sensor 240 V AC.

PAW-24DC
Power supply 24 V.

PAW-DWC
Door or window contact.

Accessories and Control

Centralised Controls. BMS System. PC Base

CZ-CSWKC2
PAIMS Basic software.

CZ-CFUNC2
Communication adaptor.

CZ-CSWAC2
PAIMS Consumption calculation control.

CZ-CSWBC2
PAIMS - BACnet interface.

CZ-CSWGC2
PAIMS - Layout display.

CZ-CSWWC2
PAIMS - Web application.

Panasonic AC Smart Cloud

CZ-CFUSCC1
Panasonic AC Smart Cloud. Cloud internet control. Up to 128 groups. Controls 128 units.

PAW-MVN0AC-V
PAW-MVN0AC-K
3G communication package (SIM Card included). V, K: Depending on countries.

Centralised Controls. Connection with 3rd Party Controller

CZ-CAPDC2
Serial parallel device controlling outdoor units, up to 4 units.

CZ-CAPC3
Adaptor for ON/OFF control of external devices.

CZ-CAPBC2
Mini series parallel device controlling indoor units, maximum 1 group and 8 indoor unit.

CZ-CFUNC2
Communication Adaptor. Up to 128 groups. Controls 128 units.

Accessories Interfaces

CZ-CAPWFC1
Commercial WLAN Adaptor.

PAW-AC2-MBS-16P
PAW-AC2-MBS-64P
PAW-AC2-MBS-128P
Modbus Interface for 16, 64 or 128 indoor units.

PAW-AC2-KNX-16P
PAW-AC2-KNX-64P
KNX Interface for 16 or 64 indoor units.

PAW-AC2-BAC-16P
PAW-AC2-BAC-64P
PAW-AC2-BAC-128P
BACnet Interface for 16, 64 or 128 indoor units.

PAW-RC2-KNX-1i
KNX Interface.

PAW-RC2-MBS-1
Modbus Interface.

PAW-RC2-MBS-4
Modbus interface to control 4 indoor/groups.

PAW-AC-KNX-64
KNX Interface for 64 indoor units.

PAW-AC-KNX-128
KNX Interface for 128 indoor units.

PAW-AC-MBS-64
Modbus Interface for 64 indoor units.

PAW-AC-MBS-128
Modbus Interface for 128 indoor units.

PAW-TM-MBS-RTU-64
Modbus Interface for 64 indoor units.

PAW-TM-MBS-TCP-128
Modbus Interface for 128 indoor units.

PAW-MBS-TCP2RTU
ModBus RTU Slave devices.

PAW-RC2-BAC-1
BACnet Interface.

PAW-AC-BAC-64
BACnet Interface for 64 indoor units.

PAW-AC-BAC-128
BACnet Interface for 128 indoor units.

CZ-CAPRA1
RAC interface adapter for integration into P-Link, plus external input and alarm/status output.

CZ-CLNC2
Lonworks® Interface controls up to 16 groups and 64 indoor units.

Individual Controls

CZ-RTC6
NEW Wired remote controller (non-wireless).

CZ-RTC6BL
NEW Wired remote controller with Bluetooth®.

CZ-RTC5B
Design wired remote controller with Econavi function and datanavi.

CZ-RTC2
Standard wired remote controller for Floor-standing (P1).

CZ-RWS3 + CZ-RWRU3W
Infrared remote controller for 4 Way 90x90 Cassette.

CZ-RWS3
Infrared remote controller for Wall-mounted and 4 Way 60x60 with panel and Floor Console.

CZ-RWS3 + CZ-RWRL3
Infrared remote controller for 2 Way Cassette.

CZ-RWS3 + CZ-RWRD3
Infrared remote controller for 1 Way Cassette.

CZ-RWS3 + CZ-RWRT3
Infrared remote controller for Ceiling.

CZ-RWS3 + CZ-RWRC3
Infrared remote controller for all indoor units.

Centralised Controls

CZ-64ESMC3
System Controller with Schedule timer. Operation with various function from center station.

CZ-ANC3
Central ON/OFF controller, up to 16 groups, 64 indoor units.

CZ-256ESMC3
Simplified load distribution ratio (LDR) for each tenant. Intelligent Controller (Touch screen panel).

Accessories Cables

CZ-T10
Cable for all the T10 functions.

PAW-FDC
Cable to operate external EC fan.

PAW-OCT
Cable for all option monitoring signals.

PAW-EXCT
Cable with force Thermo OFF/leakage Detection.

Accessories PCB

PAW-T10
T10 interface PCB with digital and relay connections.

PAW-ECF
PCB for fan speed control of external EC Fan.

R-22 Replacement Kit

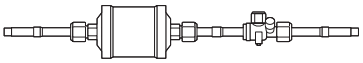

CZ-SLK2
Replacement kit for R-22.

Pump Down System

PAW-PUDME1A-1
ECOi 2-Pipe Pump down for 1 outdoor unit system.

PAW-PUDME1A-2
ECOi 2-Pipe Pump down for 2 outdoor units system.

PAW-PUDME1A-3
ECOi 2-Pipe Pump down for 3 outdoor units system.

PAW-PUDMF2A-1
ECOi 3-Pipe Pump down for 1 outdoor unit system.

PAW-PUDMF2A-2
ECOi 3-Pipe Pump down for 2 outdoor units system.

PAW-PUDMF2A-3
ECOi 3-Pipe Pump down for 3 outdoor units system.

PAW-PUDME1A-1R
ECOi 2-Pipe Pump down for 1 outdoor unit system + Receiver Kit 30L.

PAW-PUDME1A-2R
ECOi 2-Pipe Pump down for 2 outdoor units system + Receiver Kit 30L.

PAW-PUDME1A-3R
ECOi 2-Pipe Pump down for 3 outdoor units system + Receiver Kit 30L.

PAW-PUDMF2A-1R
ECOi 3-Pipe Pump down for 1 outdoor unit system + Receiver Kit 30L.

PAW-PUDMF2A-2R
ECOi 3-Pipe Pump down for 2 outdoor units system + Receiver Kit 30L.

PAW-PUDMF2A-3R
ECOi 3-Pipe Pump down for 3 outdoor units system + Receiver Kit 30L.

PAW-PUDRK30L
Receiver Kit 30L.

Control and Connectivity

Panasonic has developed the largest range of control systems to offer the best option for commercial needs. From the individual remote controller for the residential single units up to the newest technology capable of controlling your building anywhere in the world. The simple to use cloud software can even be used from a portable device.

VRF Smart Connectivity+

Schneider Electric

Through thorough energy management, Panasonic's VRF Smart Connectivity is a completely new, state-of-the-art solution providing energy saving and comfort as well as simple installation, operation and running.

VRF Smart Connectivity+ offers efficient energy management and a new air conditioning control solution with high IAQ (indoor air quality).

Energy management system for rooms	Each room is monitored by high-precision sensors, making it possible to make every room's temperature comfortable without wasting energy.
Management system for the entire building	A Building Energy Management System (BEMS) can also be connected for Plug & Play centralised control of the building's entire energy consumption.

Advantages

Dramatic reduction of OpEx with outstanding IAQ.
- 3 Built-in sensors: Temperature, RH and occupancy
- ZigBee wireless sensors: CO_2 / temperature / RH%, window / door, ceiling / wall / water leakage
- Relay Pack, Hotel Room Controller

User-/owner-friendly.
- Colour touch screen
- Simple and easy to use
- 22 languages
- Easy-to-understand error description

Ultimate customisation.
- Customisable colour background
- Custom display/icons, messages
- Programmable logic (also stand alone)
- Various controls and various external connection devices

Easy design and Plug & Play to reduce CapEx.
- Simple Plug & Play VRF connection to Building Energy Management System (BEMS)
- Stand alone or BEMS connected
- Easy installation of ZigBee sensors

VRF Smart Connectivity+: New SE8000.

1 Quality air control

Optimum IAQ is realized using the CO_2 and humidity sensors. The interior environment remains comfortable, while heating and cooling costs are minimized.
The CO_2 sensor can control ventilation systems, which contribute to improving the room's air quality.

2 Room key card / cardless solutions for hotels

Solutions are provided that meet the needs of various regions and hotel grades.
Whilst the previous model's automatic detection function offered optimal air conditioning with or without a hotel room key card, the latest model enables conventional key cards to control air conditioners and other devices coordinately. The increase in the types of devices that can be connected enables customized control of any hotel room.

3 Other equipment control

One room controller manages various devices including lighting and the blinds.
A ventilation system and other external connection devices (Dry Contact input) can be connected by HRC or TE2 devices so that various control is possible with this controller alone, even without BEMS.

Energy management system for rooms

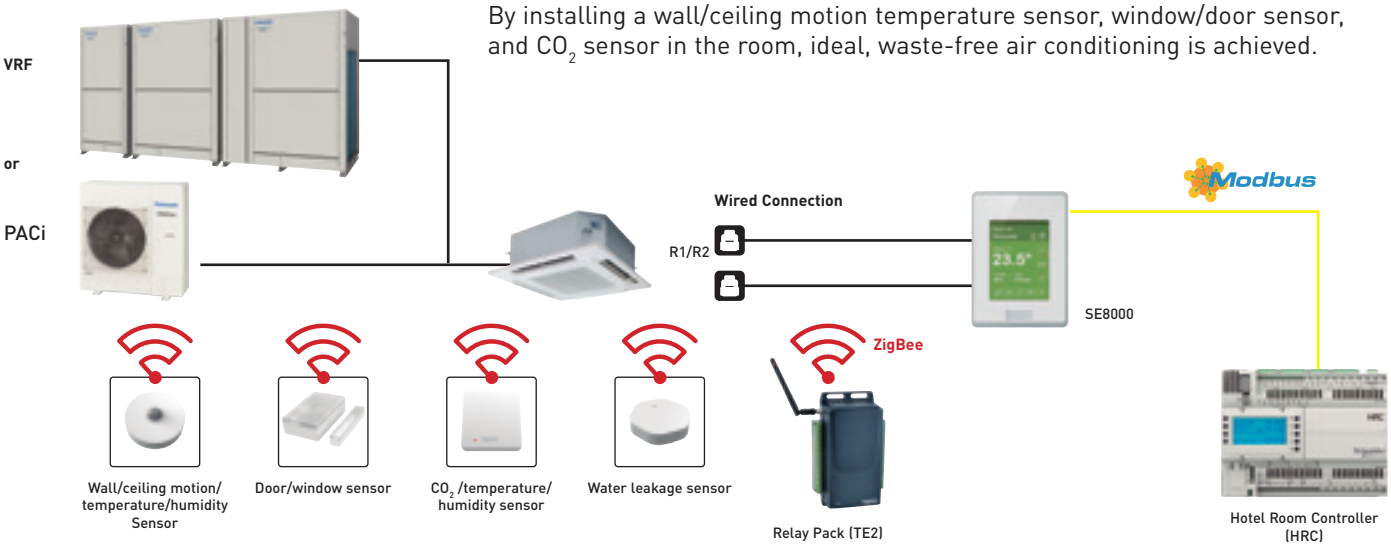

By installing a wall/ceiling motion temperature sensor, window/door sensor, and CO_2 sensor in the room, ideal, waste-free air conditioning is achieved.

Sensing & Control technology

Using sensors from Schneider Electric, high-quality occupancy control and automatic IAQ control are realised. The sensors detect the presence or absence of occupants, and the opening and closing of doors and windows to achieve the most efficient energy management for exceptional air-conditioned comfort.
Flexible installation is possible to match different applications and building features such as walls, ceilings and proximity to doors and windows. No wiring means extra installation versatility.

Batteries last for up to five years (10-year battery for CO_2 sensor) and are easy to install and replace.

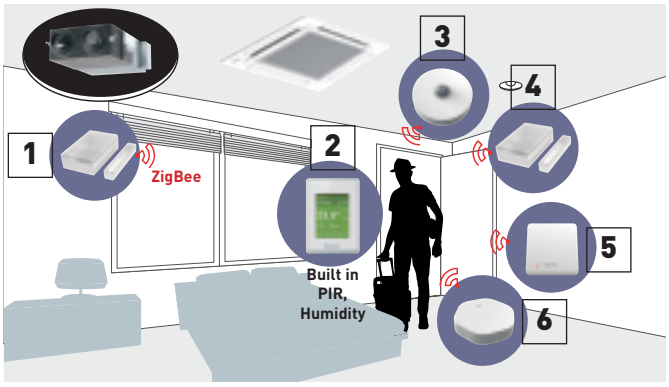

1. Window sensor (option).
2. Room controller.
3. Ceiling motion sensor (option).
4. Door sensor (option).
5. CO_2 sensor (option).
6. Water leakage sensor (option).

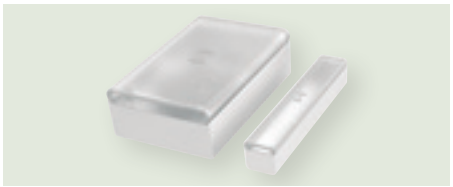

Door/window sensor.
Door and window contact detection sensor to monitor opening and closing.

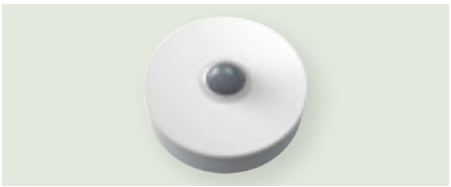

Wall/ceiling motion/temperature/humidity sensor.
Wall and ceiling sensor to detect the presence or absence of occupants.

CO_2 /temperature/humidity sensor.
Monitor indoor air quality, review data on interfacing devices, and control fresh air inside customisable zones.

Water leakage sensor.
Two sensing pads under the body activate when water is present between the two pads. Detecting the water, the sensor reports the event to the controller (and BEMS).

Relay Pack (TE2).
Wireless programmable terminal equipment controllers for HVAC equipment and pulse counting. Includes local memory to store fail safe control sequence.

Hotel Room Controller (HRC).
The Hotel Room Controller controls connected guest room devices and aggregates data, making it visible to guest room and property management systems.

Management system for the entire building

The smarter solution to simplify energy management, optimise building efficiency and drive savings.

Plug & Play BEMS connection

With the SE8000, connection to BEMS is extremely easy. Better still, a remote controller is all that's needed to enable use as a stand alone system. In addition to dramatically reducing the burden on system integrators, this cuts costs.

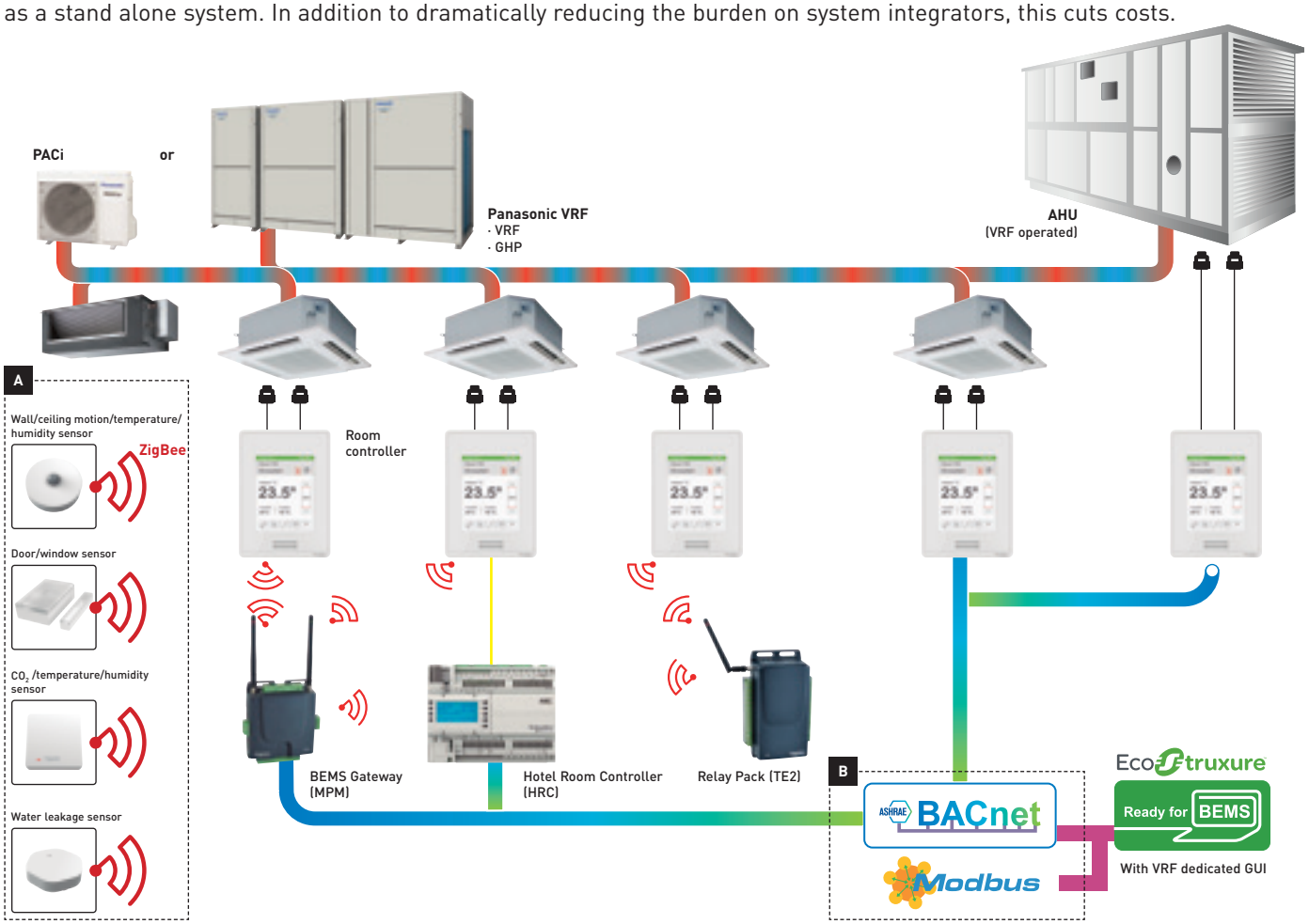

A SE8000 smart controller with direct hub to ZigBee® Pro sensors.
Great occupancy and IAQ control.
Ex: Hotel room occupancy check by PIR sensor, IAQ by CO_2 sensor, door / window contacts.

B BACnet MS/TP and Modbus RTU are embedded.

C For Schneider Electric BEMS connection, Panasonic VRF widgets enable easy Plug & Play. Better understanding for VRF as a chiller system.

BEMS Gateway (MPM).
Multi-Purpose Management devices enable the control, monitoring, and management of entire sites via Schneider Electric's EcoStruxure™ BMS system.

C

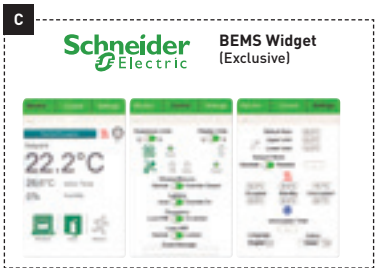

* Graphic shows combination of products from Panasonic, Schneider Electric and others. Please consult authorised dealer for more details.

Reference	Description
SER8150R0B1194	Pana Net Con, RH, No PIR, SE Brand, R1R2
SER8150R5B1194	Pana Net Con, RH, PIR, SE Brand, R1R2
VCM8000V5094P	Wireless ZigBee® Pro communication card
TE2*	
SEC-TEA-R-230-5045	Smart terminal controller ZigBee® Pro high power, external antenna, 4UI/4AO/5DO, 220-240 V AC
SEC-TEA-R-24-5045	Smart terminal controller ZigBee® Pro high power, external antenna, 4UI/4AO/5DO, 24 V AC
MPM*	
MPM-UN-0I4-5045	Universal network controller with Building Expert and StruXureWare integration, high power, 6 I /6O, Modbus
MPM-RAEC-5045	Universal network controller cable extension

Reference	Description
HRC*	
HRCEP14R	Hotel room expansion module 14 indoor units
HRCPBG28R	Hotel room controller 28 indoor units
HRCPDG42R	Hotel room controller w/display 42 indoor units
ZigBee Sensors	
SED-CO2-G-5045	Sensor with room CO_2, temperature and humidity
SED-TRH-G-5045	Sensor with room temperature and humidity
SED-WDC-G-5045	Door/window sensor
SED-MTH-G-5045	Wall/ceiling motion/temperature/humidity sensor
SED-WLS-G-5045	Water leakage sensor

Reference	Description
FAS-00	Cover frame. Silver
FAS-01	White
FAS-03	Glossy translucent white
FAS-05	Light tan wood
FAS-06	Dark brown wood
FAS-07	Dark black wood
FAS-10	Brushed steel finish

* Those accessories require system integrator support on site.

Smart management solutions

1 Hotels

Room key card or key cardless solutions for hotels.
The SE8000 and ZigBee sensor automatic detection function offer optimal air conditioning regardless of whether there is a hotel room key or not. Sensors detect the presence or absence of occupants and the opening and closing of doors and windows for the optimum air-conditioned environment guests expect. Automatic control ensures the most efficient operation when guests are away or when windows are open. This contributes to an appreciable reduction in operation costs.

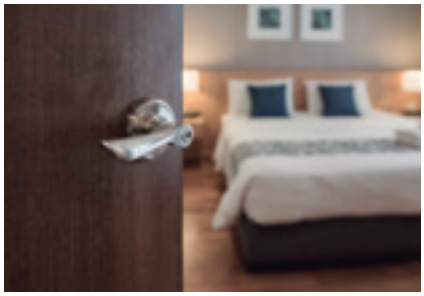

1. Remote sensing & IAQ contorol.
In addition to detecting a room's temperature, humidity and CO_2 concentration, ZigBee remote sensors detect the opening/closing of windows and doors, and the presence/absence of people in a room Various IAQ controls and detailed energy savings are possible by using TE2 (Relay Pack) based on this detected information.

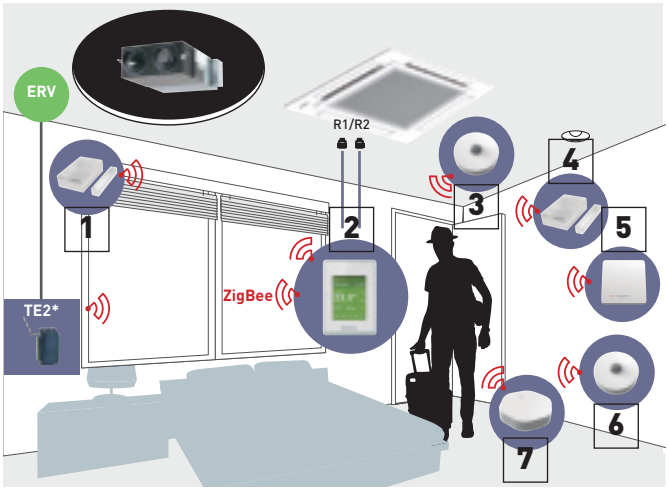

2. BEMS Connectivity.
With MPM as the BEMS gateway and by setting HRC as the guestroom controller, sensing, control and BEMS connection can be realized in coordination with SE8000!

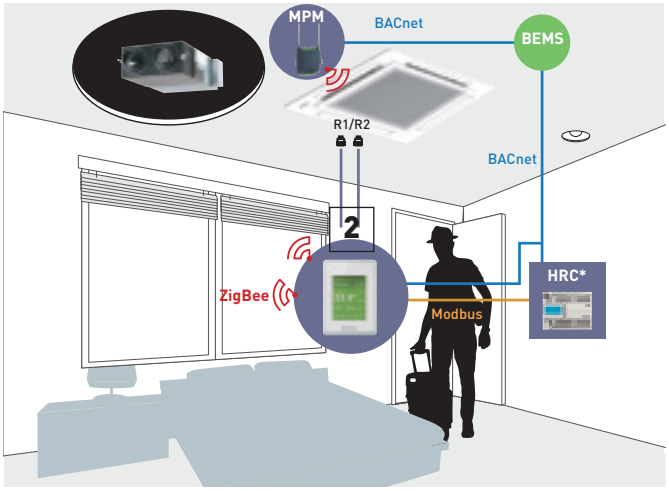

3. Key cardless control.
The introduction of TE2 and HRC enables conventional wired keycards to be connected to the system so that it is possible to meet the specific requirements of various hotel and room types.

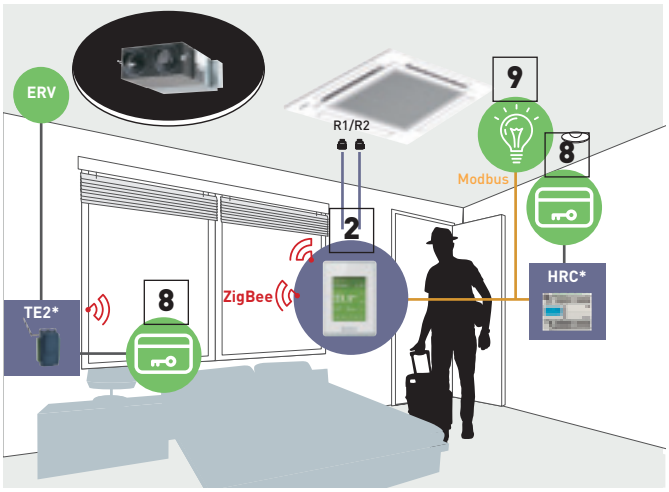

4. Other control
The introduction of TE2 and HRC enables the ON/OFF control of devices having Dry Contact input, such as ventilation, lighting and blinds.

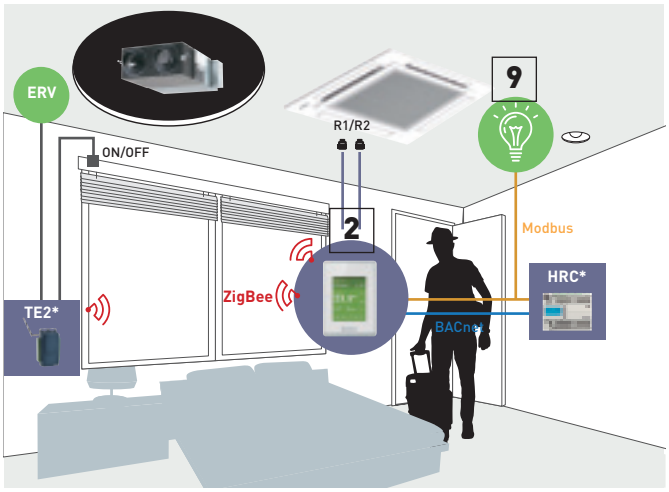

1. Window sensor*.
2. Room controller (22 languages).
3. Ceiling motion sensor.
4. Door sensor*.
5. CO_2/Temp. + RH% sensor.
6. Wall motion sensor.
7. Water leakage sensor.
8. Key card (wired).
9. Light control.

* In electrical distribution panel (field supply)

2 Small and medium offices

CO_2 sensors (option) and humidity sensors.
CO_2 sensors (option) take measurements in units of ppm, and humidity sensors enable fine air quality control. This creates the most comfortable space for occupants while contributing to improved employee satisfaction.

3 Super markets

Humidity sensors.
Humidity sensors enable automatic dehumidification for the optimum IAQ regardless of climatic conditions. This creates an even more comfortable environment for customers, employees, and products themselves.

Innovative and unrivalled advantages

Colour and design to match office interiors.
Colour combinations and design can be set to match different facilities.

Easy-to-understand error description.
Error description during an emergency is easy to understand, enabling staff to respond quickly.

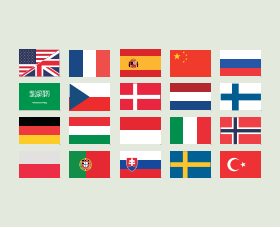

Customisation in 22 languages possible.
The display can be customised to match the native languages of guests to enable smooth, stress-free communication for hospitality at its finest.

Programmable logic.
Full customisation of remote controller logic possible, and updating to match conditions.

Smart connectivity devices

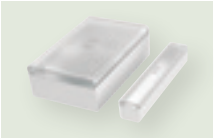

SED-WDC-G-5045
Door/window sensor.

SED-CO2-G-5045
CO_2 temperature/ humidity sensor.

SED-MTH-G-5045
Wall/ceiling motion/ temperature/humidity sensor.

SED-WLS-G-5045
Water leakage sensor.

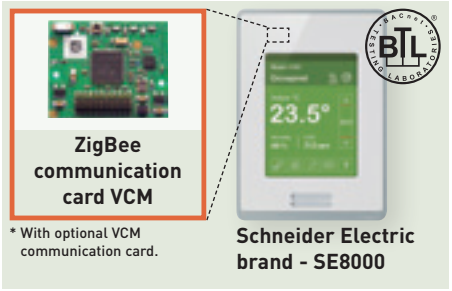

Features

- Up to 5 year battery life (batteries included)
- Battery life of CO_2 sensor up to 10 years.
- Battery level data point
- Sensor points visible when SE8000 is integrated via BACnet MS/TP
- Sensor status and battery level visible when SE8150 is integrated via ZigBee® Pro
- Integration to BMS only recommended when each MPM is connected to Ethernet and set as a ZigBee® coordinator node

Panasonic AC Smart Cloud

With Panasonic AC Smart Cloud, have your business under control, and start saving!

PANASONIC AC SMART CLOUD

Flexible and scalable solution

· Energy saving
· Zero downtime
· Site(s) management

Centralise control of your business premises, from wherever you are, 24/7/365. It doesn't matter how many sites you have, or where they are! The AC Smart Cloud system from Panasonic allows you to have complete control of all your installations from your tablet or from your computer. In a simple click, all your units from several locations, receive status updates in real-time of all your installations, reducing potential breakdowns and optimizing costs.

Flexible solution for your business

Every time | Everywhere | Multiplatform | Internet browser

Scalable solution for your business

Small to large | 1 to multi sites | Upgrade features* | PACi / ECOi / ECO G

* Customized to meet user demand / Continuous upgrades: new functions and product introductions / IT smart management.

Panasonic AC Smart Cloud offers continuous improvement always thinking about users

e-CUT function

e-CUT functions are newly available in Panasonic AC Smart Cloud.
5 energy saving settings reduces automatically its energy consumption.

1. Set temperature auto return.
When you want to return to the set temperature after a certain time even if the temperature is changed.

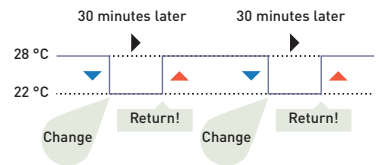

2. Unattendted auto shut off.
When you want to operate outside of a schedule but to monitor and stop automatically.

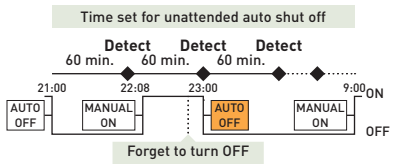

3. Set temperature range limit.
When you want to limit the temperatures that can be set.

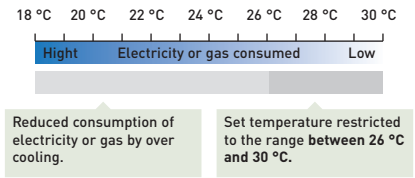

4. Energy saving timer / efficient operation setting.
Specify time slots when you want operation capacity reduced.

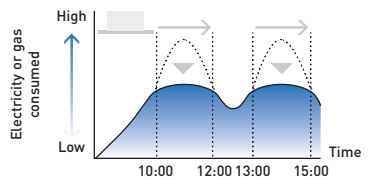

5. Demand / peak shaving settings/ peak cut settings.
Specify time slots when you want operation capacity of the outdoor units reduced.

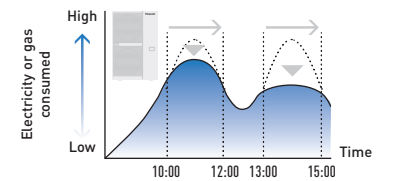

Key functions and uniqueness

Multi site monitoring.
· It doesn't matter how many sites you have, easy to manage, operate, compare sites, locations, rooms.

Powerful statistics for energy savings.
· Power consumption, capacity, efficiency level can be compared with different parameters (Yearly / monthly / weekly / daily bases)

Schedule setting.
· Yearly / weekly / holiday timer setting as you want

Maintenance notification.
· Error notification by email and with floor layout
· Maintenance notification of ECOi / ECO G outdoor units
· Remote service checker function

User customization [1].
Site administrator can create users as desired and assign customized profiles.

Main functions per user type

Function / Main Tab	Sub-Tab	Basic type (Eg.: Owners, facility managers)	Professional type (Eg.: Installers, maintenance companies)
AC setting	I_U / O_U operation details	✔	✔
	Cloud adapter (CZ-CFUSCC1) details	✔	✔
	AC maintenance		✔
	Map view	✔	✔
Energy saving function	NEW e-CUT	✔	✔
Schedule	Yearly, weekly schedule setting / view	✔	✔
Powerful statistics	Power consumption	✔	
	Capacity	✔	
	Efficiency ranking	✔	

Function / Main Tab	Sub-Tab	Basic type (Eg.: Owners, facility managers)	Professional type (Eg.: Installers, maintenance companies)
Maintenance function	Notification overview / details	✔	✔
	Maintenance settings	✔	✔
	Map view	✔	✔
	Remote service checker		✔
User account [1]	New / update user registration	✔	
System setting	Distribution group overview / details	✔	
	Cut OFF request	✔	
	Map editor		✔

One of our uniqueness is "stable and secured communication package"

· Connectivity is included in the service. Customers do not have to take time to find and prepare suitable connectivity.
· With an all inclusive service offering, the customer has peace of mind and a one stop shop for all AC Smart Cloud issues they may face including connectivity

This reduces installation time, requiring no integration with existing IT network infrastructure.

Remote service checker function

Zero down time
· Quick analysis & response
· Time & Cost saving for service maintenance task

Recording service checker parameters from wherever you are!
· Data duration: Max. 120 minutes
· Data frequency: 10 – 90 seconds
· Mode selection: With test run or Without test run
· Count down schedule setting available

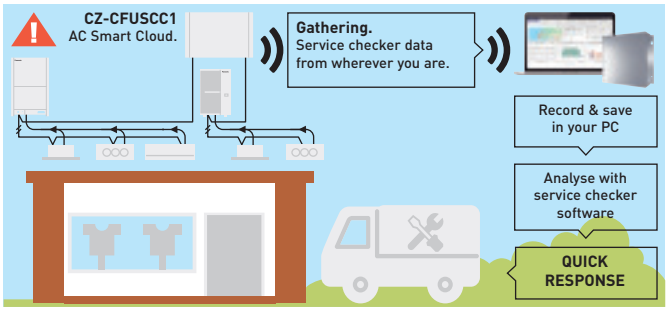

Panasonic AC Smart Cloud parts lists

*** Cloud service fee is additionally required. Please contact an authorized Panasonic dealer.**

CZ-CFUSCC1	AC Smart Cloud communication adaptor. Up to 128 groups. 128 units control
PAW-MVN0AC-V PAW-MVN0AC-K	3G communication package (SIM card included). V, K: Depending on countries [1]

1) Please contact an authorized Panasonic dealer.

Commercial WLAN Adaptor

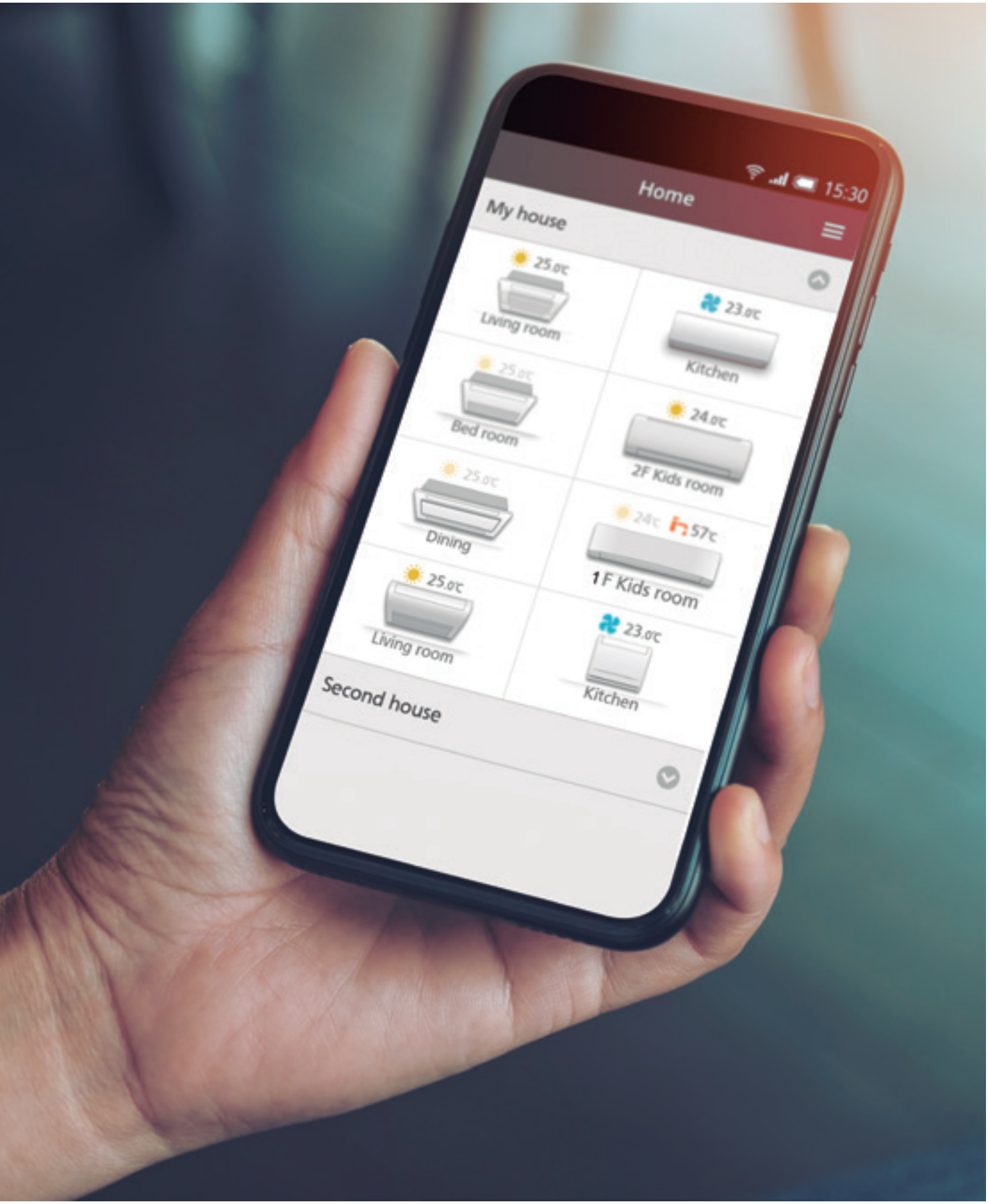

Panasonic CZ-CAPWFC1 interface adaptor, allows connection of one or a group of indoor units to Panasonic Comfort Cloud App, which provides control, monitoring, scheduling and error alerts.

Advanced smartphone control

Control PACi, ECOi and ECO G units with your smartphone from wherever and whenever you are, by using Panasonic Comfort Cloud App and Commercial WLAN Adaptor. This scalable solution is ideal for one system, one site or multiple locations. Coupling the adapter with the already feature rich systems, makes it an ideal solution for residential and commercial applications.

1 From 1 to 200 units

User can control up to 10 different sites, with up to 20 units / groups per site.

2 1 indoor or 1 group

One simple WLAN adaptor CZ-CAPWFC1 can be connected to 1 indoor unit or to a group (maximum 8 units).

3 Multi user

The Panasonic Comfort Cloud App allows multi-user access control. Restrict user access to specific units.

4 Easy scheduling

Complex weekly scheduling made simple. Not only for one unit, but across multiple sites and from a smartphone.

5 Energy monitor

See the estimated power consumption and compare with other periods, to see how energy consumption can be reduced even more. Check list of units that provides consumption*.

* Function available depending on the model.

6 Error codes

Error code notification through the App, provides early notification and allows for faster repair.

Connection diagram

Commercial WLAN Adaptor wiring length is 1,9 m and connects to indoor unit thru T10 connector and R1/R2 terminal connectors.

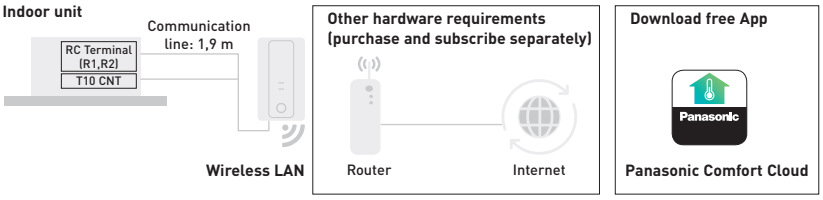

Input voltage	12 V DC (supplied from T10 connector)
Power consumption	Maximum 2,4 W
Size (H x W x D)	120 x 70 x 25 mm
Weight	190 g (including communications lines)
Interface	1 x Wireless LAN
Wireless LAN Standard	IEEE 802,11 b/g/n
Frequency range	2,4G Hz band
Operation range	0 ~ 55 °C, 20 ~ 80 RH%
Connectable indoor unit	1 unit
Length of communication line	1,9 m (included in the shipment)

Cloud control is available for all indoor units with P-link

Compatible indoor units type: Model code starting with "S-" (excludes S-80/125MW1E5).
Incompatible indoor units type: Model code starting with "PAW-", "FY-" and S-80/125MW1E5.

Basic wiring diagram

If there is one indoor unit or if there are multiple indoor units, connect one WLAN adaptor and one remote controller. A remote controller must be connected and it should be set as the "main unit" in the main-sub remote controller settings.

Example when there is 1 indoor unit.

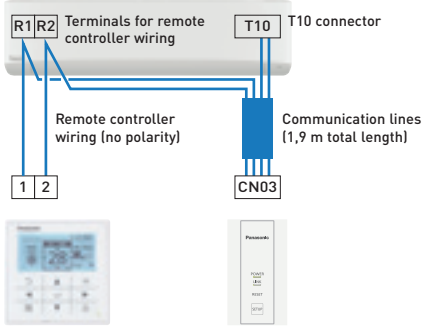

Example when there are multiple indoor units.

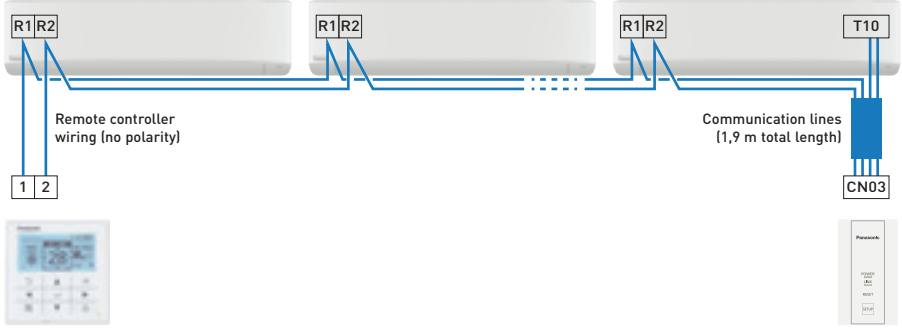

New wired remote controller - CZ-RTC6 / CZ-RTC6BL / CZ-RTC6BLW

NEW 2020

1 Intuitive control with stylish design profile

- Simple operation at a glance
- Clean face with full flat & black LCD display
- Compact body only 86x86

2 Control comfort with your smartphone for multi users

- Flexible control options with IoT integration
- New Panasonic H&C Control App for daily remote control operation
- Panasonic Comfort Cloud App for remote operation 24/7/365

3 Easy maintenance with service support App

- Quick and easy App set-up for system setting
- Panasonic H&C Diagnosis App enables the user to obtain detailed system operation data

Flexible control option with IoT integration

New wired remote controller series are fully integrated with IoT solutions developed by Panasonic. Detailed operation, maintenance setting and service operation are all possible with smartphone or tablet.

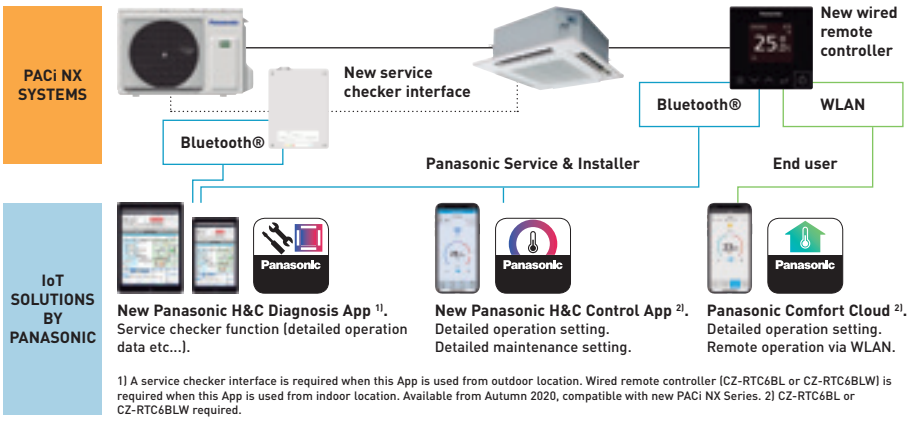

1) A service checker interface is required when this App is used from outdoor location. Wired remote controller (CZ-RTC6BL or CZ-RTC6BLW) is required when this App is used from indoor location. Available from Autumn 2020, compatible with new PACi NX Series. 2) CZ-RTC6BL or CZ-RTC6BLW required.

This series give you comfort and control, meeting the varying needs of multi users. Accessible, flexible and convenient. Perfectly meeting modern control needs.

1. Mode Heat/Cool/Dry/Fan/ Auto
2. Fan speed (5levels)
3. Air flow direction
4. nanoe™ X / Econavi setting
5. Menu
6. Down
7. Up
8. Enter
9. ON/OFF

Intuitive operation with simple & modern design panel

Sophisticated design with black flat panel and compact body. From residential to commercial, the wired remote controller series perfectly matches with all kinds of modern building.
It enables user to recognize each function with a simple glance.

* Available functions can be referred in "Basic function list" below.

Wired remote controller line-up

		WLAN	Bluetooth®
CZ-RTC6	Non-wireless	—	—
CZ-RTC6BL	Bluetooth®	—	✔
CZ-RTC6BLW*	WLAN & Bluetooth®	✔	✔

* Available from Autumn 2020, compatible with new PACi NX Series.

Basic specification

Model			**CZ-RTC6 (Non-wireless)**	**CZ-RTC6BL (Bluetooth®)**
Input voltage		V DC	16 (supplied from indoor unit)	
Power consumption			TBC	
Size (H x W x D)		mm	86 x 86 x 25	
Weight		kg	0,1	
Operation range - Temperature / Humidity			0 ~ 40 °C / 20 ~ 80 %	
Temperature setting interval		°C	0,5	
Connectable indoor units			Maximum 8 units (within remote control group)	
Clock	Precision		—	± 30 seconds/month (at normal temperature 25 °C)
	Holding time		—	24 hours
For Bluetooth® Apps			—	iOS: 10.0 or later Android™: 6.0 or later
Bluetooth®			—	Version 4.2 or later

Basic function list

Control item	**Controllability**	**CZ-RTC6**	**CZ-RTC6BL**	**CZ-RTC6BLW***
Outdoor compatibility	PACi (PZH2, PZ2 Series)	✔	✔	—
	New PACi (PZH3, PZ3 Series)	✔	✔	✔
	ECOi / ECO G	✔	✔	—
Basic operation	Operation, Mode, Temperature setting, Air flow volume, Air flow direction	✔	✔	✔
Timer function	Time display	—	✔	Coming soon
	Easy ON/OFF timer	—	✔	
	Weekly program timer	—	✔	
Energy saving	Outing function	✔	✔	
	Temperature auto return	—	✔	
	Temperature setting range limitation	—	✔	
	Energy monitoring	—	✔	

Control item	**Controllability**	**CZ-RTC6**	**CZ-RTC6BL**	**CZ-RTC6BLW***
Maintenance	System failure information	✔	✔	Coming soon
	Alarm display	✔	✔	
	Service contact registration	—	✔	
	Filter sign reset	✔	✔	
Others	Key lock	✔	✔	
	Ventilation fan control	—	✔	
	Display contrast adjustment	✔	✔	
	Rotation control	—	✔	
	Quiet operation mode	—	✔	
	Wireless control	—	—	

* Available from Autumn 2020.

New Panasonic H&C Control App

Panasonic H&C Control App for daily remote control operation and quick system setting via Bluetooth®.

* User interface image may be updated without notification.

Home screen

Basic settings

Statistics

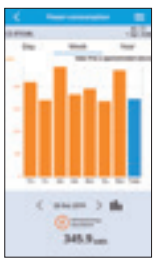

Weekly timer

Advanced settings

Panasonic

New service checker interface

The new service checker interface provides easy access to service parameters and service checker data via Bluetooth®.
· A new service checker interface* for PACi NX Series
· Bluetooth® connection
· Panasonic H&C Diagnosis App

* Available as a spare part, compatible with new PACi NX Series.

Input voltage	220-240 V ~ 50-60 Hz (supplied from outdoor unit)
Power consumption	Maximum 2,4 W (including outdoor units)
Size (H x W x D)	175 x 125 x 50 mm
Weight	—
Interface	Bluetooth® 4.2 or later
Frequency range	2,4 GHz band
Operation range - Temperature / Humidity	0 ~ 40 °C / 20 ~ 80 % (no condensation)

* Frequency band in which the ratio equipment operates; 2402 - 2480 MHz.
* Maximum radio-frequency power transmitted in the frequency bands in which the ratio equipment operates; +0 dBm.

Panasonic

Remote controller with Econavi

Easy to use, attractive, clear design, with new demand control functions and energy consumption display! This useful feature makes this remote controller unique!

Design

The CZ-RTC5B wired remote controller is ideal for integration into the most demanding interior architectures. The touch panel features a very sleek and easy to use display, which with its compact display is only 120 x 120 x 16 mm.

Key functions

- Easy setup of the timer and settings of the indoor unit
- Energy consumption display (for all R32 PACi line-up)
- Limitation of the energy consumption (Demand control) by timer.

Display of information

The information is mainly based on pictograms to ensure easy understanding. The minimal amount of text is available in 6 languages (English / German / French / Spanish / Italian / Polish).

The screen is back lit to enable reading even during the night.

Easy access to the menus.
With the new pictograms, the navigation, the selection and the settings are simple and easy to follow.

Basic function (operation display & indication)

All functions are easily available on the remote controller.
· OFF/ON timer · Weekly timer · Quiet operation · Remote controller sensor · Operation prohibit · Filter sign · Energy saving · Centralized control indication · Mode change prohibit · Automatic temperature return · Temperature range limitation · OFF remind · Schedule demand control · Ventilation · Out Function

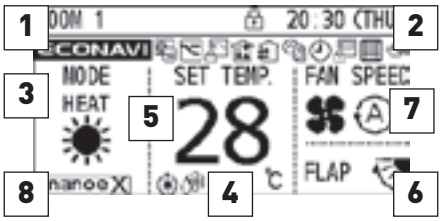

1. Name of the room (Max.16 characters)
2. Time & Day of the week
3. Mode: Hot / Cool / Dry / Fan Auto
4. Status: Heating stand-by / Defrost operation / Stand-by (GHP system)
5. Set temperature
6. Flap setting
7. Fan speed: L-H / Auto
8. nanoe™ X setting

Easy operation and quick access to all menus

1. Set temperature will be selected, when any arrow button is touched
2. Select the item (Mode or Fan speed) by left/right ◂ ▸ key
3. Change the setting by up/down ▴▾ key

Example of easy access to the functions: air direction setting

1. Select "Air direction" and press "Enter" key
2. Select the unit number by up/down ▴▾ key
3. Select the flap position by up/down ▴▾ key
4. Press "Return" key to go back the Menu display

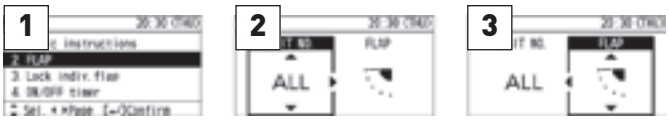

Backup control by using CZ-RTC5B

Group wiring of 2 systems of PACi can do auto individual control: Rotation operation, backup operation and support operation.

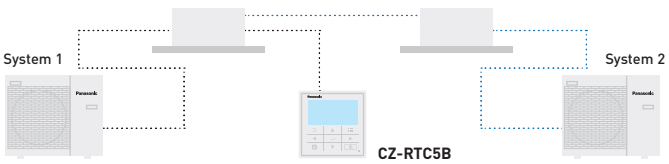

Functions available on the CZ-RTC5B

Control item	Controllability	Indoor units	
		PACi	VRF
Basic operation	Operation, Mode, Temperature setting, Air flow volume, Air flow direction	✔	✔
Timer function	Time display	✔	✔
	Easy ON/OFF timer	✔	✔
	Weekly program timer	✔	✔
Energy saving	Outing function	✔	✔
	Temperature auto return	✔	✔
	Temperature setting range limitation	✔	✔
	OFF remind	✔	✔
	Energy saving mode	✔	✔
	Schedule demand control	✔ [1]	✔
	Energy monitoring - R32	✔	—

Control item	Controllability	Indoor units	
		PACi	VRF
Maintenance	System failure information	✔	✔
	Service contact registration	✔	✔
	Filter sign (rest time display) & Reset	✔	✔
	Auto-address, Test run	✔	✔
	Sensor value monitor	✔	✔
	Simple / Detail setting mode	✔	✔
Others	Key lock	✔	✔
	Ventilation fan control	✔	✔
	Display contrast adjustment	✔	✔
	Remote controller sensor	✔	✔
	Quiet operation mode	✔ [1]	—
	Prohibit setting control from central controller	✔	✔

All specifications subject to change without notice.
1) Not available with PACi Standard R410A line up.

Datanavi

FAST AND INTUITIVE

EASY ACCESS TO MANUAL DATABASE

ACCURATE SERVICE DATA ON YOUR SMARTPHONE

Datanavi, a new way to connect.
Simple and easy support tool with your smartphone.

datanavi

Overview of datanavi system

Just holding up your smartphone to the LED display on a remote controller (CZ-RTC5B) to receive useful AC system information super fast by Panasonic Light ID Technology. Datanavi also connects to Panasonic Cloud Server for the quick view of manuals, saving data received by Light ID.

Key functions

- Scan & Save AC system info
- Easy access to manual database
- Commissioning, F-Gas check data history

What is the Light ID technology developed by Panasonic?
Visible light transmission technology, which enables to transmit information by high-speed and invisible flashing of an LED light source.

User / administrator (person in charge of AC) functions

- **Fast and intuitive.** Regular operation data, energy consumption data display
- **Easy access to data base.** Getting manuals related on demand
- **No idea what to do when an error happens?** You can share error information and contact service easily

Installer / service company functions

- **Getting technical data depends on your need**
  Service manual. Q & A list. Test run information
- **Acurate error information**

Regular operation

Energy management

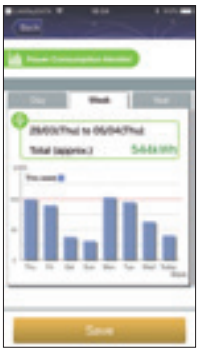

Malfunction notice

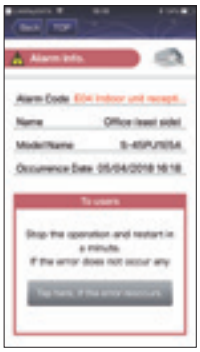

Operating manual

Test run info

Service data

* User interface image may be updated without notification.

- Simple F-gas regulation check list
- Repair speed check list

Download free Apps, try datanavi!
2 free Apps are necessary to use datanavi.

Panasonic — Download on the App Store — GET IT ON Google Play

LinkRay — Download on the App Store — GET IT ON Google Play

Intelligent controller

This controller is the smart solution for your advanced requirement in buildings.

Intuitive operation

The screens used for operations all follow a common pattern, with the screens being easy to read and easy to use.

· Enlarged screen (10,4 inch) with colour LCD
· Smartphone-like gestures (flick, swipe, touch)

Large screen display. Enlarged by 60 %.

Easy swipe or flick operation.

Swipe.
This is an operation where the finger is slid in a direction (up or down) on the touch panel. This is used to scroll slowly.

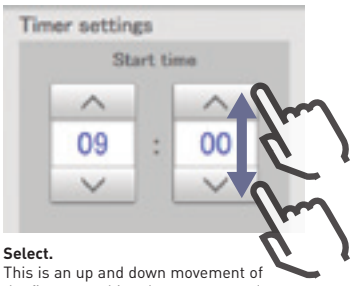

Select.
This is an up and down movement of the finger touching the screen, used to pick settings in elements such as spin boxes.

Pull out.
This is an operation where the finger on the touch panel is flicked in a direction (up or down). This is used to scroll quickly.

Enhanced functions for energy saving as standards

· Set temperature auto return settings, Auto shut OFF, set temperature range limit settings
· Demand control function

Screen of set temperature auto return setting.

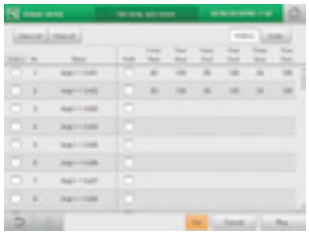

Auto shut OFF.

Screen of outdoor demand control.

· Outdoor demand input and timer settings possible
· Indoor can be set at ±1 °C/ ±2 °C or thermostat OFF
· Indoor units controlled in sequence at 10-minute intervals

Energy visualization

· Energy saving plans are supported with graph display function
· Displays electricity & gas usage distribution

Screen of graph display.

Useful parameters are shown for your better energy saving.
Ex.) Bar graph:

Indoor unit: Total operating time, thermostat ON operation time (Min.)
Amount used (electricity, gas)
Electricity or gas charges
Outdoor unit: Outdoor unit operation cycles (# cycles)
Engine time in operation (Hrs.)
Cumulative Inverter power output
Cumulative PV power output

Pulse value selection per different data intervals 1 hour/1 day/ 1 month compared with last year.

Main function

Gesture function (flick, swipe, touch)	✔
Graph display (trends, comparisons)	✔
Web functions (Max. 64 users)	✔
Recipient setting for warning email	✔ (Maximum 8)
Automatic return to setting temperature	✔
Limitation of setting temperature range	✔
Left-on prevention	✔
Quiet operation of outdoor unit	✔
Occupant sensor linkage	✔
Demand function	✔
Charge calculation	✔
Log display	✔ Warning 10000 items Status change 50000 items
Linked control Event definition 50 events, input: 32, output: 32	✔
Under maintenance (under inspection registration)	✔

Econavi Sensor

The Econavi sensor detects presence in the room, and quietly adapts the PACi or VRF air conditioning system in order to improve comfort and energy savings.

- Detects human activity and adjusts temperature by 2 degrees (up or down) to optimize comfort and efficiency
- If there is no activity detected for a set time period, the Econavi will stop the unit or move to a new temperature previously set
- The Econavi device is installed independently of the indoor unit, and is located in the area best suited for detection

Applications

Saving energy for offices: If the air conditioning is left on after the last employee leaves the office, Econavi will automatically react, reducing or stopping the system. Increased comfort in hotel rooms: When presence is detected in the room, the temperature is automatically adjusted to achieve best comfort.

Key points

- Compatible with Cassette, Wall Mounted, Hide Away and Ceiling units
- Improves efficiency
- Better comfort
- Can be installed in the best location within the room for detection purposes

Sensor location image

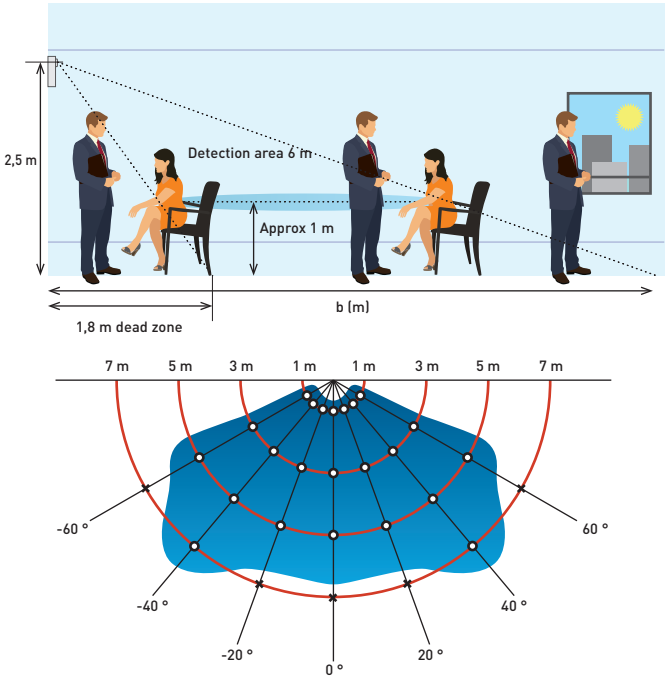

Human detection area (2,5 m height angle 30°)

Providing outstanding energy saving performance, Panasonic's Inverter system can be connected to Econavi to detect when energy is being wasted. Econavi senses the presence or absence of people and the level of activity in each area of an office. When unnecessary heating or cooling is detected, indoor units are individually controlled to match office conditions for energy saving operation.

Detection of the level of activity enables precise power saving.
Presence or absence of people at their desks and the level of activity in the office are detected in real time. Set temperature is automatically adjusted to optimise the lower power consumption.

Econavi sensor
CZ-CENSC1

Remote Econavi sensor allows optimum energy operation.
Pillars, walls, cabinets and other fittings obstruct the sensor, reducing the area of detection and lowering the energy saving effect. Taking into consideration blind spots, Panasonic enables the optimum layout for sensors in any office.

In the morning.
Thorough cooling when there is a high level of activity

In the afternoon.
Reduced cooling when there are fewer people

At night.
Automatic Thermo OFF depending on conditions at the end of the day

Controller for hotel application

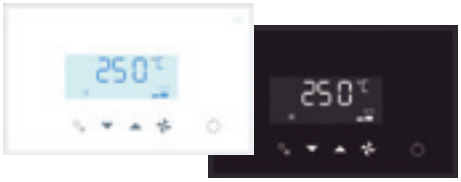

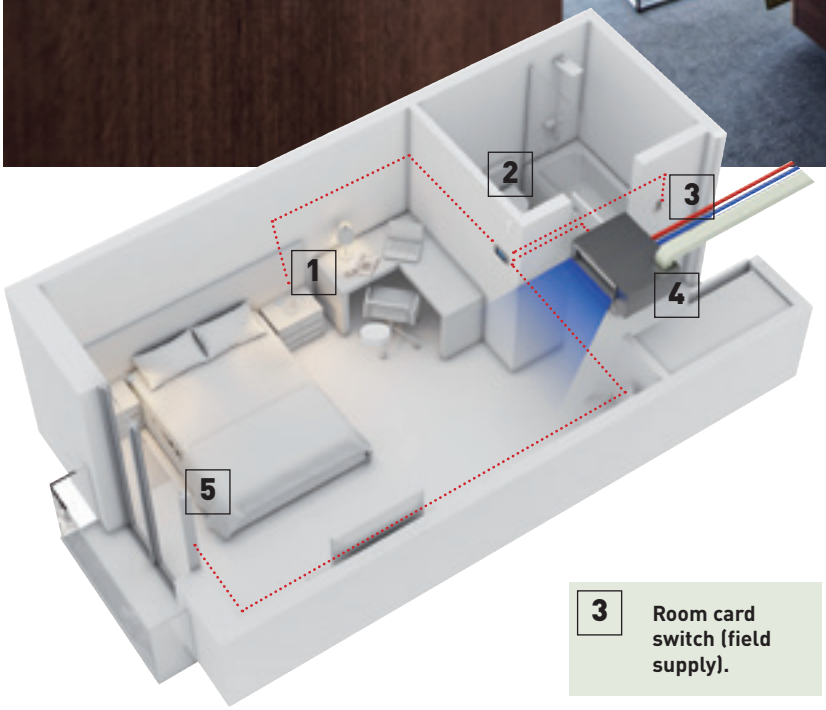

3 **Room card switch (field supply).**

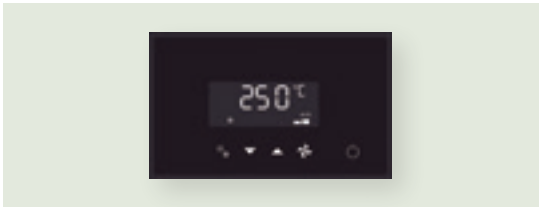

Controller to integrate all room hotel needs in one device.
Card switch. Heating and cooling control. Light control. Window control. Possible to connect to Modbus.

1

Lighting control.

2

Wall sensor PAW-WMS-AC (-DC).

4

Indoor unit. Variable static pressure hide away.

5

Window contact PAW-DWC.

Ceiling motion sensor PAW-CMS-AC (-DC).

Innovative line up of room controllers specially designed for hotel applications. With a modern cosmetic that match room interiors and simple operation for hotel guests.

- Easy to install
- Cost effective installation as all electrical cable are centralized on this remote: The lighting, card contact, motion detector, window contact and the air conditioning are controlled
- Architect inspired attractive design with 2 colors: black or white
- Stand alone and Modbus
- Bespoke finish as special order

Energy saving functions included on the device.
Turns OFF air conditioning and lighting when room is unoccupied. Disables air conditioning when window is open. Maximum/minimum setpoint temperature configurable.

Easy remote controller.
The hotel guest will have access to limited functions to control the air conditioning: ON/OFF, Temperature and Fan speed.

Easy set up.
Stand alone model with easy configuration menu to access all parameters. A pre-define scenario can be uploaded on the remote controller connected to a computer to make installation on site Plug & Play (only on the Modbus models).

New NFC fast set up.
With the new touch display control and touch room controller setting are quicker than ever. Just touching smartphone with NFC capability the settings will be saved. This function is also possible even when the control is not wired. Giving flexibility to save the setting even before installation.

Type	Model	Colors	Digital inputs	Digital output	BMS	Inst. set up	T. sensor
Touch display controller	PAW-RE2D4-WH	White	2			NFC	Built-in
	PAW-RE2D4-BK	Black	2			NFC	Built-in
Touch room controller	PAW-RE2C4-MOD-WH	White	4	4	Modbus	NFC	Built-in
	PAW-RE2C4-MOD-BK	Black	4	4	Modbus	NFC	Built-in

Room controller: 4 digital inputs & 4 digital output

Room controller offers flexibility and easy installation thanks to 4 preconfigured options. This is available in Modbus type.
Modbus references: PAW-RE2C4-MOD-WH, PAW-RE2C4-MOD-BK.

Wiring configuration example for option 2 in Modbus type.

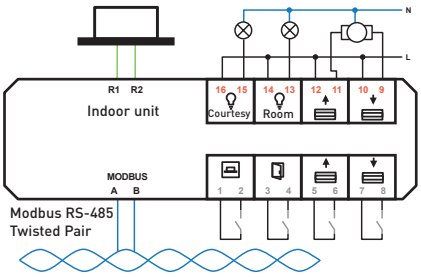

Configurations	4 options available I/O configurations: Inputs				Available I/O Configurations: Outputs			
	Digital	Digital	Digital	Analog	Relay	Relay	Relay	Relay
	1-2	3-4	5-6	7-8	15-16	13-14	11-12	9-10
Option 1	Card	Window	Lighting	Temperature	Courtesy	Lighting	Not used	Valve actuator
Option 2	Card	Window	Blinds up	Blinds down	Courtesy	Lighting	Blinds up	Blinds down
Option 3	Motion sensor	Window	Door contact	Temperature	Courtesy	Lighting	Not used	Valve actuator
Option 4	Lighting	Window	Blinds up	Blinds down	Not used	Lighting	Blinds up	Blinds down

Display: 2 digital inputs

Display control allows to handle 2 inputs to perform most common operation in room hotels.
References: PAW-RE2D4-WH, PAW-RE2D4-BK.

Wiring example for display controller.

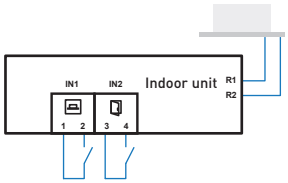

Configurations	3 options available: Inputs	
	IN1 (1-2)	IN2 (3-4)
Option 1	Card	Window
Option 2	Motion sensor	Window
Option 3	Motion sensor	Door contact

Hotel room controller	
PAW-RE2C4-MOD-WH	Modbus RS-485 touch room controller with I/O, white
PAW-RE2C4-MOD-BK	Modbus RS-485 touch room controller with I/O, black
PAW-RE2D4-WH	Touch display control with 2 digital inputs, white
PAW-RE2D4-BK	Touch display control with 2 digital inputs, black

Accessories sensors	
PAW-WMS-DC	Wall silent motion sensor 24 V
PAW-WMS-AC	Wall silent motion sensor 240 V AC
PAW-CMS-DC	Ceiling silent motion sensor 24 V
PAW-CMS-AC	Ceiling silent motion sensor 240 V AC
PAW-24DC	Power supply 24 V
PAW-DWC	Door or window contact

BMS interface with P-Link

BMS interface with Panasonic communication bus helps you to get significant savings.
In addition to reducing the time of configuration and installation, the potential mistakes can be avoided.
Easy to use and reliable interfaces for a straightforward integration.

KNX
Modbus®
BACnet™

1 Direct connection to P-Communication bus

- No need for additional gateway (CZ-CFUNC2)
- Significant 50 % cost saving for BMS interface*
- Avoid mistakes and reduce configuration time.

* In the case of PAW-AC2-BAC-16P by Panasonic calculation.

2 Upgraded specifications and easy configuration

- Base PCB board with MCU, Ethernet, RS485, RS232 & USB
- Configuration by IP or USB
- New single configuration tool for all models (IntesisBox MAPS)
- Modular expansion PCBs (KNX, RS485, DALI, MBUS, LON, ANYBUS)

3 BTL certified for BACnet

- BACnet: Version 14 and BTL certified

Direct connection to P-Communication bus

The interface can provide faster, cheaper, easier solution in your projects!

Conventional interface.

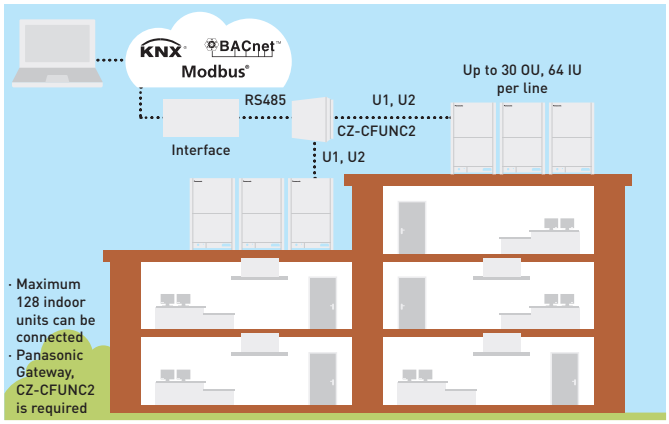

Interface with P-communication bus.

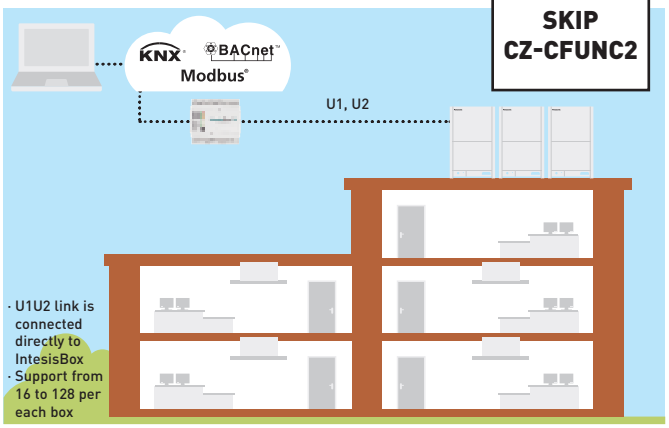

Upgraded specifications and easy configuration

- Base PCB board with MCU, Ethernet, RS485, RS232 and USB
- Modular expansion PCBs (KNX, RS485, DALI, MBUS, LON, ANYBUS)
- Frontal PCB with all LEDs, buttons and USB console port
- New single configuration tool for all models (IntesisBox MAPS)
- Improved version of the current communication stacks, BTL and KNX Certifications will be possible
- Recoverey of current configuration project working in V6
- Local logging of interface data via USB without the need for a PC
- Configuration by IP or USB (old generation RS232)
- CB certification for EU, US, CA and AU. Also UL marked product

Model for BACnet	Maximum number of indoor units connected
PAW-AC2-BAC-16P	16 indoor units
PAW-AC2-BAC-64P	64 indoor units
PAW-AC2-BAC-128P	128 indoor units
Model for Modbus	**Maximum number of indoor units connected**
PAW-AC2-MBS-16P	16 indoor units
PAW-AC2-MBS-64P	64 indoor units
PAW-AC2-MBS-128P	128 indoor units
Model for KNX	**Maximum number of indoor units connected**
PAW-AC2-KNX-16P	16 indoor units
PAW-AC2-KNX-64P	64 indoor units

Version	Connectable indoor units	Connectable outdoor units	Nr. of P- Communication bus port
16	1-16	1-16	1
64	1-64	1-30	1
128	128 (1-64 / P- Communication bus port)	60 (1-30 / P- Communication bus port)	2

Control and Connectivity

Centralized control systems

BMS system. PC base.

CZ-CSWKC2
P-AIMS. Basic software.
Up to 1024 groups. Controls 1024 units.

Connection with 3rd party controller.

CZ-CAPDC2
Seri-Para I/O unit for outdoor unit.
Up to 4 outdoor units.

CZ-CAPC3
ON/OFF control for external devices such as ERV.
Controls 1 unit.

CZ-CAPBC2
Mini Seri-Para I/O Unit
0 - 10 V.
Controls 1 indoor unit or a group of 8 indoor units.

CZ-CFUNC2
Communication adaptor.
Up to 128 groups.
Controls 128 units.

AC Smart Cloud.

CZ-CFUSCC1
Cloud internet control.
Up to 128 groups. Controls 128 units.

Domestic integration to P-Link - CZ-CAPRA1

Can connect RAC range to P-Link. Full control is now possible.

Integrates any unit in big system control.

- TKEA / PKEA server room integration
- Small offices with domestic indoors
- Tender for refurbishment (old system domestic and VRF in one installation)

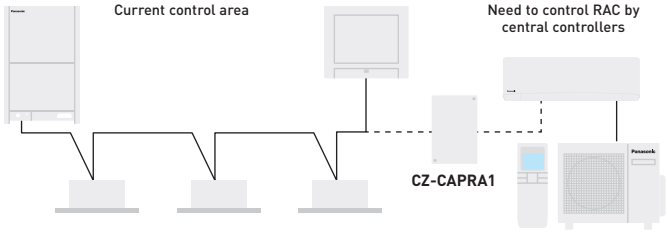

Current system for PACi / VRF. Central controller can connect to P-Link line to control units directly.

RAC units cannot connect directly to P-Link to be managed by central controllers.

It's necessary to have interface between P-Link and RAC protocol to cover basic operating items.

Basic operation items: ON/OFF, Mode select, Temperature setting, Fan speed, Flap setting, Remote control prohibit.
External input: ON/OFF control signal, abnormal stop signal.
External output for Relay [1]**:** Operation status (ON/OFF), alarm status output.

1) Because current CN-CNT connector can not provide the power for external output relay, additional Input power for external relay is necessary.

Easy connection to KNX, Modbus, LonWorks and BACnet

Great flexibility for integration into your KNX / Modbus / LonWorks / BACnet projects allows fully bi-directional monitoring and control of all the functioning parameters.

For more information, contact Panasonic.

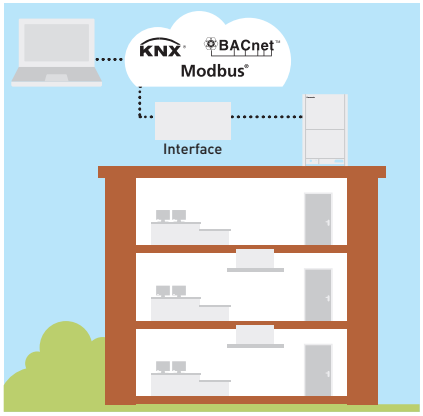

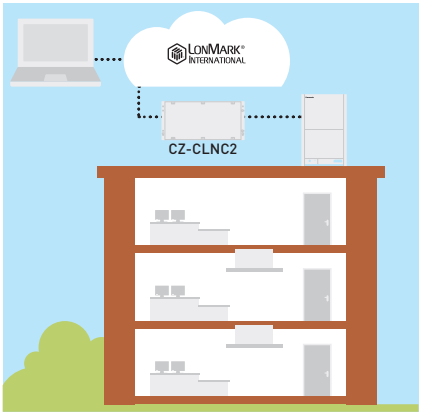

			Econavi control	Built-in thermostat	Indoor units which can be controlled	Use limitations	Function ON/OFF	Mode setting	Fan speed setting	Temperature setting	Air flow direction	Permit/Prohibit switching	Weekly program	BMS protocol
Individual controllers														
Touch room controller for hotel with Dry Contacts		**PAW-RE2C4-MOD-WH** **PAW-RE2C4-MOD-BK** WH: White, BK: Black. Bespoke finish available on request.	—	✔	1 indoor unit	—	✔	✔	✔	✔	—	✔	—	Modbus + 4 digital I/O signals
Touch display control for hotel with Dry Contacts		**PAW-RE2D4-WH** **PAW-RE2D4-BK** WH: White, BK: Black. Bespoke finish available on request.	—	✔	1 indoor unit	—	✔	✔	✔	✔	—	✔	—	Stand alone + 2 digital inputs
Design wired remote controller		**CZ-RTC5B**	✔	✔	1 group, 8 units	· Up to 2 controllers can be connected per group	✔	✔	✔	✔	✔	—	✔	—
Wired remote controller		**CZ-RTC6** Non-wireless	✔	✔	1 group, 8 units	· Up to 2 controllers can be connected per group	✔	✔	✔	✔	✔	—	—	—
		CZ-RTC6BL With Bluetooth®	✔	✔	1 group, 8 units	· Up to 1 controller can be connected per group	✔	✔	✔	✔	✔	—	✔	—
		CZ-RTC6BLW With WLAN & Bluetooth® (available from Autumn 2020)	✔	✔	1 group, 8 units	· Up to 1 controller can be connected per group	✔	✔	✔	✔	✔	—	✔	—
Wired remote controller		**CZ-RTC2** For Floor-standing (MP1) indoor units	—	✔	1 group, 8 units	· Up to 2 controllers can be connected per group	✔	✔	✔	✔	✔	—	✔	—
Infrared remote controller		**CZ-RWS3 + CZ-RWRU3W** **CZ-RWS3** **CZ-RWS3 + CZ-RWRL3** **CZ-RWS3 + CZ-RWRD3** **CZ-RWS3 + CZ-RWRT3** **CZ-RWS3 + CZ-RWRC3**	✔	—	1 group, 8 units	· Up to 2 controllers can be connected per group	✔	✔	✔	✔	✔ [1]	—	—	—
Centralized controllers														
Central controller with weekly timer		**CZ-64ESMC3**	✔	—	64 groups, maximum 64 units	· Up to 10 controllers, can be connected to one system · Main unit/sub unit (1 main unit + 1 sub unit) connection is possible · Use without remote controller is possible	✔	✔	✔	✔	✔ [1]	✔	✔	—
Only ON/OFF operation from central station. ON/OFF controller		**CZ-ANC3**	—	—	16 groups, maximum 64 units	· Up to 8 controllers (4 main units + 4 sub units) can be connected to one system · Use without remote controller is impossible	✔	—	—	—	—	✔	—	—
Intelligent controller (touch screen panel)		**CZ-256ESMC3**	✔	—	Main unit: 128. Up to 256 units can be expanded	· Communication adaptor CZ-CFUNC2 is necessary for connection with more than 128 units	✔	✔	✔	✔	✔ [1]	✔	✔	—

1. Setting is not possible when a remote controller unit is present (use the remote controller for setting). * All specifications subject to change without notice.

Individual controllers

Room controller for hotel rooms

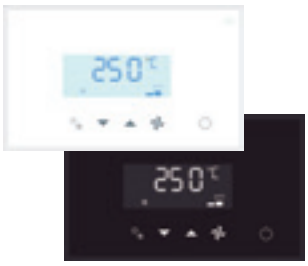

PAW-RE2C4-M0D-WH // PAW-RE2C4-M0D-BK
· Easy to install
· Cost effective installation as all electrical cables are centralised on this remote
· Architect inspired attractive design
· Direct connection to the Indoor unit with all primary functions of indoor unit available
· 2 options available: Stand alone and Modbus communication
· Colours: WH: White. BK: Black
· Room controller: 4 digital inputs and 4 digital outputs

From this remote controller.
The lighting, card contact, motion detector, window contact and the air conditioning are controlled.

Energy saving functions included on the device.
· Turns OFF air conditioning and lighting when room is unoccupied
· Disables air conditioning when window is open
· Maximum/minimum setpoint temperature configurable

Fast and simple set up.
Set up is simple and easy for room controllers. But it is extremely easy and quick with touch models, which can be set up by using smartphone with NFC technology, even when control is not yet installed / powered.

Display control for hotel rooms

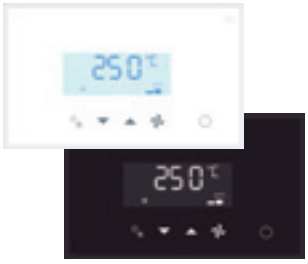

PAW-RE2D4-WH // PAW-RE2D4-BK
· Easy to install
· Cost effective installation as all electrical cables are centralised on this remote
· Architect inspired attractive design
· Direct connection to the Indoor unit with all primary functions of indoor unit available
· Stand alone communication
· Colours: WH: White. BK: Black
· Basic hotel function: 2 digital inputs

From this remote controller.
The card contact, motion detector, window contact and the air conditioning are controlled.

Energy saving functions included on the device.
· Disables air conditioning when window is open
· Maximum/minimum setpoint temperature configurable

Fast and simple set up.
Set up with smartphone with NFC technology, even when control is not yet installed/powered.

New wired remote controller

NEW 2020

nanoe™ X
ECONAVI

CZ-RTC6 // CZ-RTC6BL // CZ-RTC6BLW [1]
· 3 line-up. CZ-RTC6: Non-wireless, CZ-RTC6BL: Bluetooth®, CZ-RTC6BL: WLAN & Bluetooth®
· Intuitive control with stylish design profile
· Clean face with full flat & black LCD display
· Dimension (H x W x D): 86 x 86 x 25 mm

Panasonic H&C Control App [2].
· Daily remote control operation via Bluetooth®
· Quick and easy App set-up for system setting

Panasonic H&C Diagnosis App [3].
· Easy access to service parameters and service checker data via Bluetooth®

Basic operation.
· Mode setting: Heat / Cool / Dry / Fan / Auto
· Temperature setting
· Fan speed: 5 levels
· Air flow direction
· nanoe™ X & Econavi setting
· Weekly program [4]

1) Available from Autumn 2020, compatible with new PACi NX Series.
2) CZ-RTC6BL or CZ-RTC6BLW required.
3) A service checker interface is required and available from Autumn 2020. Compatible with new PACi NX Series.
4) Can be set from Panasonic H&C Control App.

Design wired remote controller

datanavi
nanoeX
ECONAVI

CZ-RTC5B
· Power consumption monitor (only for PACi)
· Flat face design & touch sensor switch for stylish design and operating usability
· New functions such as for energy saving & monitoring and for service use are available on the full dot LCD (3,5" display)
· Improved illumination
· White LED backlit
· Blink when alarm occurs

Datanavi
· Scan & save AC system info
· Easy access to manual database
· Commissioning, F-Gas check data history

* Panasonic App is required on your smartphone.

Basic Operation.
· Operation
· Mode
· Temperature setting
· Air flow volume
· Air flow direction

Timer function.
· Outing function
· Weekly program timer
· Easy ON/OFF timer
· Time display

Energy saving.
· Outing function
· Temperature setting range limitation
· Temperature auto return
· OFF remind
· Schedule demand control
· Energy saving mode
· Energy monitoring

Others.
· Key lock
· Ventilation fan control
· Display contrast adjustment
· Remote controller sensor
· Quiet operation mode
· Prohibit setting control from central controller
· Rotation / backup control

* Power consumption monitoring is available for all PACi systems except R410A PACi Standard.
* Rotation and backup control with CZ-RTC5B is available for all PACi systems.

Wired remote controller

CZ-RTC2 (for Floor standing (P1) indoor units)
· Time function 24 hours real time clock (week day indicator)
· Weekly programme function (a maximum of 6 actions can be programmed for each day)
· Sleeping function (this function controls the room temperature for comfortable sleeping)
· Maximum 8 indoor units can be controlled from one remote controller
· Remote controller by main remote controller and sub controller is possible (maximum 2 remote controllers (main remote controller and sub controller) can be installed for one indoor unit)
· Possible to connect to the outdoor unit using PAW-MRC cable for servicing purposes
· Outing function (this function can prevent the room temperature from dropping or rising when the occupants are out for a long time)

Basic remote controller ON/OFF.
· Operation mode changeover (Cooling, Heating, Dry, Auto, Fan)
· Temperature setting (Cooling / Dry: 18 ~ 30 °C Heating: 16 ~ 30 °C)
· Fan speed setting High / Medium / Low and Auto
· Air flow direction adjustment
· Dimensions (H x W x D): 120 x 120 x 16 mm

Individual controllers

Infrared remote controller

CZ-RWS3 + CZ-RWRU3W // CZ-RWS3 // CZ-RWS3 + CZ-RWRL3 // CZ-RWS3 + CZ-RWRD3 // CZ-RWS3 + CZ-RWRT3 // CZ-RWS3 + CZ-RWRC3

- Easy installation for the 4 Way Cassette type simply by replacing the corner part
- 24 hour timer function
- Remote controller by main remote controller and sub controller is possible (Max. 2 remote controllers (main remote controller and sub controller) can be installed for one indoor unit)
- When CZ-RWS3 is used, infrared control becomes possible for all indoor units (1: when a separate receiver is set up in a different room, control from that room also becomes possible. 2: automatic operation by means of the emergency operation button is possible even when the remote controller has been lost or the batteries have been exhausted)
- Operation of separate energy recovery ventilators (when commercial ventilation fans or heat-exchange ventilation fans have been installed, they can be operated with this remote controller (interlocked operation with the indoor unit or independent ventilation ON/OFF)

CZ-RWS3 + CZ-RWRU3W
For 4 Way 90x90 Cassette.

CZ-RWS3
For Wall Mounted and 4 Way 60x60 (with a panel) and Floor Console.

CZ-RWS3 + CZ-RWRL3
For 2 Way Cassette.

CZ-RWS3 + CZ-RWRD3
For 1 Way Cassette.

CZ-RWS3 + CZ-RWRT3
For Ceiling.

CZ-RWS3 + CZ-RWRC3
For all indoor units.

Remote sensor

CZ-CSRC3

- This remote sensor can be connected to any PACi or VRF unit. Use it to detect the room temperature when no remote controller sensor or body sensor is used (connection to a system without a remote controller is possible)
- For joint use with a remote controller switch, use the remote controller switch as main remote controller
- Batch group control for up to 8 indoor units
- Appearance design based on simplified remote controller chassis
- Dimensions (H x W x D): 120 x 70 x 17 mm
- Weight: 70 g
- Temperature/Humidity range: 0 °C to 40 °C / 20 % to 80 % (no condensation) (indoor use only)
- Power source: 16 V DC (supplied from indoor unit)
- Maximum number of connectable indoor units: Up to 8 units

Control contents		Part name, model No.	Quantity
Standard control	· Control of the various operations of the indoor unit by wired or infrared remote controller · Cooling or heating mode of the outdoor unit is decided by the first priority of the remote controller · Switching between remote controller sensor and body sensor is possible	High spec wired remote controller: CZ-RTC5B Infrared remote controller: CZ-RWS3 + CZ-RWRU3W // CZ-RWS3 + CZ-RWRL3 // CZ-RWS3	1 unit each
(1) Group control	· Batch remote controller on all indoor units · Operation of all indoor cells in the same mode · Up to 8 units can be connected	High spec wired remote controller: CZ-RTC5B Infrared remote controller: CZ-RWS3 + CZ-RWRU3W // CZ-RWS3 + CZ-RWRL3 // CZ-RWS3	1 unit
(2) Main/ sub remote controller	· Maximum 2 remote controllers per indoor unit · The button pressed last has priority · Timer setting is possible even with the sub remote controller	Main or sub.: High spec wired remote controller: CZ-RTC5B Infrared remote controller: CZ-RWS3 + CZ-RWRU3W // CZ-RWS3 + CZ-RWRL3 // CZ-RWS3	As required

Centralised controllers

System controller with schedule timer

ECONAVI

Sample display image / Operation status display

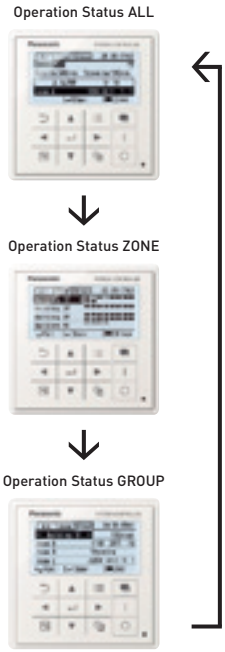

CZ-64ESMC3
Operation with various functions from central station.
Panasonic unveils state-of-the-art digital controller.
Panasonic's innovative and easy to use interface that offers full functionality with an integrated schedule timer and system controller, making managing heating and cooling systems easier than ever before. The CZ-64ESMC3 includes Panasonic's popular schedule timer, which gives users full flexibility over when they want their property heated or cooled. Users can adjust the system for holidays, pausing operations for long periods of time so that energy isn't wasted heating or cooling an empty home or office. The controller also allows six operations per day to be programmed.

Mix of current 2 controllers: System controller + schedule timer.
System controller will be designed by taking priority on these 2 operations with following technical key points:
· Same operation feeling as wired remote controller by touch-key panel
· High visibility and usability by full-dot LCD
· Based on high wired remote controller
· Maximum 64 group of indoor units, individual control for 64 units
· 4 zone control; 1 zone = maximum 16 groups
· Several energy saving function (based on CZ-RTC5B)
· 6 timer program per day for 1 week (7 days) operation (total 6 x 7= 42 programs)
· Basic setting items (Temperature, Mode, Fan speed, Flap position) can be set by same manner as CZ-RTC5B

Function list:
Central control functions:
· Central control / individual setting
  - Start-stop prohibition for remote controller
  - Start-stop / Mode change / Temperature setting prohibition for remote controller
  - Mode change / Temperature setting prohibition for remote controller
  - Mode change prohibition for remote controller
  - Select items for prohibition
· Filter information
  - Filter sign
  - Filter sign reset
· Ventilation setting

Timer functions and external I/O:
· Weekly timer
  - Timer setting enable / disable
  - Copy of timer setting
· Maintenance
  - External signal (Start / Stop) (Demand control)
  - Centralized control master-slave setting
  - Alarm history
· Initial setting
  - Clock

Energy saving, maintenance and operating functions:
· Energy saving control
  - Econavi ON/OFF
· Filter information
  - Filter sign and hour counter display
· Maintenance
  - Service contact
· Initial setting
  - Clock display setting
  - Name Setting
  - Operation lock setting
  - Operation sound setting
  - LCD contrast setting
  - LCD backlight setting
  - Select displayed language (EN/FR/IT/ES/DE)
  - Administrator password
· Setting information list

ON/OFF controller

CZ-ANC3
Only ON/OFF operation from central station.
· 16 groups of indoor units can be controlled
· Collective control and individual group (unit) control can also be performed
· Up to 8 ON/OFF controller (4 main, 4 sub) can be installed in one link system
· The operation status can be determined immediately
· Dimensions (H x W x D): 121 x 122 x 14 + 52 mm (embedding dimension)

Power supply: 220 to 240 V AC.
I/O part: Remote input (effective voltage: within 24 V DC): All ON/OFF.
Remote output (allowable voltage: within 30 V DC): ON, Alarm.

Note: As operation mode and temperature settings are not possible with the ON/OFF controller, it must be used together with a remote controller, a system controller etc.

Centralised controllers

Intelligent controller (touch screen panel)

ECONAVI

CZ-256ESMC3
Simplified load distribution ratio (LDR) for each tenant.
Dimensions (H x W x D): 240 x 280 x 20 (+60) mm.
Power supply: Single Phase 100-240 V ~ 50/60 Hz.
Maximum number of connectable indoor units: 256 units (maximum per link: 64 units).
Maximum number of connectable outdoor units: 120 units (maximum per link: 30 units).
· Central control device: Up to 10 units
Enlarged display screen: 10,4 inch touch-panel colour LCD. Pursuing visibility, ease of use.
Retrieve data from USB memory: Place the USB port inside the panel (USB memory available in stores). Communication adaptor: CZ-CFUNC2*.

* CZ-CFUNC2 is required to connect more than 128 indoor units.

Functions:
· Graph display (trends, comparisons)
· Econavi ON/OFF
· Outdoor unit quiet operation ON/OFF
· Energy saving functions: Set temperature auto return settings, Auto shut OFF, Set temperature range limit settings, Energy saving for PAC current value,etc.
· Event control (such as equipment linkage)
· Performs closing at end of any period

Operation and status.
You can check to operational status (ON/OFF, operating mode, alarms, etc.) of all indoor units and outdoor units in real time.
You can also select indoor units to change their settings.

Operation scheduling.
You can register daily operation schedules (ON/OFF time, operating modes, set temperatures, etc.) for individual indoor units or groups of indoor units.
Operations can be schedule for up to 2 years in advance.

Load distribution calculation for each tenant.
· Air-conditioner load distribution ratio is calculated for each unit (tenant) with used energy consumption data (m^3, kWh)
· Calculated data is stored as a CSV type file
· Data from the last 365 days is stored

Web application. Web access & control from remote station.
· Accessing from remote PC
· You can monitor/operate system by using web browser

Remote controller.
The LAN terminal on this unit enables you connect it to a network. Connecting to Internet will enable you to operate the unit and check the status using a PC from a remote location*.

* Remote access rights and additional IT infrastructure / programming may be required.

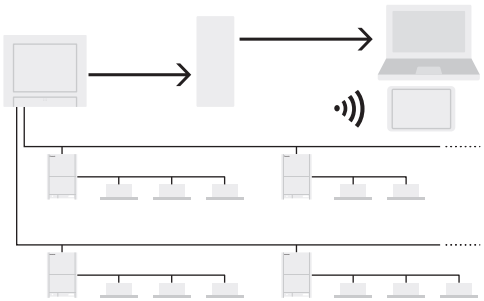

Backup tool to save your commissioning time.
Various data such as distribution, setting, log history etc. can be saved by CSV file.
Setting data of CSV file is available to edit and import to the controller again.
You can save time for commissioning and change setting flexibly and easily by your PC.
· Customize data
· Data recovery
Data can be imported again by general USB.

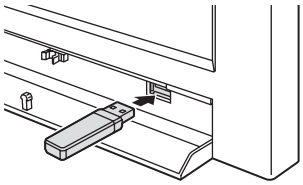

System configuration example.

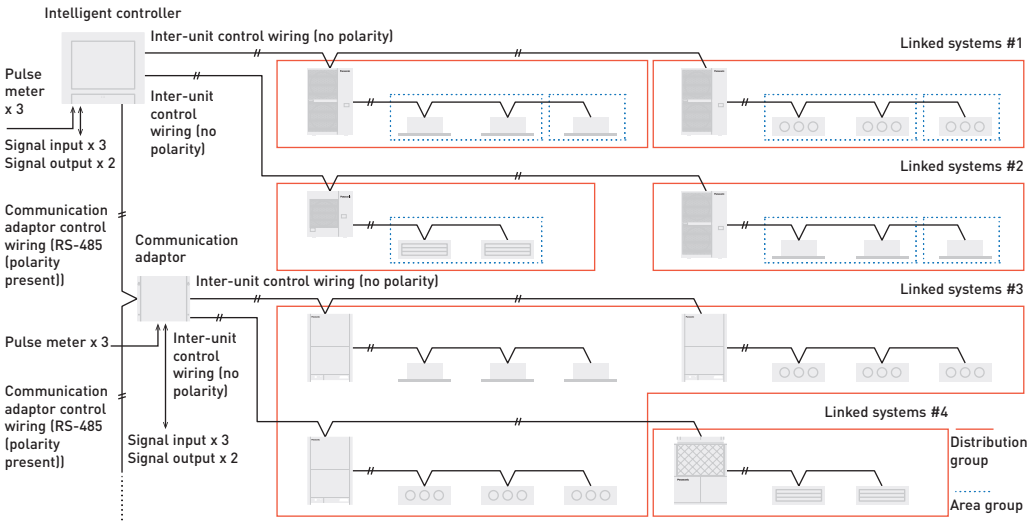

P-AIMS. Panasonic Total Air conditioning Management System

CZ-CSWKC2 / P-AIMS Basic software.
Up to 1024 indoor units can be controlled by one PC.

Functions of basic software.
· Standard remote controller for all indoor units.
· Many timer schedule programs can be set on the calender.
· Detailed information display for alarms.
· CSV file output with alarm history, operating status.
· Automatic data backup to HDD.

P-AIMS is suitable for large shopping centers and universities with many areas/ buildings. 1 "P-AIMS" PC can have 4 independent systems at once.
Each system can have maximum 8 C/A units, and control maximum 512 units. In total, 1024 indoor units can be controlled by 1 "P-AIMS" PC.

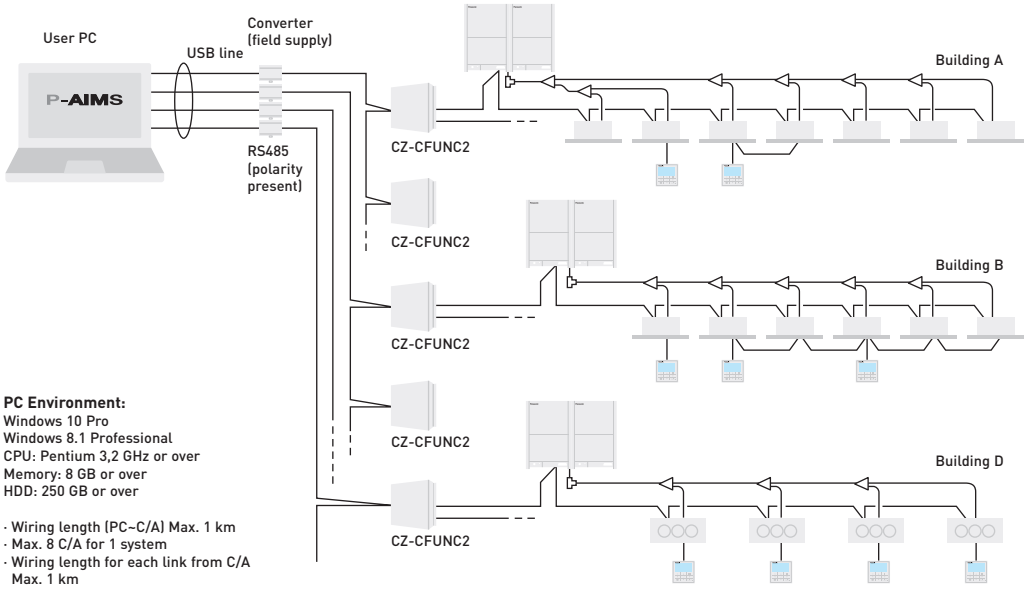

PC Environment:
Windows 10 Pro
Windows 8.1 Professional
CPU: Pentium 3,2 GHz or over
Memory: 8 GB or over
HDD: 250 GB or over

· Wiring length (PC–C/A) Max. 1 km
· Max. 8 C/A for 1 system
· Wiring length for each link from C/A Max. 1 km

P-AIMS optional software CZ-CSWAC2 for load distribution. Load distribution calculation for each tenant.
· Air-conditioner load distribution ratio is calculated for each unit (tenant) with used energy consumption data (m^3, kWh)
· Calculated data is stored as a CSV type file
· Data from the last 365 days is stored

P-AIMS optional software CZ-CSWWC2 for web application.
Web access & control from remote station.
· Accessing P-AIMS software from remote PC
· You can monitor/operate ECOi System by using web browser (Internet Explorer)

P-AIMS optional software CZ-CSWGC2 for object layout display. Whole system can be controlled visually.
· Operating status monitor is available on the layout display
· Object's layout and indoor unit's location can be checked at once
· Each unit can be controlled by virtual remote controller on the display
· Max. 4 layout screens are shown at once

P-AIMS optional software CZ-CSWBC2 for BACnet software interface. Connectable to BMS system.
· Can communicate with other equipment by BACnet protocol
· ECOi System can be controlled by both BMS and P-AIMS
· Maximum 255 indoor units can be connected to 1 PC (that has P-AIMS basic & BACnet software).

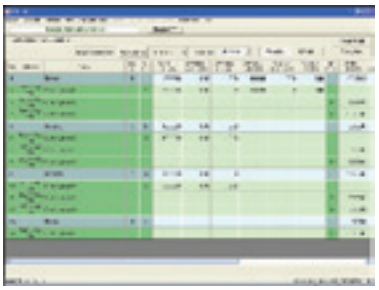

With 4 upgrade packages the basic software can be upgraded to suit individual requirements.

Centralised controllers

Seri-Para I/O unit for outdoor unit

CZ-CAPDC2 for ECOi / CZ-CAPDC3 for Mini ECOi and PACi.
Connection with 3rd party controller.
· This unit can control up to 4 outdoor units
· From the central control device, mode changing and batch operation/batch stop are possible
· Required for demand control

Dimensions (H x W x D): 80 x 290 x 260 mm.
Power supply: Single phase 100/200 V (50/60 Hz), 18 W.

Input: Batch operation/Batch stop (non-voltage contact/24 V DC, pulse signal). Cooling/Heating (non-voltage contact/static signal). Demand 1/2 (non-voltage contact/static signal) (local stop by switching).
Output: Operation output (non-voltage contact). Alarm output (non-voltage contact).
Wiring length: Indoor/outdoor operation lines: Total length 1km. Digital signal: 100 m or shorter.

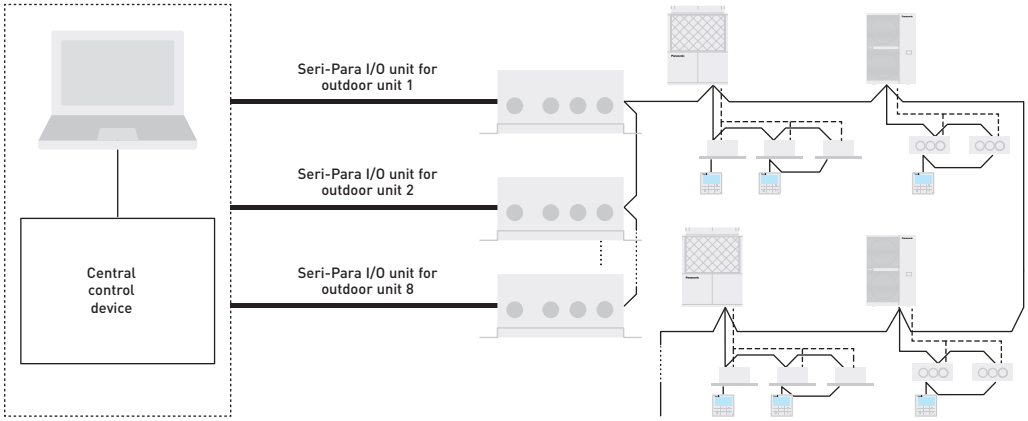

Local adaptor for ON/OFF control

CZ-CAPC3
Connection with 3rd party controller.
· Control and status monitoring is possible for individual indoor unit (or any external electrical device up to 250 V AC, 10 A) by contact signal

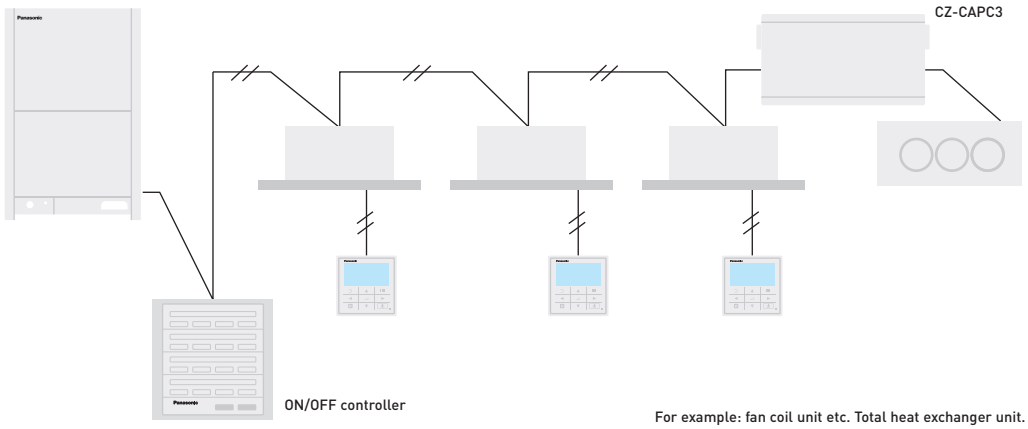

For example: fan coil unit etc. Total heat exchanger unit.

MINI Seri-Para I/O Unit 0 -10 V

CZ-CAPBC2

Connection with 3rd party controller.

- Control and status monitoring is possible for individual indoor unit (1 group)
- In addition to operation and stop, there is a digital input function for air speed and operation mode
- Temperature setting and measuring of the indoor suction temperature can be performed from central monitoring
- Power is supplied from the T10 terminal of the indoor units
- The analog input for demand of the outdoor capacity by 20 steps (from 40 % to 120 %) by 0-10 V
- The analog input for temperature setting is 0 to 10 V, or 0 to 140 Ohm
- Separate power supply also is possible (in case of suction temperature measuring)

* Ask to your distributor.

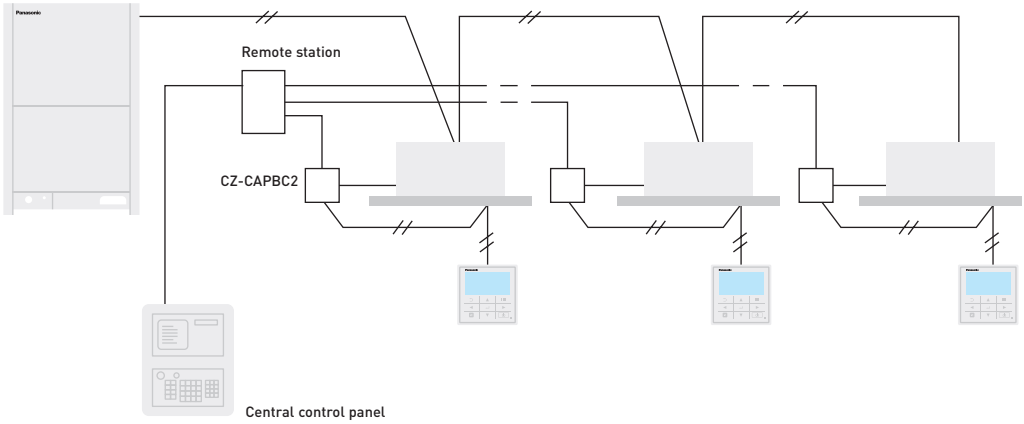

Communication adaptor for VRF connectivity

CZ-CFUNC2

This communication interface is required to connect a ECOi and GHP systems to a BMS. An additional interface is needed to convert the information into KNX / Modbus / BACnet language. CZ-CFUNC2 is very easy to operate and to connect to the Panasonic P-Link, which is the ECOi bus. From the CZ-CFUNC2, all the indoor and outdoor units of the installation can be easily control. Two linked wiring systems can be connected to one CZ-CFUNC2.
Dimensions (H x W x D): 260 x 200 x 68 mm

* As this is not a splash-proof design, it must be installed indoors or in the control panel, etc.

PACi and VRF control and connectivity

Controls and connectivities are the key to offer better comfort and price. Panasonic offers its customers cutting-edge technology, specially designed to ensure our air conditioning systems deliver optimal performance.

BMS CONNECTIVITY

PACi, ECOi and ECO G connectivity

The interface has been designed specifically for Panasonic and provides complete monitoring, control and full functionality of the line-up from IntesisHome, KNX, Modbus, BACnet and LonWorks installations.
This connectivity solution with "PAW" model names is made by a third party company, please contact Panasonic for more information.

	Room controller	Interface	BMS Type	Maximum number of indoor units connected
ECOi / PACi indoor units	SER8150R0B1194 / SER8150R5B1194		Modbus / BACnet	1 Unit/group
		PAW-RC2-KNX-1i	KNX	1 (1 Group of indoor units)
		PAW-RC2-MBS-1	Modbus RTU [1]	1 (1 Group of indoor units)
		PAW-RC2-MBS-4	Modbus	4 Indoor/groups
		PA-RC2-WIFI-1	IntesisHome	1 (1 Group of indoor units)
		PAW-RC2-BAC-1	BACnet	1
PACi / ECOi / ECO G P-Link		PAW-AC2-KNX-16P	KNX	16
		PAW-AC2-KNX-64P	KNX	64
		PAW-AC2-MBS-16P	Modbus	16
		PAW-AC2-MBS-64P	Modbus	64
		PAW-AC2-MBS-128P	Modbus	128
		PAW-TM-MBS-RTU-64	Modbus RTU [2]	64
		PAW-TM-MBS-TCP-128	Modbus TCP [2]	128
		PAW-AC2-BAC-16P	BACnet	16
		PAW-AC2-BAC-64P	BACnet	64
		PAW-AC2-BAC-128P	BACnet	128
		CZ-CLNC2	LonWorks	16 Groups of maximum 8 indoor units, in total maximum 64 indoor units

1) Interface Modbus RTU/TCP is needed in case if Modbus TCP connection. PAW-MBS-TCP2RTU (ModBus RTU Slave devices). 2) Interface CZ-CFUNC2 needed.

Airzone. Control of the Hide Aways

Airzone has developed interfaces to easily connect to Panasonic Commercial Hide Away units. Ensuring optimum performance, comfort and energy savings, the new system is efficient and easy to install.

Airzone full range of accessories for any duct project.

Different type of outlets

Also plenum automatic doors

Full range of remote controls (wired / Infrared, ...)

AIRZONE

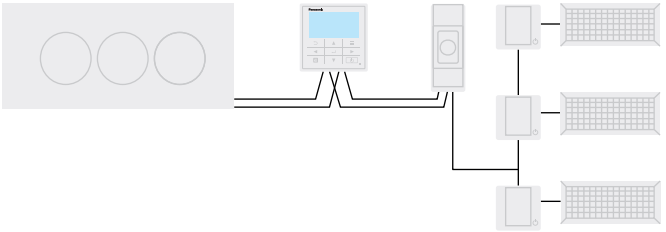

ECOi, ECO G and PACi connectivity indoor units

PCB's and cables for ECOi, ECO G and PACi indoor units.

Name of the cables	Function	Comment
CZ-T10	All T10 functions	Requires field supplied accessory
PAW-FDC	Operate external fan	Requires field supplied accessory
PAW-OCT	All option monitoring signals	Requires field supplied accessory
CZ-CAPE2	3-Pipe control PCB	Requires additional wires from spare part supply
PAW-EXCT	Forced Thermo OFF/Leakage D.	Requires field supplied accessory

Name of the PBC	Function	Comment
PAW-T10	All T10 functions	Allows easy connection "Plug & Play"
PAW-PACR3	Redundancy of 2 or 3 systems; for ECOi and PACi	Redundancy of 2 or 3 ECOi or PACi systems including temperature monitoring, error indication, backup, alternative run

T10 connector (CN061)

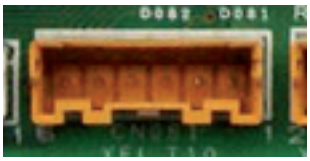

CZ-T10
Panasonic has developed an optional accessory (consisting of plug + wires) called CZ-T10 to enable an easy connection to this T10 connector.

Connecting an ECOi indoor unit to an external device is easy. The T10 terminal featured in the electronic circuit board of all indoor units enables digital connection to external devices.

T10 terminal Specification (T10: CN015 at indoor unit PCB).
· Control items: 1. Start/stop input
2. Remote controller prohibit input
3. Start signal output
4. Alarm signal output

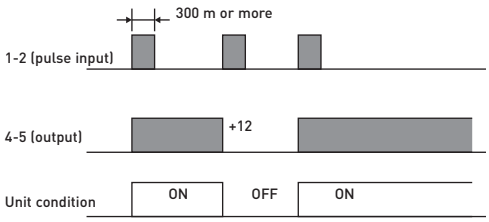

NOTE: The wire length from indoor unit to the relay must be within 2,0 m. Pulse signal changeable to static by cutting jumper JP001.

· Condition
1. 1-2 (Pulse input): Unit ON/OFF condition switching with a pulse signal. (1 pulse signal: shortage status more than 300 msec. or more)
2. 2-3 (Static input): Open / Operation with remote is permitted (Normal condition) Close / Remote controller is prohibited
3. 4-5 (Static output): 12 V output during the unit ON / No output at OFF
4. 5-6 (Static output): 12 V output when some errors occur / No output at normal

· Example of wiring

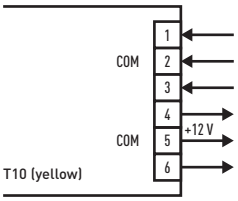

Usage example.
Forced OFF control.
Term 1 & 2: Free contact for ON/OFF signal (cut *JP1* for static signal) when the hotel card is it connected the contact must be close (the unit can be used).
Term 2 & 3: Free contact to prohibit all function in the remote controller install in the room when the hotel card is it removed the contact must be closed (the unit can not work).

Terminal = T10

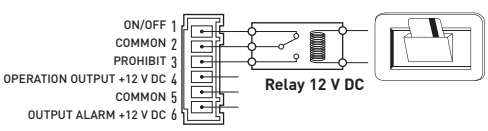

Operation ON/OFF signal output.
· Condition:
4-5 (Static output): 12 V output during the unit ON / No output at OFF
· Example of wiring

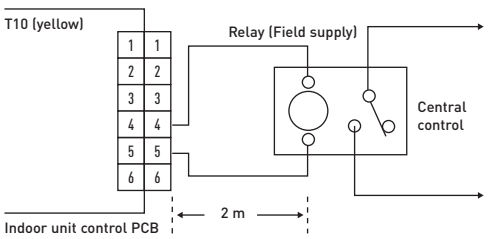

Note: The wire length from indoor unit to the Relay must be within 2,0 m. Pulse signal changeable to static by cutting jumper JP001.
* PACi-NX series is not compatible.

Fan drive connector (CN032)

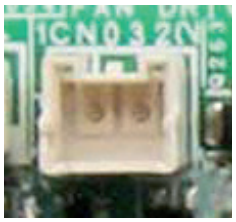

PAW-FDC
Panasonic has developed an optional accessory (consisting of plug + wires) called PAW-FDC to enable an easy connection to this fan drive connector (CN032).

Operating the ventilation fan from the remote controller
- Start / stop of external ventilation and total heat exchanger fans
- Works even if indoor unit is stopped
- In case of group control ➔ all fans will operate; no individual control

External fan ON/OFF

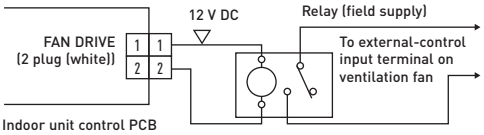

Option connector (CN060) output external signals

PAW-OCT
Panasonic has developed an optional accessory (consisting of plug + wires) called PAW-OCT to enable an easy connection to this Option Connector (CN060).

With the combination of the T10 and the option CN060 an external control of the indoor units is possible!

6P (white): Outputs external signals as shown in the figure below

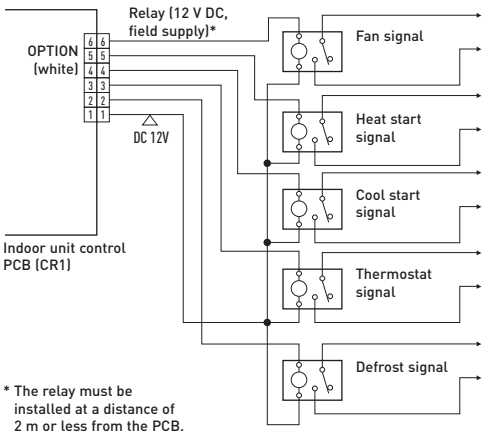

EXCT connector (CN009)

PAW-EXCT
Panasonic has developed an optional accessory (consisting of plug + wires) called PAW-EXCT to enable an easy connection to this EXCT Connector (CN009).

A) With static input.
➔ STATIC INPUT ➔ THERMO OFF ➔ ENERGY SAVING
2P plug (red): Can be used for demand control. When input is present, forces the unit to operate with the thermostat OFF.

Note: The length of the wiring from the indoor unit control PCB to the relay must be 2 m or less.

· Examples of wiring:

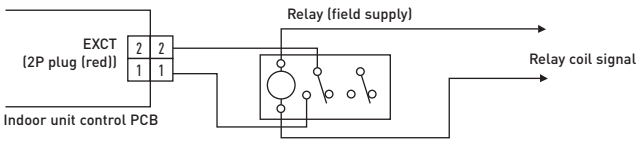

B) Example: In connection with a refrigerant sensor.
- Signal from leakage detector: non voltage, static.
- Indoor unit setting: Code 0b ➔ 1
- Connector for leak detector: EXCT
- Outdoor unit setting:
  Code C1 ➔ 1 power output if alarm from O2 connector 230 V
  Code C1 ➔ 2 power output if alarm from O2 connector 0 V
- Displayed alarm message P14

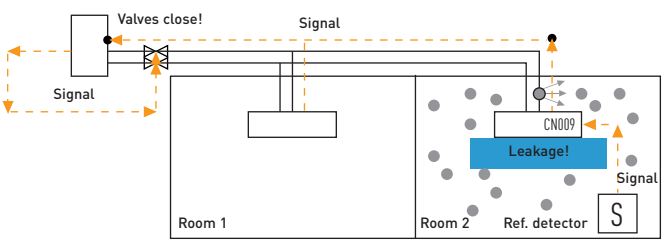

Panasonic
ECO i - W

Discover a new era of ECOi, the ECOi-W. Heat pump chillers

Panasonic introduces the new ECOi-W heat pump chiller series.
This new series provides a wide variety of HVAC system solutions, to meet all of your residential, commercial and industrial needs.

ECOi-W meets the customer's needs, with this fully customisable heat pump chiller

ECOi-W

Unrivaled reliability and quality.
Panasonic solutions can be enjoyed for years to come, even in the most extreme climates. Panasonic does not compromise on product quality, safety or durability, in order to provide the ultimate comfort when you need it most.

There is a reason to choose Panasonic as your partner.

Panasonic does not compromise on product quality, always strives for 100 % quality.
ECOi-W series offers smart technology meeting your needs at home and business.

Energy saving

HIGH SEER 4,04

High seasonal efficiency in cooling mode.
SEER follows COMMISSION REGULATION (EU) No 2016/2281.

HIGH SCOP 3,43

High seasonal efficiency in heating mode.
SCOP follows COMMISSION REGULATION (EU) No 813/2013.

High performance and comfortability

SUPER QUIET

Super quiet.
Extra quiet operation is available as standard (with sizes 20 – 40, 140 - 210).

BLUEFIN

Bluefin.
Bluefin coil comes as standard. The life time of coils have been extended thanks to the hydrophilic coating.

ULTIMATE CUSTOMISATION

Ultimate customisation.
Various pump, hydraulic, ambient options offered, plus many more.
Ultimate customization for your needs and environment.

AUTOMATIC FAN

Automatic fan operation.
The microprocessor control automatically adjusts the fan speed as a function of the operating conditions.

-17°C HEATING MODE

Down to -17 °C in heating mode.
The ECOi-W system works in heating mode at outdoor temperature down to -17 °C.

50°C COOLING MODE

Up to 50 °C in cooling mode.
The ECOi-W system works in cooling mode at outdoor temperature up to 50 °C.

DEFROST LIMITING

Defrost limiting cycle (140 – 210).
Each pair of coils can be defrosted wisely while the other pair of coils are running in heating mode.
This alternated defrost cycle ensures stable hot water even at low ambient conditions.

High connectivity

BMS CONNECTIVITY

BMS connectivity.
The communication port can be integrated into the ECOi-W system and provides easy connection and control.
Modbus RTU is equipped as standard. Modbus TCP/IP, BACnet IP and BACnet MSTP as optional availability.

Reliable quality

100% QUALITY
QUALITY CERTIFIED BY PANASONIC

Quality certified by Panasonic.
Panasonic does not compromise on product quality, safety, durability in order to provide the ultimate comfort when you need it most.

EUROVENT CERTIFIED PERFORMANCE www.eurovent-certification.com

Eurovent certified performance.
The performance of ECOi-W Series has been certified by Eurovent to prove the high quality and high performance by Panasonic.
https://www.eurovent-certification.com/

ErP

ECOi-W Series are compliant with ErP regulation.
SEER follows COMMISSION REGULATION (EU) No 2016/2281.
SCOP follows COMMISSION REGULATION (EU) No 813/2013.

Support materials for customers

AutoCAD 2D files and BIM models for ECOi-W full range is ready at Panasonic PROClub.
https://www.panasonicproclub.com

ECOi-W, the solution for hotels, offices and industry

ECOi-W provides the optimal performance in any climatic condition.

1 High energy saving and comfort
- High SEER/SCOP
- Quiet operation
- Integrate ECOi-W and VRF systems with BMS control

2 High flexibility
- From 20 kW to 210 kW
- Customisable design
- Operating range: -17 °C (heating) to 50 °C (cooling)
- Wide range of hydraulic options
- Wide range of communication protocols

3 High quality
- Defrost limiting coil design (140 to 210)
- Optimized design for service and maintenance
- Compact footprint

Operating conditions

Panasonic ECOi-W provides a wide operation range from -17 °C in heating to 50 °C in cooling.

Ambient temperature in cooling.

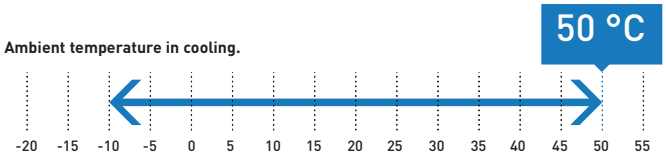

Ambient temperature in heating.

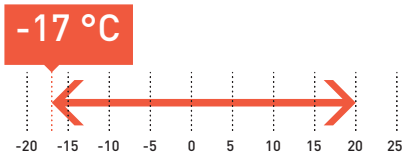

Cooling: Outside air temperature (°C (DB)). Heating: Outside air temperature (°C (WB)).

Water outlet temperature in cooling.
One of the uniquenesses which ECOi-W has, is the water outlet temperature down to -10 °C in cooling. It can ensure the operation temperature of the process equipment in factories.

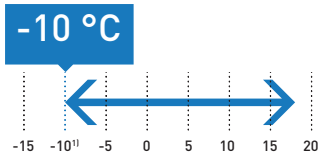

Water outlet temperature in heating.

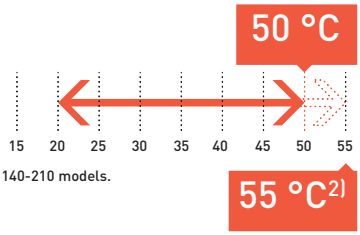

1) With glycol 45 %, 5 °C without glycol. 2) For 140-210 models.

ECOi-W line-up

ECOi-W Size	20	25	30	35	40	45	55	65	75	90	105	125	140	150	170	190	210
Cooling capacities (kW)	19,4	25,3	26,9	35,8	37,4	46,8	53,3	65,8	71,6	91,4	106,2	121,9	125,4	137,6	150,9	175,8	195,4
Heating capacities (kW)	19,5	26,9	29,7	37,3	41,6	48,5	58,2	67,2	75,9	88,1	101,0	119,1	143,7	153,7	170,1	194,9	217,6
SEER	3,9	3,9	3,9	3,7	3,9	3,7	3,9	4,0	4,0	3,9	3,9	3,9	3,9	3,9	3,9	3,7	3,7
SCOP	3,4	3,3	3,3	3,4	3,4	3,2	3,3	3,4	3,4	3,3	3,3	3,4	3,3	3,4	3,3	3,3	3,2
Energy efficiency class (Scale A+++ to D) [1]	A+	A+	A+	A+	A+	A+	A+	A+									
Dimensions (H x W x D) [2]	1983 x 1000 x 1000			1983 x 1000 x 1000		1986 x 2180 x 1160		1986 x 2180 x 1160		2286 x 2180 x 1160			2295 x 2856 x 2210		2321 x 2856 x 2210		

1) Seasonal space heating energy efficiency class according to scale from A+++ to D. 2) Without buffer tank.

Panasonic Certified Quality

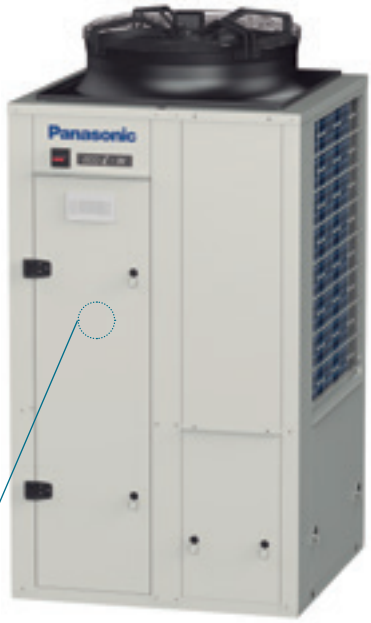

Class A pump

An efficient pump is equipped as a standard*. A wide range of single and double pump, plus pump drive option is available.

* Available in 20-40.

Axial AC/EC fan

The microprocessor control automatically adjusts the fan speed as a function of the operating conditions.

SWEP BP heat exchanger

Very compact & long durability of SWEP Braze Plate Heat Exchanger.
Unique design for the size 140 - 210 improving frost protection and efficiency.

Model type supplied may vary.

Simple user friendly control

In addition to basic control functions...
- Intelligent logic control for inlet water temperature
- Night setback operation to reduce electrical consumption and noise
- Automatic test operation at the push of a button

BMS integration

Modbus RTU as standard.
Modbus TCP/IP, BACnet IP and BACnet MSTP as optional availability.
Integrated systems with ECOi-W Chiller, VRF and BMS control can be offered.

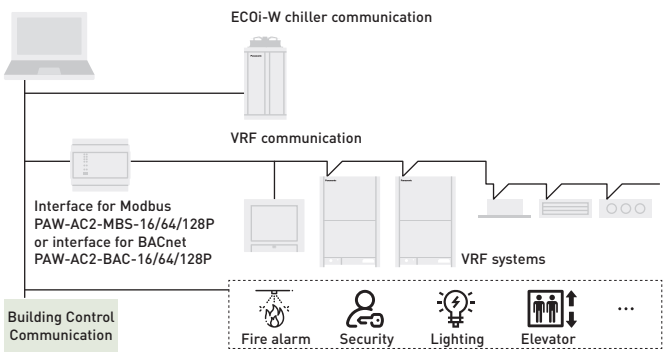

Panasonic does not compromise on product quality, safety or durability, in order to provide the ultimate comfort when you need it most.

Defrost limiting coil design

- Fin space increased to prevent the coil freezing
- Number of rows increased to maintain the same capacity in standard conditions
- Designed to decrease freezing frequency as soon as outdoor air temperature goes below 7 °C

* Available in 140-210.

Standard coil: 2 defrost cycles every 130 min.

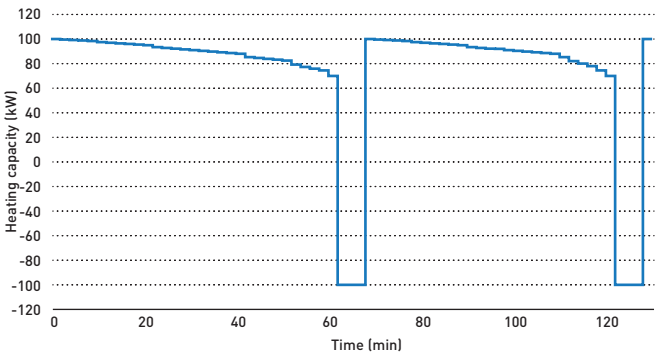

Special coil design: 1 defrost cycle every 130 min.

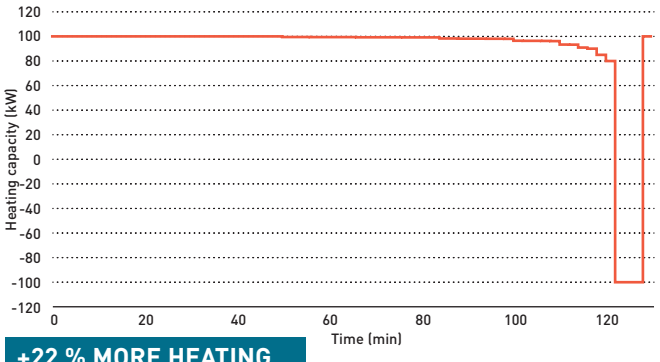

+22 % MORE HEATING
+15 % HIGHER COP
SCOP IMPROVED

Victaulic grooved connection

Victaulic Installation-Ready™ couplings assure proper piping installation. Optimized design to reduce installation effects, including noise and vibration attenuation.

* Available in 140-210.
** Victailic connection kit (PAW-SYSVICTH) is optional.

Model type supplied may vary.

Bluefin as standard

Bluefin anti-corrosion coating prevents salt damage for a longer life time.

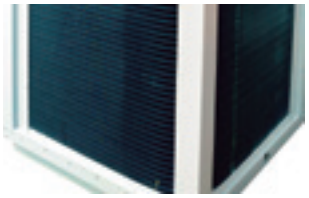

Low noise

ECOi-W series is equipped with the compressor phonic insulation box as a standard.

* Standard in 20-40, 140-210. Optional in 45-125.

ECOi-W quiet operation in full range.

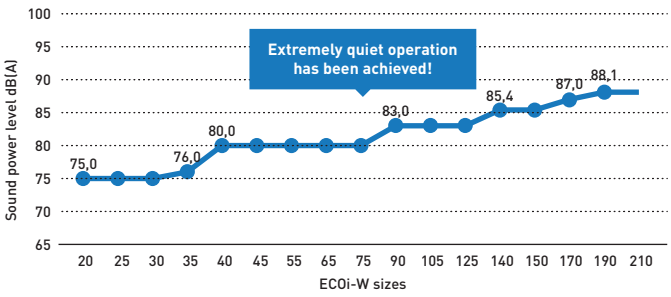

* Performance with standard fans. In the range 45-125, noise performance without low noise option.

Range of ECOi-W outdoor units

Page	Outdoor units	20 kW	25 kW	30 kW	35 kW	40 kW	45 kW	55 kW	65 kW	75 kW
P. 376	ECOi-W 20 to 40	U-020CWNB U-020CWBS	U-025CWNB U-025CWBS	U-030CWNB U-030CWBS	U-035CWNB U-035CWBS	U-040CWNB U-040CWBS				
P. 378	ECOi-W 45 to 75						U-045CWNB U-045CWBM	U-055CWNB U-055CWBM	U-065CWNB U-065CWBM	U-075CWNB U-075CWBM
P. 380	ECOi-W 90 to 125									
P. 382	ECOi-W 140 to 210									

	90 kW	105 kW	125 kW	140 kW	150 kW	170 kW	190 kW	210 kW
	U-090CWNB U-090CWBM	U-105CWNB U-105CWBM	U-125CWNB U-125CWBM					
				U-140CWNB U-140CWBL	U-150CWNB U-150CWBL	U-170CWNB U-170CWBL	U-190CWNB U-190CWBL	U-210CWNB U-210CWBL

U- 020/025/030/035/040 CW

Cooling capacity: 19,4 to 37,4 kW
Heating capacity: 19,5 to 41,6 kW

Compact and powerful heat pump chiller series with Panasonic quality verification. ECOi-W Series guarantees quiet operation.

20 - 25 - 30

35 - 40

- High seasonal efficiency in cooling and heating
- Eurovent certified
- Ambient temperature operation range: -10 to +50 °C in cooling, -17 to +20 °C in heating
- Water outlet temperature range: -10 to +18 °C in cooling, +20 to +50 °C in heating
- Super quiet operation
- Optimized design for service and maintenance
- Simple user friendly control as standard
- Modbus RTU as standard

Ambient temperature.

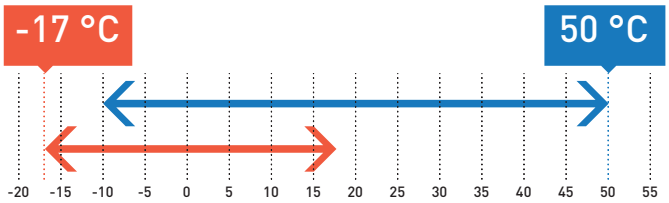

Water outlet temperature.

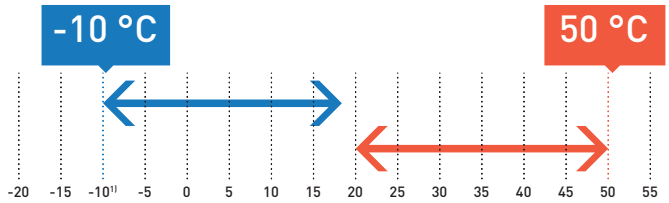

Cooling: Outside air temperature (°C (DB)). Heating: Outside air temperature (°C (WB)).
1) With glycol 45 % maximum, 5 °C without glycol.

Technical focus

- Chiller type: heat pump
- Compressor type (number of compressors): Scroll compressors (2)
- Refrigeration type: R410A
- Refrigerant circuit: 1
- Fan type (number of fans): axial fan (1)
- Heat exchanger: stainless steel plate heat exchanger
- Flow switch, water safety & air purge valves included
- Water filter included (mandatory to be installed on site)
- Night mode setting to save energy and reduce noise level
- Water compensation curve control
- Bluefin anti-corrosion coating
- Optional hydraulic kit
- Optional finned coil treatment
- Optional Modbus TCP/IP, BACnet IP and BACnet MSTP

Available options

Options				
Pump	**Pump drive**	**Hydraulic options**	**Ambient options**	**Miscellaneous options**
Single pump (as standard)	Fixed speed	Low water pressure sensor	Finned coil treatment - epoxy	Soft starter
	Variable twin speed	Water isolation valves	Rubber pads	Power supply w/o neutral
	Variable capacity		Spring damper	Modbus TCP/IP
	Constant outlet pressure		All seasons	BACnet MSTP
	Constant differential pressure		Nordic pack	BACnet IP

See more details on page 386.

PAW-SYSREMKIT
Optional Remote control.

PAW-SYSS0V1
Optional Shut off valves kit for model 20 - 40.

Model			20	25	30	35	40
Standard without buffer tank			**U-020CWNB**	**U-025CWNB**	**U-030CWNB**	**U-035CWNB**	**U-040CWNB**
With buffer tank			**U-020CWBS**	**U-025CWBS**	**U-030CWBS**	**U-035CWBS**	**U-040CWBS**
Power supply	Voltage	V	400	400	400	400	400
	Phase		Three Phase	Three Phase	Three Phase	Three Phase	Three Phase
	Frequency	Hz	50	50	50	50	50
Cooling capacity [1]		kW	19,4	25,3	26,9	35,8	37,4
Input power cooling [1]		kW	6,10	8,61	9,34	13,51	13,64
Total EER 100 % [1]			3,18	2,94	2,88	2,65	2,74
SEER [2]			**3,9**	**3,9**	**3,9**	**3,7**	**3,9**
ηsc [2]		%	153,00	152,00	152,00	144,00	153,00
Heating capacity [3]		kW	19,5	26,9	29,7	37,3	41,6
Input power heating [3]		kW	6,11	9,28	9,93	13,23	13,51
SCOP [4]			**3,4**	**3,3**	**3,3**	**3,4**	**3,4**
ηsh [4]		%	132,00	128,00	128,00	132,00	133,00
Energy efficiency class (Scale A+++ to D) [5]			A+	A+	A+	A+	A+
Startup type			Direct	Direct	Direct	Direct	Direct
Maximum operating current		A	17,70	22,20	24,30	31,80	33,80
Startup current w/o softstarter / w softstarter		A	52,71 / 28,11	63,71 / 35,21	77,29 / 48,79	118,34 / 52,99	119,34 / 53,99
Sound power level (w standard fans)		dB(A)	75,0	75,0	75,0	76,0	76,0
Sound pressure level (w standard fans) [6]		dB(A)	42,8	42,8	42,8	43,8	43,8
Dimensions (w standard fans) w/o buffer tank	H x W x D	mm	1983 x 1000 x 1000	1983 x 1000 x 1000	1983 x 1000 x 1000	1983 x 1000 x 1000	1983 x 1000 x 1000
Dimensions (w standard fans) w buffer tank	H x W x D	mm	1983 x 1000 x 1507	1983 x 1000 x 1507	1983 x 1000 x 1507	1983 x 1000 x 1507	1983 x 1000 x 1507
Weight (w 1 pump) w/o buffer tank		kg	280	290	320	330	330
Weight (w 1 pump) w buffer tank		kg	345	355	385	395	395
Refrigerant (R410A)		kg	6,5	8,4	8,4	9,1	9,2
Number of refrigerant circuit			1	1	1	1	1
Compressors							
Number			2	2	2	2	2
Type			Scroll	Scroll	Scroll	Scroll	Scroll
Part load step		%	0 / 50 / 100	0 / 50 / 100	0 / 50 / 100	0 / 50 / 100	0 / 50 / 100
Crankcase heater		W	2x40	2x40	2x49	2x49	2x49
Evaporator							
Number			1	1	1	1	1
Type			Plate	Plate	Plate	Plate	Plate
Nominal water flow (cooling)		m³/h	3,35	4,36	4,64	6,16	6,44
Water pressure drop (cooling)		kPa	23	37	22	37	40
Water volume		l	1,78	1,78	2,55	2,55	2,55
Antifreeze heater		W	30	30	30	30	30
Coils							
Number			1	1	1	1	1
Frontal surface		m²	2,4	2,4	2,4	2,8	2,8
Number of rows			2	2	2	2	2
Fans standard							
Number			1	1	1	1	1
Airflow		m³/h	9000	13000	13000	16000	16000
Rotation speed		r.p.m.	900	900	900	650	650
Power input (each fan)		W	620	940	940	930	930
Water connections							
Type			Male gas threaded BSPP ISO 228	Male gas threaded BSPP ISO 228	Male gas threaded BSPP ISO 228	Male gas threaded BSPP ISO 228	Male gas threaded BSPP ISO 228
Inlet - diameter		Inch	1 1/2	1 1/2	1 1/2	1 1/2	1 1/2
Outlet - diameter		Inch	1 1/2	1 1/2	1 1/2	1 1/2	1 1/2

Accessories	
PAW-SYSREMKIT	Remote control

Accessories	
PAW-SYSS0V1	Shut off valves kit for model 20 - 40

1) Data refers to 7 °C leaving chilled water temperature and 35 °C condenser air temperature, according EN14511 standard. 2) Following COMMISSION REGULATION (EU) No 2016/2281 for comfort application chillers. 3) Data refers to 45 °C leaving warm water temperature and 7 °C ambient coil air temperature with 87 % R.H., according EN14511 standard. 4) Following COMMISSION REGULATION (EU) No 813/2013 for low-temperature heat pumps. 5) Following COMMISSION REGULATION (EU) No 811/2013 for low-temperature heat pumps. Scale from A+++ to D, as of 26th September 2019. 6) Sound pressure levels calculated at 10 meters. Sound pressure levels refer to ISO standard 3744 with parallel piped shape.
* w: with, w/o: without.

HIGH SEER 3,91 | HIGH SCOP 3,40 | ErP | SUPER QUIET | BLUEFIN | ULTIMATE CUSTOMISATION | AUTOMATIC FAN | -17°C HEATING MODE | 50°C COOLING MODE | BMS CONNECTIVITY

Specifications subject to change without notice. For detailed information about ErP / Energy Labelling, please visit our websites www.aircon.panasonic.eu or www.ptc.panasonic.eu.

U - 045/055/065/075 CW

Cooling capacity: 46,8 to 71,6 kW
Heating capacity: 48,5 to 75,9 kW

High seasonal efficiency in cooling, maximum SEER 4,04 in this range. ECOi-W Series offers a variety of options to meet your needs.

45 - 55

65 - 75

EUROVENT CERTIFIED PERFORMANCE www.eurovent-certification.com

- High seasonal efficiency in cooling and heating
- Eurovent certified
- Ambient temperature operation range: -10 to +50 °C in cooling, -17 to +20 °C in heating
- Water outlet temperature range: -10 to +18 °C in cooling, +20 to +50 °C in heating
- Optional extra-low noise kit available
- Optimized design for service and maintenance
- Simple user friendly control as standard
- Modbus RTU as standard

Ambient temperature.

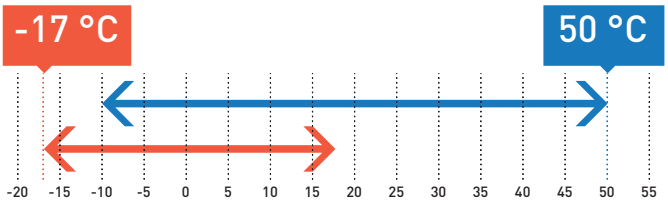

Water outlet temperature.

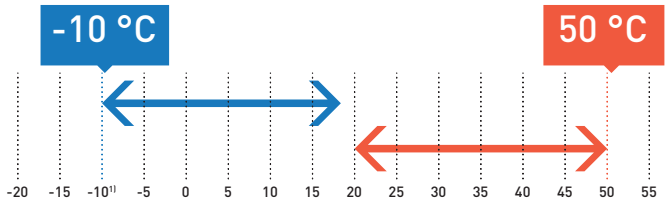

Cooling: Outside air temperature (°C (DB)). Heating: Outside air temperature (°C (WB)).
1) With glycol 45 % maximum, 5 °C without glycol.

Technical focus

- Chiller type: heat pump
- Compressor type (number of compressors): Scroll compressors (2)
- Refrigeration type: R410A
- Refrigerant circuit: 1
- Fan type (number of fans): axial fan (1 for 45/55, 2 for 65/75)
- Heat exchanger: stainless steel plate heat exchanger
- Flow switch, water safety & air purge valves included
- Water filter included (mandatory to be installed on site)
- Night mode setting to save energy and reduce noise level
- Water compensation curve control
- Bluefin anti-corrosion coating
- Optional hydraulic kit
- Optional finned coil treatment
- Optional Modbus TCP/IP, BACnet IP and BACnet MSTP

Available options

Options				
Pump	**Pump drive**	**Hydraulic options**	**Ambient options**	**Miscellaneous options**
Single pump	Fixed speed	Low water pressure sensor	Finned coil treatment - epoxy	Soft starter
Double pump	Variable twin speed	Water isolation valves	Outdoor coil protection grid	Power supply w/o neutral
	Variable capacity		Rubber pads	Modbus TCP/IP
	Constant outlet pressure		Spring damper	BACnet MSTP
	Constant differential pressure		All seasons fan control	BACnet IP
			Extra-low noise kit	Container transport
			High pressure fan	Refrigerant gauge

See more details on page 386.

PAW-SYSREMKIT
Optional Remote control.

PAW-SYSS0V2
Optional Shut off valves kit for model 45 - 75.

Model			**45**	**55**	**65**	**75**
Standard without buffer tank			**U-045CWNB**	**U-055CWNB**	**U-065CWNB**	**U-075CWNB**
With buffer tank			**U-045CWBM**	**U-055CWBM**	**U-065CWBM**	**U-075CWBM**
Power supply	Voltage	V	400	400	400	400
	Phase		Three Phase	Three Phase	Three Phase	Three Phase
	Frequency	Hz	50	50	50	50
Cooling capacity [1]		kW	46,8	53,3	65,8	71,6
Input power cooling [1]		kW	16,90	19,67	22,10	24,26
Total EER 100 % [1]			2,77	2,71	2,98	2,95
SEER [2]			**3,7**	**3,9**	**4,0**	**4,0**
ηsc [2]		%	145,00	151,00	159,00	157,00
Heating capacity [3]		kW	48,5	58,2	67,2	75,9
Input power heating [3]		kW	17,32	20,35	22,47	24,33
SCOP [4]			**3,2**	**3,3**	**3,4**	**3,4**
ηsh [4]		%	126,00	128,00	134,00	133,00
Energy efficiency class (Scale A+++ to D) [5]			A+	A+	A+	—
Startup type			Direct	Direct	Direct	Direct
Maximum operating current		A	40,20	44,20	59,40	64,40
Startup current w/o softstarter / w softstarter		A	133,20 / 65,80	140,20 / 72,80	201,43 / 101,03	206,43 / 106,03
Sound power level (w standard fans)		dB(A)	80,0	80,0	80,0	80,0
Sound pressure level (w standard fans) [6]		dB(A)	47,8	47,8	47,8	47,8
Dimensions (w standard fans) w/o buffer tank	H x W x D	mm	1986 x 2180 x 1160	1986 x 2180 x 1160	1986 x 2180 x 1160	1986 x 2180 x 1160
Dimensions (w standard fans) w buffer tank	H x W x D	mm	1986 x 2680 x 1160	1986 x 2680 x 1160	1986 x 2680 x 1160	1986 x 2680 x 1160
Weight (w 1 pump) w/o buffer tank		kg	540	540	610	610
Weight (w 1 pump) w buffer tank		kg	700	700	770	770
Refrigerant (R410A)		kg	14,0	14,3	18,9	19,3
Number of refrigerant circuit			1	1	1	1
Compressors						
Number			2	2	2	2
Type			Scroll	Scroll	Scroll	Scroll
Part load step		%	0 / 50 / 100	0 / 43 / 57 / 100	0 / 40 / 60 / 100	0 / 45 / 55 / 100
Crankcase heater		W	2x66	2x66	2x66	2x66
Evaporator						
Number			1	1	1	1
Type			Plate	Plate	Plate	Plate
Nominal water flow (cooling)		m³/h	8,06	9,18	11,30	12,31
Water pressure drop (cooling)		kPa	30	35	28	37
Water volume		l	4,10	4,10	6,10	6,10
Antifreeze heater		W	30	30	2x30	2x30
Coils						
Number			1	1	2	2
Frontal surface		m²	4,20	4,20	5,55	5,55
Number of rows			2	2	2	2
Fans standard						
Number			1	1	2	2
Airflow		m³/h	22500	22500	15000	15000
Rotation speed		r.p.m.	790	790	650	650
Power input (each fan)		W	1650	1650	930	930
Water connections						
Type			Male gas threaded BSPP ISO 228	Male gas threaded BSPP ISO 228	Male gas threaded BSPP ISO 228	Male gas threaded BSPP ISO 228
Inlet - diameter		Inch	2	2	2	2
Outlet - diameter		Inch	2	2	2	2

Accessories	
PAW-SYSREMKIT	Remote control

Accessories	
PAW-SYSS0V2	Shut off valves kit for model 45 - 75

1) Data refers to 7 °C leaving chilled water temperature and 35 °C condenser air temperature, according EN14511 standard. 2) Following COMMISSION REGULATION (EU) No 2016/2281 for comfort application chillers. 3) Data refers to 45 °C leaving warm water temperature and 7 °C ambient coil air temperature with 87 % R.H., according EN14511 standard. 4) Following COMMISSION REGULATION (EU) No 813/2013 for low-temperature heat pumps. 5) Following COMMISSION REGULATION (EU) No 811/2013 for low-temperature heat pumps. Scale from A+++ to D, as of 26th September 2019. 6) Sound pressure levels calculated at 10 meters. Sound pressure levels refer to ISO standard 3744 with parallel piped shape.
* w: with, w/o: without.

HIGH SEER 4,04 | HIGH SCOP 3,43 | ErP ✔ | BLUEFIN | ULTIMATE CUSTOMISATION | AUTOMATIC FAN | -17°C HEATING MODE | 50°C COOLING MODE | BMS CONNECTIVITY

Specifications subject to change without notice. For detailed information about ErP / Energy Labelling, please visit our websites www.aircon.panasonic.eu or www.ptc.panasonic.eu.

U - 090/105/125 CW

Cooling capacity: 91,4 to 121,9 kW
Heating capacity: 88,1 to 119,1 kW

Customizable design gives high flexibility. Wide range of communication protocols fulfill the requirements in hotels, offices, industry applications.

- High seasonal efficiency in cooling and heating
- Eurovent certified
- Ambient temperature operation range: -10 to +50 °C in cooling, -17 to +20 °C in heating
- Water outlet temperature range: -10 to +18 °C in cooling, +20 to +50 °C in heating
- Optional extra-low noise kit available
- Optimized design for service and maintenance
- Simple user friendly control as standard
- Modbus RTU as standard

Ambient temperature.

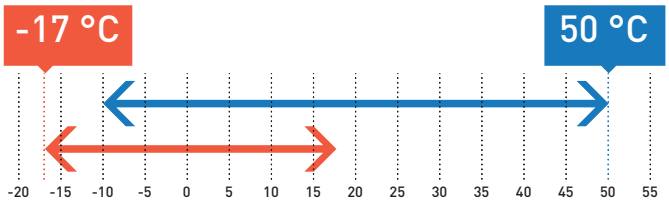

Water outlet temperature.

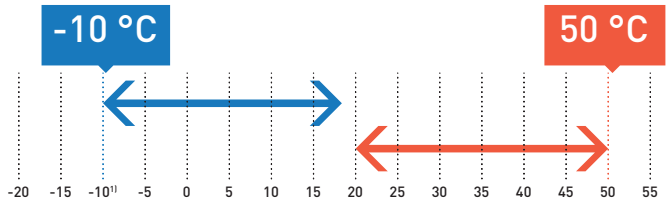

Cooling: Outside air temperature (°C (DB)). Heating: Outside air temperature (°C (WB)).
1) With glycol 45 % maximum, 5 °C without glycol.

Technical focus

- Chiller type: heat pump
- Compressor type (number of compressors): Scroll compressors (2)
- Refrigeration type: R410A
- Refrigerant circuit: 1
- Fan type (number of fans): axial fan (2)
- Heat exchanger: stainless steel plate heat exchanger
- Flow switch, water safety & air purge valves included
- Water filter included (mandatory to be installed on site)
- Night mode setting to save energy and reduce noise level
- Water compensation curve control
- Bluefin anti-corrosion coating
- Optional hydraulic kit
- Optional finned coil treatment
- Optional Modbus TCP/IP, BACnet IP and BACnet MSTP

Available options

Options				
Pump	**Pump drive**	**Hydraulic options**	**Ambient options**	**Miscellaneous options**
Single pump	Fixed speed	Low water pressure sensor	Finned coil treatment - epoxy	Soft starter
Double pump	Variable twin speed	Water isolation valves	Outdoor coil protection grid	Power supply w/o neutral
	Variable capacity		Rubber pads	Modbus TCP/IP
	Constant outlet pressure		Spring damper	BACnet MSTP
	Constant differential pressure		All seasons fan control	BACnet IP
			Extra-low noise kit	Container transport
			High pressure fan	Refrigerant gauge

See more details on page 386.

PAW-SYSREMKIT
Optional Remote control.

PAW-SYSS0V3
Optional Shut off valves kit for model 90 - 125.

Model			**90**	**105**	**125**
Standard without buffer tank			**U-090CWNB**	**U-105CWNB**	**U-125CWNB**
With buffer tank			**U-090CWBM**	**U-105CWBM**	**U-125CWBM**
Power supply	Voltage	V	400	400	400
	Phase		Three Phase	Three Phase	Three Phase
	Frequency	Hz	50	50	50
Cooling capacity [1]		kW	91,4	106,2	121,9
Input power cooling [1]		kW	34,36	38,06	46,35
Total EER 100 % [1]			2,66	2,79	2,63
SEER [2]			**3,9**	**3,9**	**3,9**
ηsc [2]		%	153,00	152,00	153,00
Heating capacity [3]		kW	88,1	101,0	119,1
Input power heating [3]		kW	33,75	38,40	45,46
SCOP [4]			**3,3**	**3,3**	**3,4**
ηsh [4]		%	128,00	129,00	131,00
Startup type			Direct	Direct	Direct
Maximum operating current		A	77,90	86,00	102,00
Startup current w/o softstarter / w softstarter		A	264,90/127,30	311,96/145,76	349,96/182,56
Sound power level (w standard fans)		dB(A)	83,0	83,0	83,0
Sound pressure level (w standard fans) [5]		dB(A)	50,8	50,8	50,8
Dimensions (w standard fans) w/o buffer tank	H x W x D	mm	2286 x 2180 x 1160	2286 x 2180 x 1160	2286 x 2180 x 1160
Dimensions (w standard fans) w buffer tank	H x W x D	mm	2286 x 2680 x 1160	2286 x 2680 x 1160	2286 x 2680 x 1160
Weight (w 1 pump) w/o buffer tank		kg	790	900	920
Weight (w 1 pump) w buffer tank		kg	950	1060	1080
Refrigerant (R410A)		kg	22,0	32,3	33,0
Number of refrigerant circuit			1	1	1
Compressors					
Number			2	2	2
Type			Scroll	Scroll	Scroll
Part load step		%	0/45/55/100	0/38/62/100	0/33/67/100
Crankcase heater		W	66/82	66/95	66/95
Evaporator					
Number			1	1	1
Type			Plate	Plate	Plate
Nominal water flow (cooling)		m³/h	15,73	18,25	20,95
Water pressure drop (cooling)		kPa	26	34	45
Water volume		l	10,80	10,80	10,80
Antifreeze heater		W	2x30	2x30	2x30
Coils					
Number			2	2	2
Frontal surface		m²	6,4	6,4	6,4
Number of rows			2	3	3
Fans standard					
Number			2	2	2
Airflow		m³/h	21000	21000	21000
Rotation speed		r.p.m.	790	790	790
Power input (each fan)		W	1650	1650	1650
Water connections					
Type			Male gas threaded BSPP ISO 228	Male gas threaded BSPP ISO 228	Male gas threaded BSPP ISO 228
Inlet - diameter		Inch	2 1/2	2 1/2	2 1/2
Outlet - diameter		Inch	2 1/2	2 1/2	2 1/2

Accessories	
PAW-SYSREMKIT	Remote control

Accessories	
PAW-SYSS0V3	Shut off valves kit for model 90 - 125

1) Data refers to 7 °C leaving chilled water temperature and 35 °C condenser air temperature, according EN14511 standard. 2) Following COMMISSION REGULATION (EU) No 2016/2281 for comfort application chillers. 3) Data refers to 45 °C leaving warm water temperature and 7 °C ambient coil air temperature with 87 % R.H., according EN14511 standard. 4) Following COMMISSION REGULATION (EU) No 813/2013 for low-temperature heat pumps. 5) Sound pressure levels calculated at 10 meters. Sound pressure levels refer to ISO standard 3744 with parallel piped shape.
* w: with, w/o: without.

HIGH SEER 3,89 | HIGH SCOP 3,35 | ErP ✔ | BLUEFIN | ULTIMATE CUSTOMISATION | AUTOMATIC FAN | -17°C HEATING MODE | 50°C COOLING MODE | BMS CONNECTIVITY

U - 140/150/170/190/210 CW

Cooling capacity: 125,4 to 195,4 kW
Heating capacity: 143,7 to 217,6 kW

Heat pump chiller series with powerful operation by 4 scroll compressors. Maximum water outlet temperature in heating is up to 55 °C [1]. Defrost limiting design ensures to provide stable hot water even at low ambient conditions.

· Smart defrost:
Defrost limiting design to ensure a constant water outlet temperature even at very low temperatures

1 DEFROST CYCLE EVERY 130 MINUTES.	Heating Capacity: +22 % Integrated COP: +15 % Improved SCOP Class

· High seasonal efficiency in cooling and heating
· Eurovent certified
· Ambient temperature operation range: -10 to +50 °C in cooling, -17 to +20 °C in heating
· Water outlet temperature range: -10 to +18 °C in cooling, +20 - +55 °C [1] in heating
· Super quiet operation
· Victaulic water connections
· Optimized design for service and maintenance
· Simple user friendly control as standard
· Modbus RTU as standard
· Modbus TCP/IP as standard

Ambient temperature.

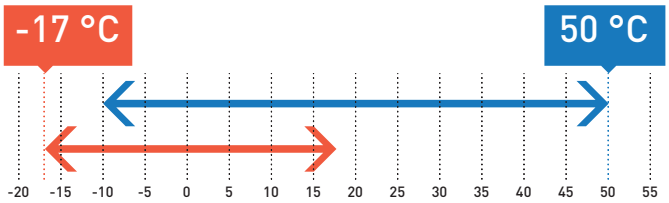

Water outlet temperature.

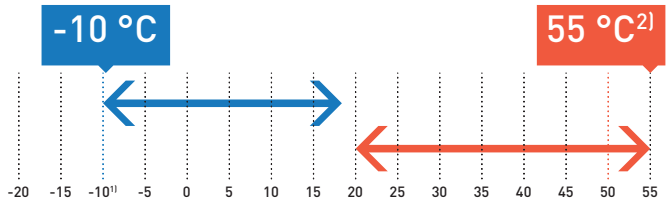

Cooling: Outside air temperature (°C (DB)). Heating: Outside air temperature (°C (WB)).
1) With glycol 45 % maximum, 5 °C without glycol. 2) Please contact an authorized Panasonic dealer in the case of condition > 50 °C.

Technical focus

· Chiller type: heat pump
· Compressor type (number of compressors): Scroll compressors (4)
· Refrigeration type: R410A
· Refrigerant circuit: 2
· Fan type (number of fans): axial fan (4)
· Heat exchanger: stainless steel plate heat exchanger
· Flow switch, water safety & air purge valves included
· Water filter included (mandatory to be installed on site)
· Night mode setting to save energy and reduce noise level
· Water compensation curve control
· Bluefin anti-corrosion coating
· Optional hydraulic kit
· Optional finned coil treatment
· Optional gauges hydraulic and refrigerant
· Optional BACnet

1) Please contact an authorized Panasonic dealer in the case of condition > 50 °C.

Available options

Options				
Pump	**Pump drive**	**Hydraulic options**	**Ambient options**	**Miscellaneous options**
Single pump Low Pressure	Fixed speed	Low water pressure sensor	Finned coil treatment - epoxy	Soft starter
Single pump High Pressure	Variable twin speed	Water isolation valves	Outdoor coil protection grid	Power supply w/o neutral
Double pump Low Pressure	Variable capacity	Hydraulic gauges	Rubber pads	Modbus TCP/IP
Double pump High Pressure	Constant outlet pressure		Spring damper	BACnet IP
	Constant differential pressure		All seasons fan control	Refrigerant gauge
			Nordic pack	
			High pressure fan	

See more details on page 386.

PAW-SYSREMKIT
Optional Remote control.

Model			140	150	170	190	210
Standard without buffer tank			**U-140CWNB**	**U-150CWNB**	**U-170CWNB**	**U-190CWNB**	**U-210CWNB**
With buffer tank			**U-140CWBL**	**U-150CWBL**	**U-170CWBL**	**U-190CWBL**	**U-210CWBL**
Power supply	Voltage	V	400	400	400	400	400
	Phase		Three Phase	Three Phase	Three Phase	Three Phase	Three Phase
	Frequency	Hz	50	50	50	50	50
Cooling capacity [1]		kW	125,4	137,6	150,9	175,8	195,4
Input power cooling [1]		kW	43,55	47,77	52,73	64,83	72,54
Total EER 100 % [1]			2,88	2,88	2,86	2,71	2,69
SEER [2]			**3,9**	**3,9**	**3,9**	**3,7**	**3,7**
ηsc [2]		%	152,00	152,00	153,00	145,00	144,00
Heating capacity [3]		kW	143,7	153,7	170,1	194,9	217,6
Input power heating [3]		kW	45,80	50,20	55,40	67,50	78,30
SCOP [4]			**3,3**	**3,4**	**3,3**	**3,3**	**3,2**
ηsh [4]		%	130,00	132,00	129,00	129,00	126,00
Startup type			Direct	Direct	Direct	Direct	Direct
Maximum operating current		A	108,00	119,00	136,00	153,00	170,00
Startup current w/o softstarter / w softstarter		A	251,00 / 130,00	262,00 / 141,00	324,00 / 161,00	341,00 / 178,00	396,00 / 201,00
Sound power level (w standard fans)		dB(A)	85,4	85,4	87,0	88,1	88,1
Sound pressure level (w standard fans) [5]		dB(A)	53,4	53,4	55,0	56,1	56,1
Dimensions (w standard fans) w/o buffer tank	H x W x D	mm	2295 x 2856 x 2210	2295 x 2856 x 2210	2321 x 2856 x 2210	2321 x 2856 x 2210	2321 x 2856 x 2210
Dimensions (w standard fans) w buffer tank	H x W x D	mm	2295 x 3666 x 2210	2295 x 3666 x 2210	2321 x 3666 x 2210	2321 x 3666 x 2210	2321 x 3666 x 2210
Weight (w 1 low Pa pump) w/o buffer tank		kg	1512	1515	1605	1677	1937
Weight (w 1 low Pa pump) w buffer tank		kg	1644	1647	1737	1809	2069
Refrigerant (R410A)		kg	2x24,7	2x24,7	24,7/33,3	2x33,3	2,33,3
Number of refrigerant circuit			2	2	2	2	2
Compressors							
Number			4	4	4	4	4
Type			Scroll	Scroll	Scroll	Scroll	Scroll
Part load step		%	0 / 24 / 26 / 48 / 50 / 52 / 74 / 76 / 100	0 / 23 / 27 / 46 / 50 / 54 / 73 / 77 / 100	0 / 20 / 24 / 44 / 45 / 55 / 69 / 80 / 100	0 / 22 / 28 / 44 / 50 / 56 / 72 / 78 / 100	0 / 19 / 31 / 38 / 50 / 62 / 69 / 81 / 100
Crankcase heater		W	4x66	4x66	3x66/82	2x82/2x66	2x95/2x66
Evaporator							
Number			1	1	1	1	1
Type			Plate	Plate	Plate	Plate	Plate
Nominal water flow (cooling)		m³/h	21,56	23,65	25,95	30,24	33,62
Water pressure drop (cooling)		kPa	33	39	24	32	40
Water volume		l	8,49	8,49	12,21	12,21	12,21
Antifreeze heater		W	60	60	120	120	120
Coils							
Number			4	4	4	4	4
Frontal surface		m²	11,88	11,88	11,88	11,88	11,88
Number of rows			2+2	2+2	2+3	3+3	3+3
Fans standard							
Number			4	4	4	4	4
Airflow		m³/h	56000	56000	71000	86000	83000
Rotation speed		r.p.m.	900	900	900	900	900
Power input (each fan)		W	940	940	940 - 1650	1650	1650
Water connections							
Type			Victaulic	Victaulic	Victaulic	Victaulic	Victaulic
Inlet - diameter		Inch	2 1/2	2 1/2	2 1/2	2 1/2	2 1/2
Outlet - diameter		Inch	2 1/2	2 1/2	2 1/2	2 1/2	2 1/2

Accessories	
PAW-SYSREMKIT	Remote control

Accessories	
PAW-SYSVICTH	Victaulic connection kit for model 140 - 210

1) Data refers to 7 °C leaving chilled water temperature and 35 °C condenser air temperature, according EN14511 standard. 2) Following COMMISSION REGULATION (EU) No 2016/2281 for comfort application chillers. 3) Data refers to 45 °C leaving warm water temperature and 7 °C ambient coil air temperature with 87 % R.H., according EN14511 standard. 4) Following COMMISSION REGULATION (EU) No 813/2013 for low-temperature heat pumps. 5) Sound pressure levels calculated at 10 meters. Sound pressure levels refer to ISO standard 3744 with parallel piped shape.
* w: with, w/o: without.

HIGH SEER 3,91 | HIGH SCOP 3,36 | ErP | SUPER QUIET | BLUEFIN | AUTOMATIC FAN | ULTIMATE CUSTOMISATION | -17°C HEATING MODE | 50°C COOLING MODE | DEFROST LIMITING | BMS CONNECTIVITY

Specifications subject to change without notice. For detailed information about ErP / Energy Labelling, please visit our websites www.aircon.panasonic.eu or www.ptc.panasonic.eu.

Control

Simple user friendly control

Main features	
Basic operation	ON/OFF setting
	Cooling / Heating mode setting
Energy Saving	Intelligent logic control for inlet water temperature
	Night setback operation to reduce electrical consumption and noise
	Part load operating mode
	Maximum discharge temperature control
Service / Maintenance	Automatic test operation at the push of a button
	Alarm notice with the latest 10 alarms
	Counter for operating hours of compressor and pump
	Compressor operating limits saved in a flash memory
Others	BMS compatible (RS485 ModBus RTU or BacNet MSTP protocol)

A control panel with intuitive design is equipped on all ECOi-W systems as standard.

The microprocessor based control has a new IHM logic and implements a smart handling for your demand.

Fan coils application with ECOi-W heat pump chiller system

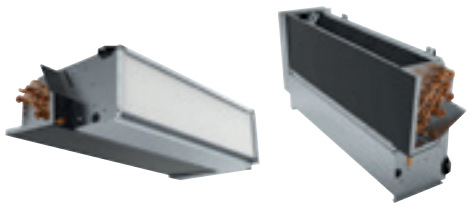

ECOi-W series can be integrated with fan coils to optimize comfort.

Easy to install, improved sound level and performance

Quiet & comfort operation.
Cooling capacity 1,0 to 15 kW. Heating capacity: 1,5 to 20 kW.

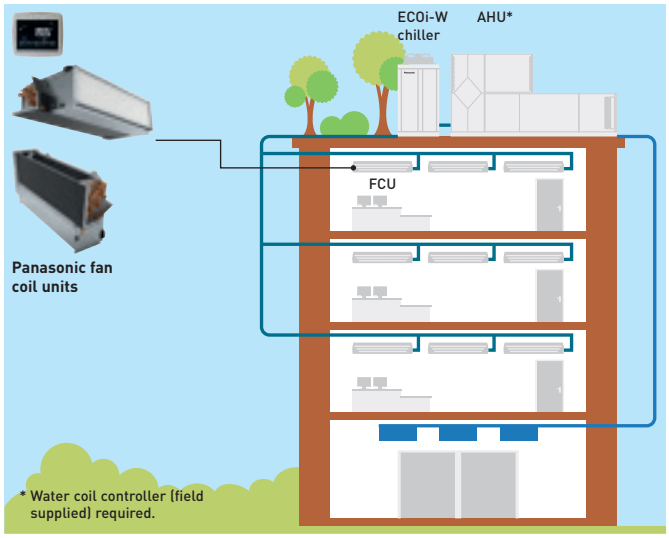

1 **Innovation for an optimum comfort**

2 **Low energy consumption fan**

3 **Efficient high-quality coil**

4 **Flexible installation: vertical or horizontal**

Range of fan coil units

This advanced controller provides a higher level and performance. The fan coil range consists of a compact ducted range ideal for residential and commercial use and one model with high static pressure for commercial applications. All units are certified by Eurovent, include drain pan and filter and are equipped with a low consumption fan motor.
The D type is even more flexible thanks to an L-shaped drain pan. The unit can be installed either in a horizontal or in a vertical position.

Fan coil controller PAW-FC-RC1

This advanced controller provides a higher level of comfort in heating. The sensor can be used as a water flow sensor, stopping the fan when the water temperature is low, avoiding cold drafts in winter.

Features:
· Room thermostat
· 3 outputs, 230 V relays for fan control
· 2 outputs, 230 V relays for heating / cooling control
· Modbus RTU slave
· 1 DI for presence detection (key card switch)
· 1 AI for sensor

			Compact units								High Static Pressure
Left side connection			PAW-FC-D11-1	PAW-FC-D15-1	PAW-FC-D24-1	PAW-FC-D28-1	PAW-FC-D40-1	PAW-FC-D55-1	PAW-FC-D65-1	PAW-FC-D90-1	PAW-FC-H150
Right side connection			PAW-FC-D11-1-R	PAW-FC-D15-1-R	PAW-FC-D24-1-R	PAW-FC-D28-1-R	PAW-FC-D40-1-R	PAW-FC-D55-1-R	PAW-FC-D65-1-R	PAW-FC-D90-1-R	PAW-FC-H150-R
Total cooling capacity [1]	Med/S-Hi	kW	1,0/1,5	1,2/1,7	2,0/2,5	2,4/3,2	3,2/4,6	4,6/5,8	6,1/7,3	6,1/8,1	11,9/14,8
Sensible cooling capacity [1]	Med/S-Hi	kW	0,8/1,1	0,9/1,3	1,5/1,9	1,8/2,3	2,2/3,3	3,3/4,5	4,3/5,1	4,6/6,3	9,6/12,9
Heating capacity [1]	Med/S-Hi	kW	1,4/2,0	1,5/2,2	2,4/3,1	2,9/4,0	4,1/5,7	5,3/7,1	7,9/9,3	8,1/11,6	14,9/19,9
Power consumption	S-Lo/Med/S-Hi	W	14/24/36	10/18/29	16/37/45	15/37/56	28/55/72	37/75/105	53/100/147	90/112/188	180/421/675
Fuse rating		A	2	2	2	2	2	2	2	2	6
Dimensions [2]	H x W x D	mm	220x570x430	220x570x430	220x753x430	220x938x430	220x1122x430	220x1307x430	220x1121x530	220x1316x530	356x1600x798
Weight [3]		kg	13	13	15	20	22	26	27	38	63
Sound power global	S-Lo/Med/S-Hi	dB(A)	33/40/49	31/43/50	30/45/52	30/44/51	34/46/56	38/51/58	43/56/61	50/55/64	52/64/71
Sound pressure global	S-Lo/Med/S-Hi	dB(A)	24/31/40	22/34/41	21/36/43	21/35/42	25/37/47	29/42/49	34/47/52	41/46/55	31/45/51
Static pressure	Max	Pa	30	30	50	50	70	70	70	70	110
Airflow [1]	Med/S-Hi	m³/h	190/283	179/265	274/390	357/499	486/716	640/933	893/1064	936/1397	2112/3176
Water pressure drop	Med/S-Hi	kPa	19,5/39,2	3,9/6,3	19,3/28,8	17,1/28	22,8/46,9	37,4/60,2	15,4/21,5	19,3/32,5	19,8/26,1
Fan speeds			3 speeds	3 speeds	3 speeds	3 speeds	3 speeds	3 speeds	3 speeds	3 speeds	3 speeds
Fan motor and number of speeds			AC 5 speeds	AC 5 speeds	AC 5 speeds	AC 5 speeds	AC 5 speeds	AC 5 speeds	AC 5 speeds	AC 5 speeds	AC 5 speeds
Drain pan and air filter			Included	Included	Included	Included	Included	Included	Included	Included	Included
Water connections		Inch	1/2	1/2	1/2	1/2	1/2	1/2	3/4	3/4	1

Accessories	
PAW-FC-RC1	Advanced wired remote controller for fan coils
PAW-FC-903TC	**NEW** Wired remote controller for fan coils (available from April 2020)
PAW-FC-2WY-11/55-1	2 way valve + drain pan (for PAW-FC-D11/15/24/28/40/55-1)
PAW-FC-2WY-65/90-1	2 way valve + drain pan (for PAW-FC-D65/90-1)

Accessories	
PAW-FC-2WY-150	2 way valve (for PAW-FC-H150)
PAW-FC-3WY-11/55-1	3 way valve + drain pan (for PAW-FC-D11/15/24/28/40/55-1)
PAW-FC-3WY-65/90-1	3 way valve + drain pan (for PAW-FC-D65/90-1)
PAW-FC-3WY-150	3 way valve (for PAW-FC-H150)

1) Airflow and capacity at 0 Pa of static pressure. 2) Including pan and electrical box. 3) Without water content. * Performances based on: Cooling: Air: 27 °C DB / 19 °C WB, Chilled water: 7 °C / 12 °C - Heating: Air: 20 °C DB, Hot water: 50 °C / 45 °C. ** Fan coil units are produced by Systemair.

Model referencing and options

Options table 20 - 125

Option	Type	Ref.	Description	Model											
1	Capacity			20	25	30	35	40	45	55	65	75	90	105	125
2	Refrigerant & compressor type	W	R410A fixed speed	•	•	•	•	•	•	•	•	•	•	•	•
3	Buffer tank option	NB	No buffer	Std	Std	Std	Std	Std	Std	Std	Std	Std	Std	Std	Std
		BS	Buffer tank (small)	•	•	•	•	•							
		BM	Buffer tank (medium)						•	•	•	•	•	•	•
4	Pump option		No pump	•	•	•	•	•	Std	Std	Std	Std	Std	Std	Std
			Single pump	Std	Std	Std	Std	Std	•	•	•	•	•	•	•
			Double pump						•	•	•	•	•	•	•
5	Pump drive option		Pump drive - fixed speed *	Std	Std	Std	Std	Std	Std	Std	Std	Std	Std	Std	Std
			Pump drive - variable twin speed (single pump)	•	•	•	•	•	•	•	•	•	•	•	•
			Pump drive - variable twin speed (double pump)						•	•	•	•	•	•	•
			Pump drive - variable capacity (single pump)	•	•	•	•	•	•	•	•	•	•	•	•
			Pump drive - variable capacity (double pump)						•	•	•	•	•	•	•
			Pump drive - constant outlet pressure (single pump)	•	•	•	•	•	•	•	•	•	•	•	•
			Pump drive - constant outlet pressure (double pump)						•	•	•	•	•	•	•
			Pump drive - constant differential pressure (single pump) **	SO	SO	SO	SO	SO	SO	SO	SO	SO	SO	SO	SO
6	Hydraulic options		No hydraulic option	Std	Std	Std	Std	Std	Std	Std	Std	Std	Std	Std	Std
			Low water pressure sensor	•	•	•	•	•	•	•	•	•	•	•	•
			Water isolation valves	•	•	•	•	•	•	•	•	•	•	•	•
			Electric heater - low power						•	•	•	•	•	•	•
			Electric heater - high power						•	•	•	•	•	•	•
7	Ambient options		No ambient options	Std	Std	Std	Std	Std	Std	Std	Std	Std	Std	Std	Std
			Finned coil treatment - epoxy	•	•	•	•	•	•	•	•	•	•	•	•
			Outdoor coil protection grid	•	•	•	•	•	•	•	•	•	•	•	•
			Rubber pads	•	•	•	•	•	•	•	•	•	•	•	•
			Spring damper	•	•	•	•	•	•	•	•	•	•	•	•
			All seasons (fan speed control)	•	•	•	•	•	•	•	•	•	•	•	•
			Nordic pack ***	•	•	•	•	•							
			Low noise	Std	Std	Std	Std	Std	•	•	•	•	•	•	•
			High pressure fan ****		•	•	•	•	•	•	•	•	•	•	•
8	Miscellaneous options		No miscellaneous options	Std	Std	Std	Std	Std	Std	Std	Std	Std	Std	Std	Std
			Soft starter	•	•	•	•	•	•	•	•	•	•	•	•
			Power supply w/o neutral *****	SO	SO	SO	SO	SO	SO	SO	SO	SO	SO	SO	SO
			Standard BMS option (Modbus RTU)	Std	Std	Std	Std	Std	Std	Std	Std	Std	Std	Std	Std
			Modbus TCP/IP	•	•	•	•	•	•	•	•	•	•	•	•
			BACnet MSTP	•	•	•	•	•	•	•	•	•	•	•	•
			BACnet IP	•	•	•	•	•	•	•	•	•	•	•	•
			Container transport						•	•	•	•	•	•	•
			Refrigerant gauge						•	•	•	•	•	•	•

* Fixed speed pump drive is standard when selecting a pump. Please select an alternative pump drive if required.
** Constant differential pump drive option is only available on a special order and requires additional production time. Please contact your local sales representative.
*** The Nordic pack is not required on models 45 - 125 due to model design.
**** High pressure fan is not available on model 20 due to body design.
***** Power supply without neutral is only available on a special order and requires additional production time. Please contact your local sales representative.

Options table 140 - 210

Option	Type	Ref.	Description	Model				
1	Capacity			140	150	170	190	210
2	Refrigerant & compressor type	W	R410A fixed speed	•	•	•	•	•
3	Buffer tank option	NB	No buffer	Std	Std	Std	Std	Std
		BL	Buffer tank (large)	•	•	•	•	•
4	Pump option		No pump	Std	Std	Std	Std	Std
			Single pump low pressure	•	•	•	•	•
			Single pump high pressure	•	•	•	•	•
			Double pump low pressure	•	•	•	•	•
			Double pump high pressure	•	•	•	•	•
5	Pump drive option		Pump drive - fixed speed *	Std	Std	Std	Std	Std
			Pump drive - variable twin speed (single pump)	•	•	•	•	•
			Pump drive - variable twin speed (double pump)	•	•	•	•	•
			Pump drive - variable capacity (single pump)	•	•	•	•	•
			Pump drive - variable capacity (double pump)	•	•	•	•	•
			Pump drive - constant outlet pressure (single pump)	•	•	•	•	•
			Pump drive - constant outlet pressure (double pump)	•	•	•	•	•
			Pump drive - constant differential pressure (single pump) **	SO	SO	SO	SO	SO
			Pump drive - constant differential pressure (double pump) **	SO	SO	SO	SO	SO
6	Hydraulic options		No hydraulic option	Std	Std	Std	Std	Std
			Low water pressure sensor	•	•	•	•	•
			Water isolation valves	•	•	•	•	•
			Hydraulic gauges	•	•	•	•	•
7	Ambient options		No ambient options	Std	Std	Std	Std	Std
			Finned coil treatment - epoxy	•	•	•	•	•
			Outdoor coil protection grid ***	•	•	•	•	•
			Rubber pads	•	•	•	•	•
			Spring damper	•	•	•	•	•
			All seasons (fan speed control)	•	•	•	•	•
			Nordic pack	•	•	•	•	•
			Low noise	Std	Std	Std	Std	Std
			High pressure fan	•	•	•	•	•
8	Miscellaneous options		No miscellaneous options	Std	Std	Std	Std	Std
			Soft starter	•	•	•	•	•
			Power supply w/o neutral	•	•	•	•	•
			Standard BMS Option (Modbus RTU)	Std	Std	Std	Std	Std
			Modbus TCP/IP	•	•	•	•	•
			BACnet IP	•	•	•	•	•
			Refrigerant gauge	•	•	•	•	•

* Fixed speed pump drive is standard when selecting a pump. Please select an alternative pump drive if required.
** Constant differential pump drive options are only available on a special order and requires additional production time. Please contact your local sales representative.
*** Not available when using Nordic pack.

CO_2
REFRIGERATION

Panasonic condensing units with natural refrigerant

The new environmentally friendly CO_2 condensing units for commercial refrigeration.
With Panasonic condensing units you can expect: · Energy savings · Low noise levels · Light weight · Low refrigerant charge · Low installation cost · Low costs on servicing

Choose the green solution by Panasonic

ENVIRONMENTALLY FRIENDLY
CO_2
CONDENSING UNITS

Why CO_2?: Natural refrigerant

EU F-Gas regulation is a key priority for European countries. It ensures compliance with the Kigali Amendment supporting international climate commitments on greenhouse gases and leading the global transition to climate-friendly HFC-free technologies.
Carbon dioxide (R744) is regaining its place in the refrigeration world. Driven by environmental concerns, legislation now requires increased adoption of 'alternative' refrigerants, such as CO_2.
CO_2 is an environmentally-friendly solution, with zero ODP and "GWP" (Global Warming Potential)=1 means natural substance in the atmosphere.
In Europe a step-by-step HFC reduction has been in place since the F-Gas regulation was introduced in 2015.
Countries all over the world have actively been preparing to enact the necessary domestic legislation to implement the agreement to reduce the use of HFCs.

Panasonic is now able to provide a solution in Europe with CO_2 refrigeration systems to prevent global warming and to support environment-friendly retail operations.
The following table shows how well R744 (CO_2) performs regarding environmental impact and safety.

ODP (Ozone Depletion Potential) = 0 - GWP (Global Warming Potential) = 1.

	Next generation refrigerant			Current refrigerant	
	CO_2	Ammonia	Isobutane	R410A	R404A
ODP	**0**	0	0	0	0
GWP	**1**	0	4	2090	3920
Flammability	**Non flammable**	Light flammable	Flammable	Non flammable	Non flammable
Toxicity	**No**	Yes	No	No	No

Comparison of CO_2 emissions

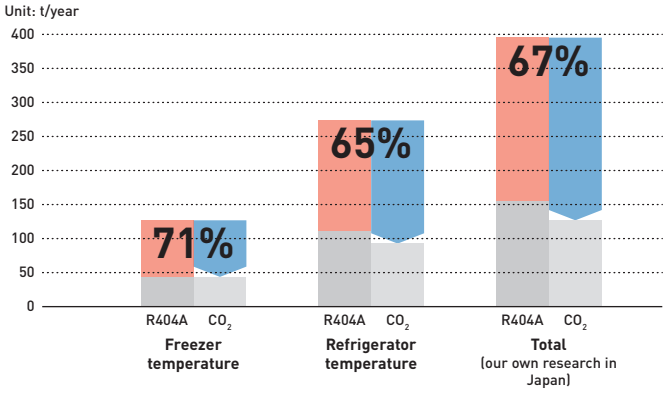

ENERGY SAVING
25,4 % Freezer
16,2 % Refrigeration

CO_2 EMISSION
67 % Reduction

Direct influence [1]
Indirect influence [2]

1) Direct influence presents the effect of refrigerant leakage comparing R744 (CO_2) with R404A.
2) Indirect influence presents CO_2 emissions linked to power consumption of CO_2 unit and conventional units.

By Panasonic research in Japan. Comparing 6 shops average for R404A inverter multi condensing unit.

Energy saving

Natural CO_2 / R744.
R744 refrigerant provides higher energy saving and lower CO_2 emission compared to R404A. Zero ODP and GWP=1 means natural substance.

Inverter+.
Inverter Plus System classification highlights Panasonic's highest performing systems.

High efficiency compressor.
Powerful 2-stage CO_2 rotary compressor by Panasonic. It delivers high performance all year around.

High performance and comfortability

Super quiet.
Systems operate extremely quiet. Minimum 35,5dB(A) @10 m with 200VF5 model.

Operation range up to 43 °C.
The system operates up to 43 °C, allowing for installation in various locations.

Anti corrosion coating.
Selectable fin type with or without an anti corrosion coating. The anti corrosion coating prevents salt damage for a longer lifespan.

Heat recovery port.
The heat recovery port is available to cut running costs as optional. By utilizing exhausted heat generated by refrigeration to the energy source for heating.

Automatic fan.
Microprocessor control automatically adjusts the outdoor fan speed in CO_2 systems for efficient operation.

5 Years compressor warranty.
We guarantee the outdoor unit compressors in the entire range for five years.

High connectivity

BMS connectivity.
The system can by supervised with major monitoring system.

Natural solution with high energy saving

Showcases

Convenience stores, supermarkets, service stations.

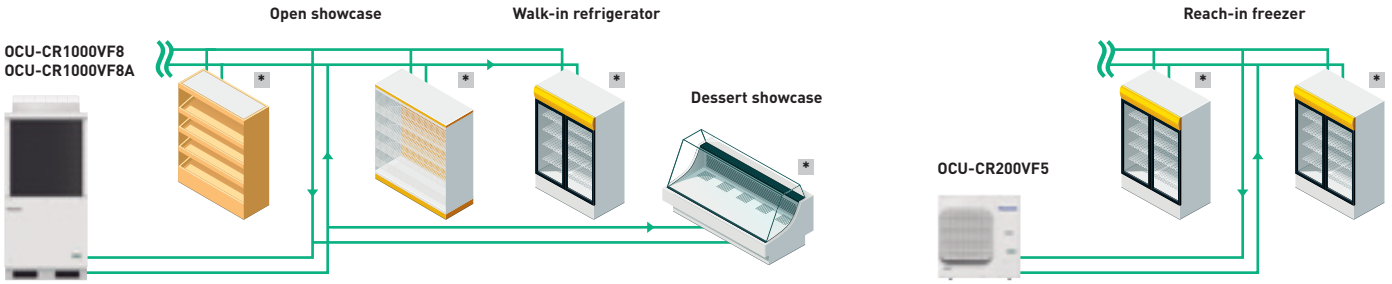

* Controllers: PAW-CO2-PANEL or local supply.

Cold room application to keep food fresh

Restaurants, schools, fast food chains.

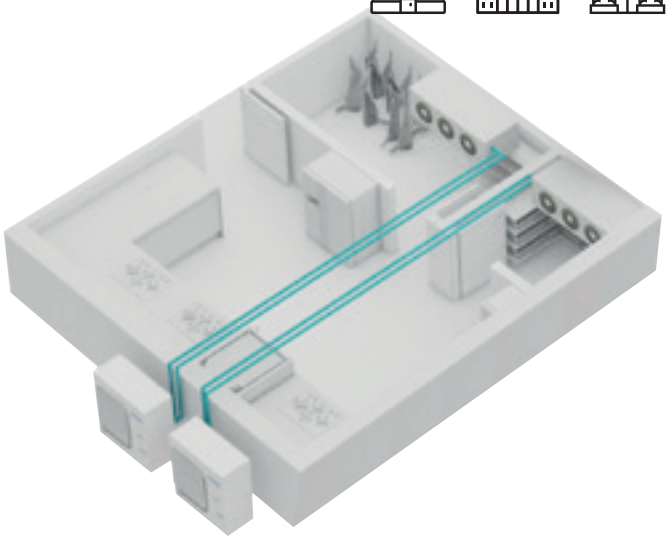

Cold room application integrated with PACi systems

Panasonic offers various solutions for cold rooms by combining a wide range of products.
Integrated with PACi system, it allows for flexible design and installation.

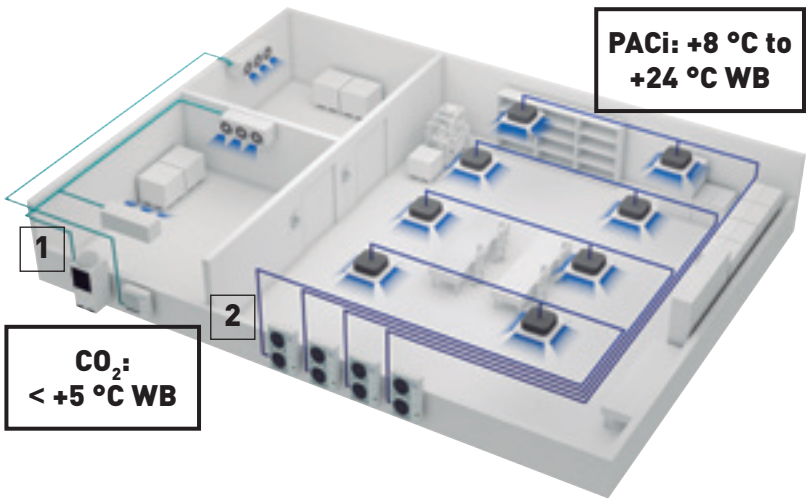

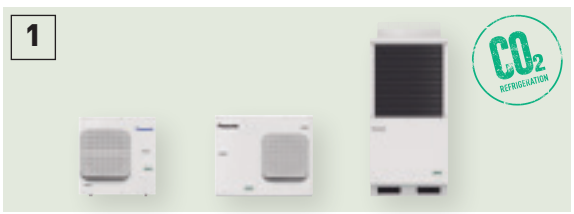

CO_2 Condensing units for refrigerated room.

PACi systems for cooling rooms between 8 °C WB and 24 °C.

* Please refer pages <?>, <?>.

CO_2 transcritical condensing units CR Series

A new addition to the CR Series, the 7,5 kW MT Type offers a wide range of refrigeration systems, meeting the specific needs of small retail stores.

1 Superior efficiency with reliable quality

- Panasonic has combined the 2-stage compressor with the split cycle for increased efficiency
- High seasonal performance. SEPR: Maximum 3,83 in cooling, 1,92 in freezing[1)]
- High COP at high ambient temperature

1) 200VF5.

2 Flexible installation

- Set-points at medium or low temperature available depending on applications
- Compact unit
- Silent operation
- Long piping length: Maximum100 m[2)]
- High external static pressure[2)]
- Transfer pressure control for stable expansion valve control in showcases[2)]

2) 1000VF8/8A.

3 Heat recovery port as renewable energy

- Maximum 16,7 kW of heating for free
- Optional possibility to get subsidy (depending on location)
- Easy connection process

Superior cooling capacity at each evaporating temperature

CO_2 transcritical condensing units have a high cooling capacity at each set point. The CO_2 2-stage compressor developed by Panasonic is designed to compress CO_2 refrigerant twice; it reduces the load in operation by half (compared to 1-stage refrigerant compression) and delivers increased durability and reliability.

Units can be programmed to run at low and medium temperatures at initial set-up. These settings can then be modified by turning a simple and user friendly rotary switch to further enhance energy savings.

MT/LT TYPE
200VF5 - 4 kW / 2 kW

3,83
SEPR COOLING*
1,92
SEPR FREEZING*

MT TYPE
400VF8 - 7,5 kW

NEW
2020

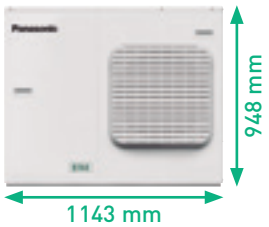

MT TYPE
1000VF8 - 15 kW

MT/LT TYPE
1000VF8A - 16 kW / 8 kW

* SEPR values has been tested at 3-part laboratory.

OCU-CR200VF5(SL)
Cooling capacity (kW)

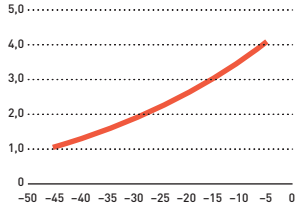

Ambient temperature: 32 °C, 230V, compressor: operation frequency: 65 S^{-1} refrigerant: R744, suction gas temperature: 18 °C.

OCU-CR400VF8(SL)
Cooling capacity (kW)

Coming soon

OCU-CR1000VF8(SL)
Cooling capacity (kW)

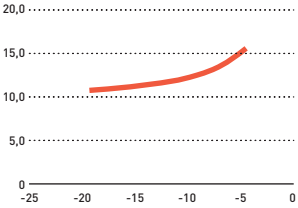

Ambient temperature: 32 °C, 400V, compressor: operation frequency: 60 S^{-1}, refrigerant: R744, suction gas temperature:18 °C.

OCU-CR1000VF8A(SL)
Cooling capacity (kW)

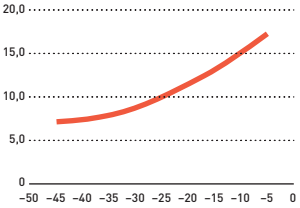

Ambient temperature: 32 °C, 400V, compressor: operation frequency: 60 S^{-1}, refrigerant: R744, suction gas temperature:18 °C.

CR Series	Low temperature	Medium temperature	Heat recovery port	ET (Evaporation Temperature) set points range	Room size example*
OCU-CR200VF5	✔	✔	—	-45 ~ -5 °C	10 m³ / 40 m³
OCU-CR400VF8	—	✔	✔	-20 ~ -5 °C	20 m³
OCU-CR1000VF8	—	✔	—	-20 ~ -5 °C	200 m³
OCU-CR1000VF8A	✔	✔	✔	-45 ~ -5 °C	50 m³ / 200 m³

* Room size is reference. Please contact to authorized Panasonic dealer for calculation.

Technology by Panasonic

Reliable CO_2 technology by Panasonic

- Reliable quality: Made in Japan
- 10000 units sold and installed in 3700 retail operations such as convenience stores and supermarkets in Japan*
- Excellent quality control established by skilled factory team
- Panasonic offers 5 year warranties on compressors and 2 years on components
- The 5 year compressor warranty matches the products long lifespan

* As of the end of November 18.

Panasonic's combined technology of the 2-stage compressor with the split cycle

The video for detailed information is ready!

- Panasonic 2-stage rotary compressor delivering powerful performance for more than 20 years
- Split cycle* enhances cooling effect

* Available for 200VF5 and 1000VF8A models.
** In the case that the standard cycle with 1-stage rotary compressor was compared.

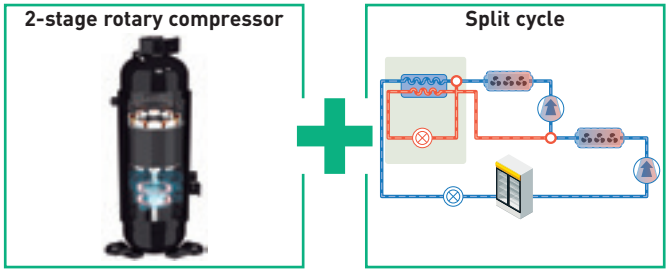

Standard cycle.

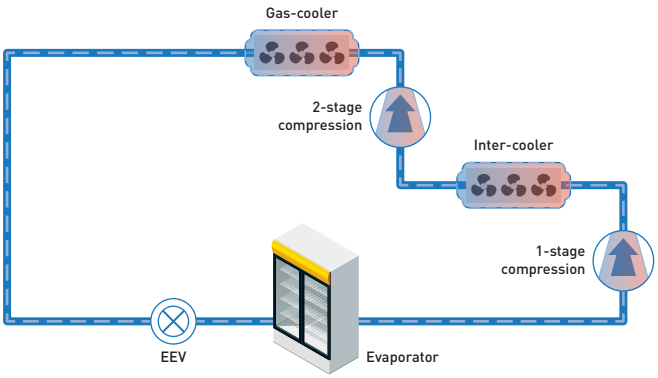

Split cycle.

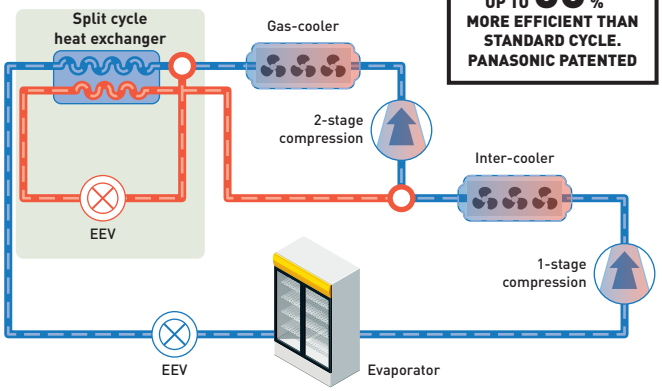

UP TO 50 % MORE EFFICIENT THAN STANDARD CYCLE. PANASONIC PATENTED**

Heat recovery function for heating

This function offers refrigeration combined with heating all in one system. The ground-breaking solution allows for increased opportunity to cut running costs by utilizing exhausted heat from refrigeration and transferring to the energy source for heating.

16,7 KW[1] OF HOT WATER FOR FREE

1) Under the condition: ambient temperature 32 °C, evaporation temperature -10 °C. 100 % Partial load.2) Local supply.

What is heat recovery function?

New solution example.
Heat recovery system can produce both heating and refrigeration.

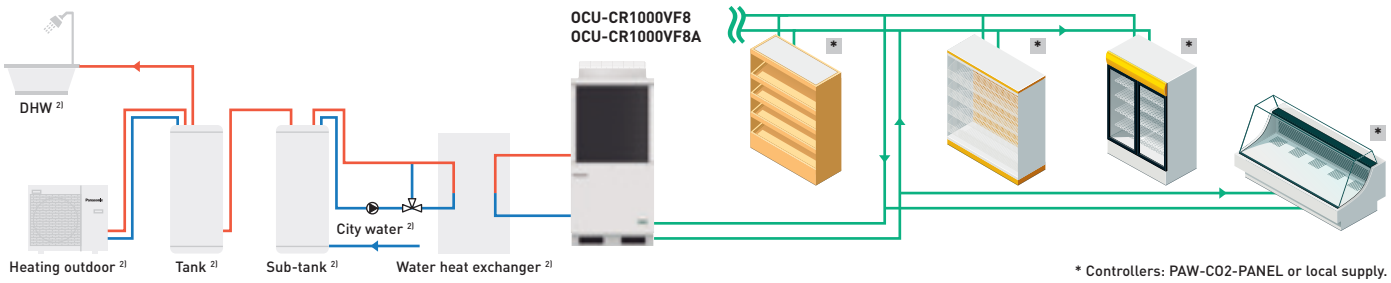

* Controllers: PAW-CO2-PANEL or local supply.

Excellent quality control established by skilled factory team. Reliability is our main target and therefore we offer compressor warranties of 5 years, and 2 year warranties on other components!

Saving installation time with Plug & Play kit

To ensure a quick and easy installation, Panasonic has designed a one box solution that includes the condensing unit, a panel pre-programmed controller, electronic expansion and all required sensors in addition to providing simple instructions.

Panasonic condensing units with natural refrigerant:
The environmentally friendly and reliable solution for convenience stores, supermarket, service stations and cold rooms.

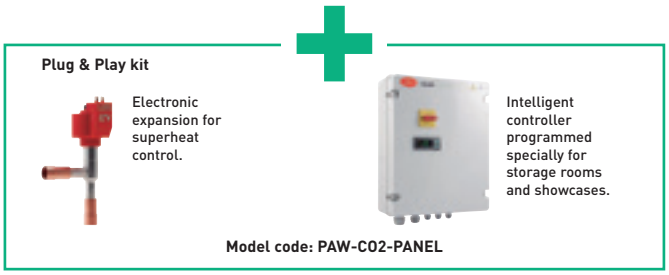

Modbus compatibility with monitoring system

Panasonic CO_2 condensing unit CR Series can be supervised through major monitoring system such as CAREL, Eliwell and Danfoss. Monitoring systems ensure the recording, monitoring and reporting of temperature conditions of entire CO_2 condensing units system.

Monitoring system		
CAREL	Danfoss	eliwell by Schneider Electric
Standard boss & boss-mini	AK-SM Series	TelevisGo

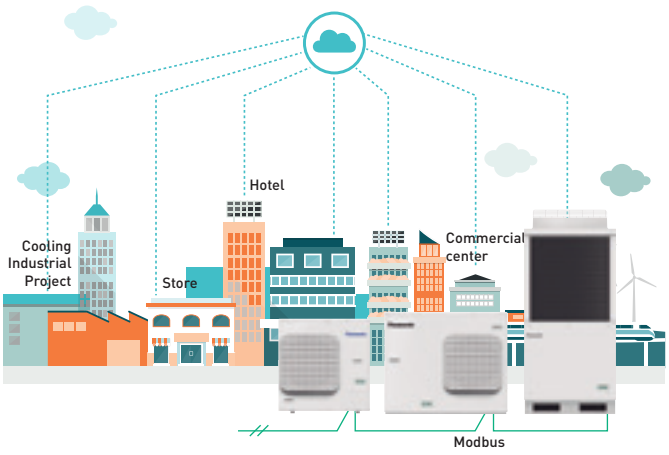

Design support tool available in Panasonic PRO Club

Panasonic has launched a new online calculator to support engineers, installers, and technicians to quickly make calculations when specifying solutions for commercial refrigeration systems. The calculator can be found on Panasonic's PRO Club.

- Evaporation temperature selection
- Cooling capacity calculator
- Refrigerant pipe calculation
- Electronic expansion valves calculation
- Refrigerant amount calculation

Ready to works on all devices, computers, tablets and smartphones!!

PRO Club **www.panasonicproclub.com** or connect simply with your smartphone to the PRO Club using this QR

Range of CO_2 condensing units CR Series

Outdoor units	MT	4,0 kW	7,0 kW	15,0 kW	16,0 kW
	LT	2,0 kW	3,5 kW	7,5 kW	8,0 kW

4 kW MT / LT
(200VF5)

OCU-CR200VF5
OCU-CR200VF5SL

NEW!
7,5 kW MT
(400VF8)

OCU-CR400VF8
OCU-CR400VF8SL

15 kW MT
(1000VF8)

OCU-CR1000VF8
OCU-CR1000VF8SL

16 kW MT / LT
(1000VF8A)

OCU-CR1000VF8A
OCU-CR1000VF8ASL

PAW-CO2-PANEL

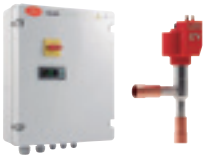

Type (MT: medium temp. LT: low temp.)			MT (4 kW) / LT (2 kW)		NEW MT (7,5 kW)		MT (15 kW)		MT(16 kW) / LT (8 kW)			
Standard model			**OCU-CR200VF5**		**OCU-CR400VF8**		**OCU-CR1000VF8**		**OCU-CR1000VF8A**			
Anti corrosion coating model			**OCU-CR200VF5SL**		**OCU-CR400VF8SL**		**OCU-CR1000VF8SL**		**OCU-CR1000VF8ASL**			
Power supply	Voltage	V	220/230/240		380/400/415		380/400/415		380/400/415			
	Phase		Single Phase		Three Phase		Three Phase		Three Phase			
	Frequency	Hz	50		50		50		50			
Cooling capacity at ET -10 °C AT 32 °C		kW	3,70		6,90		14,00		15,10			
Cooling capacity at ET -35 °C AT 32 °C		kW	1,80		—		—		8,00			
Evaporator connection			Multiple [1]		Multiple [1]		Multiple		Multiple			
Evaporation temperature	Min ~ Max	°C	-45 ~ -5		-20 ~ -5		-20 ~ -5		-45 ~ -5			
Ambient temperature	Min ~ Max	°C	-15 ~ +43		-15 ~ +43		-15 ~ +43		-15 ~ +43			
Refrigerant			R744		R744		R744		R744			
Design pressure liquid line		Mpa	12		8		8		8			
Design pressure suction line		Mpa	8		8		8		8			
User system external alarm. Digital input. Non-voltage contact			Yes		Yes		Yes		Yes			
Liquid tube electromagnetic valve		Vac	220/230/240		380/400/415		220/230/240		220/230/240			
Showcase operation ON/OFF signal. Digital input. Non-voltage contact			Yes		Yes		Yes		Yes			
Modbus communication line (RS485)		Ports	2		2		2		2			
Compressor type			2- stage rotary		2- stage rotary		2- stage rotary		2- stage rotary			
Dimension	H x W x D	mm	930 x 900 x 437		948 x 1143 x 609		1941 x 890 x 890		1941 x 890 x 890			
Net weight		Kg	70		TBC		293		320			
Piping connections	Suction pipe	Inch (mm)	3/8 (9,52)		1/2 (12,70)		3/4 (19,05)		3/4 (19,05)			
	Liquid pipe	Inch (mm)	1/4 (6,35)		3/8 (9,52)		5/8 (15,88)		5/8 (15,88)			
Length of connection piping		m	25		TBC		100 [2]		100 [2]			
Standard performance	Ambient temperature	°C	32		32		32		32			
	Evaporating temperature	°C	-10	-35	-10	-35	-10	-10	-10	-10	-10	-35	-10	-35
	Cooling capacity	kW	3,70	1,80	3,70	1,80	6,90	6,90	14,00	14,00	15,10	8,00	15,10	8,00
	Power consumption	kW	1,79	1,65	1,79	1,65	TBC	TBC	8,20	8,20	8,20	7,57	8,20	7,57
	Nominal load ampere	A	7,94	7,26	7,94	7,26	TBC	TBC	12,60	12,60	12,60	11,60	12,60	11,60
	Sound pressure level	dB(A)	35,5 [3]	35,5 [3]	35,5 [3]	35,5 [3]	TBC	TBC	36,0 [4]	36,0 [4]	36,0 [4]	36,0 [4]	36,0 [4]	36,0 [4]
PED			I		II		II		II			
Air volume		m³/min	54		TBC		220		220			
External static pressure		Pa	17		TBC		58		58			
Heat recovery port			—		Yes		—		Yes			
Drier filter liquid line, diameter 6,35 mm			Included		TBC		—		—			
Drier filter liquid line, diameter 15,88 mm			—		TBC		Included		Included			
Necessary accessories												
Tube connector adaptor for vacuum and service	**SPK-TU125**		Yes (must be ordered)		TBC		Yes (must be ordered)		Yes (must be ordered)			
Suction filter, diameter 19,05 mm (outer diameter welding)	**S-008T**		—		TBC		Yes (must be ordered)		Yes (included: delivered with the unit)			

Accessories	
PAW-CO2-PANEL	Room and superheat control including both panel + expansion valve
SPK-TU125	Tube connector adaptor for vacuum and service

Accessories	
S-008T	Suction filter
PZ-68S (Spare part) [5]	Refrigeration oil

1) Ask salesperson if you make multiple connection. 2) PZ-68S (refrigeration oil) must be added if >50 m. 3) ET-10 °C, 65 S-1, 10 m from product. 4) ET -10 °C, 60 S-1, 10 m from product. 5) Please consult with authorized Panasonic dealers.

SPK-TU125
Tube connector adaptor for vacuum and service.

S-008T
Suction filter, diameter 19,05 mm (outer diameter welding).

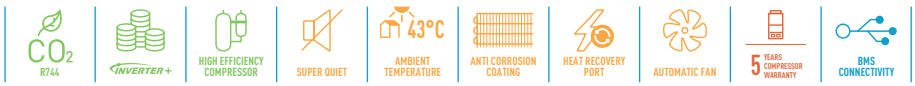

Dimensions

Aquarea All in One H Generation

Front view

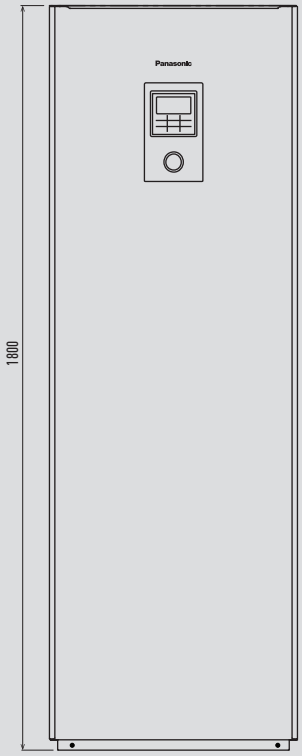

Side view

Top view

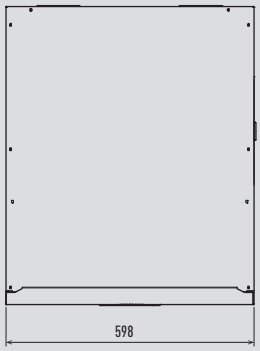

Bottom view

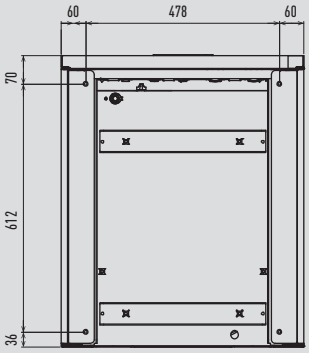

Unit: mm

Aquarea All in One J Generation

Front view

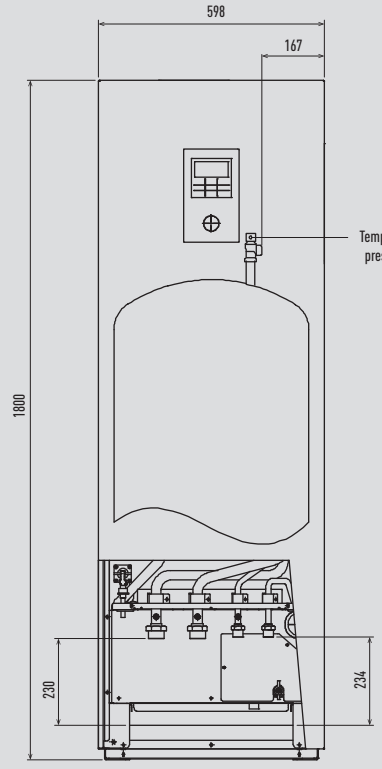

Temperature and pressure relief valve

Side view

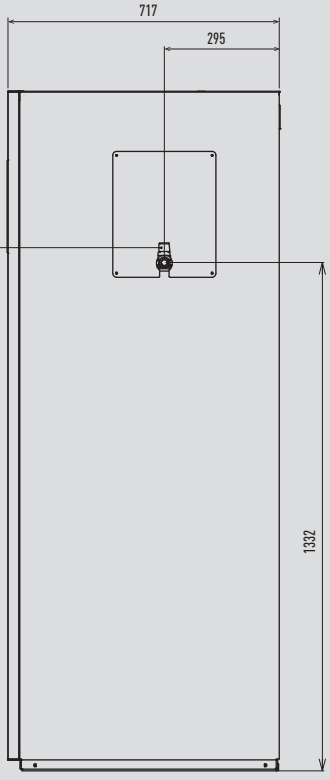

Top view

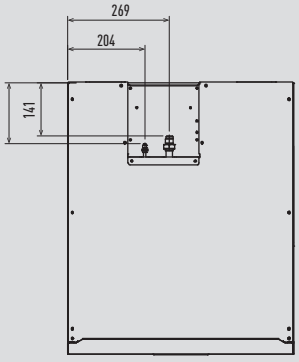

Bottom view

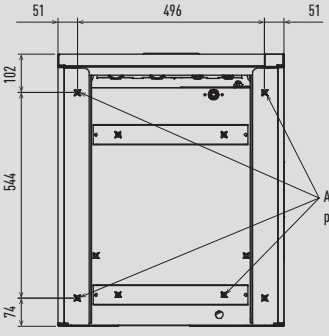

Adjustable Feet [1] position

Unit: mm

Aquarea Hydraulic Module J and H Generation

Side view

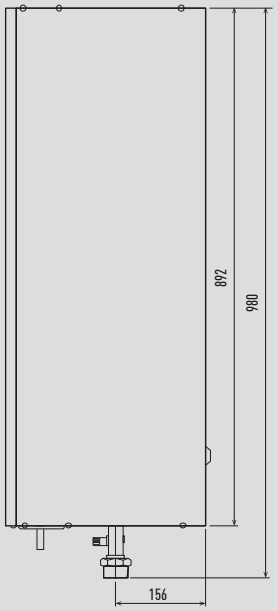

Front view

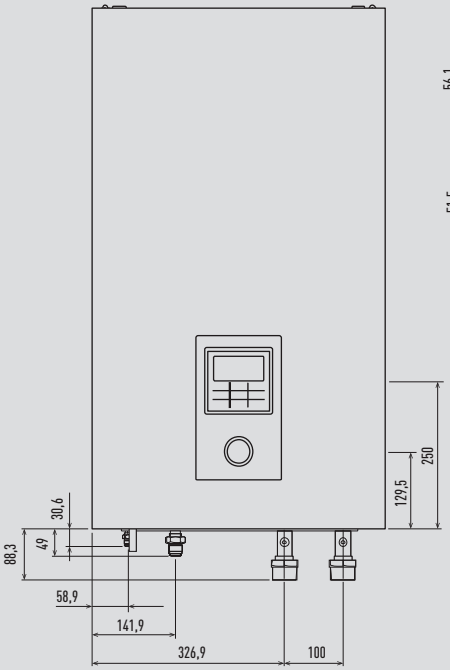

Bottom view

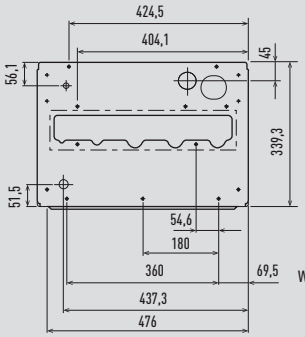

Top view

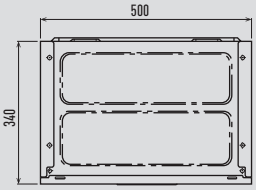

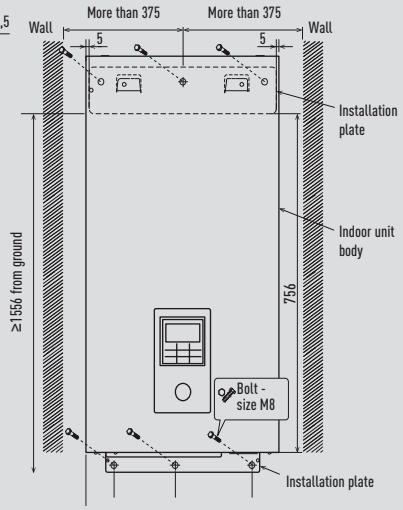

Unit: mm

Aquarea Hydraulic Module F Generation

Side view

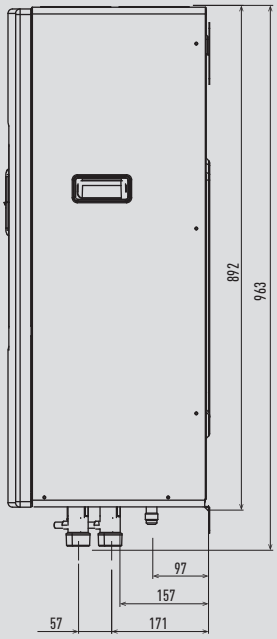

Front view

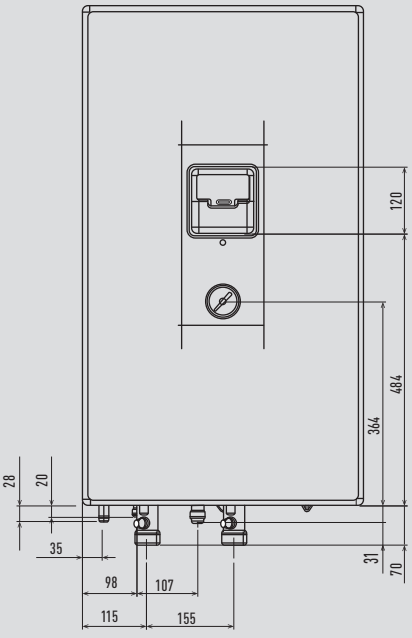

Bottom view

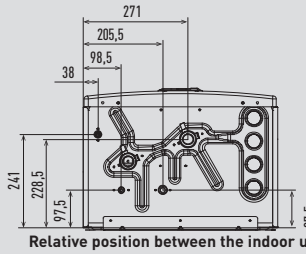

Relative position between the indoor unit and the installation plate front view.

Top view

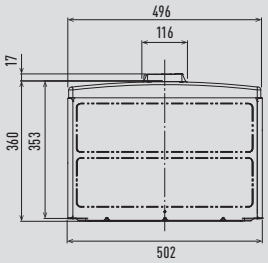

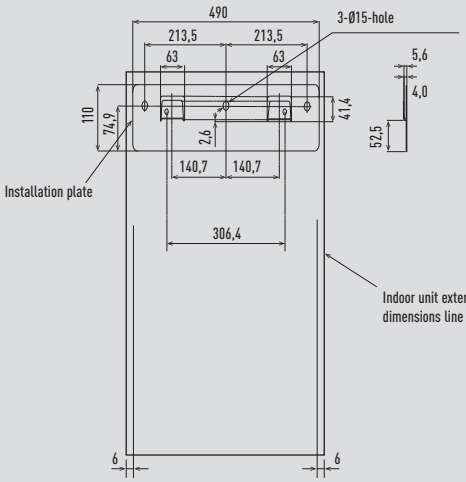

Unit: mm

Aquarea High Performance Bi-bloc outdoor unit 3 and 5kW

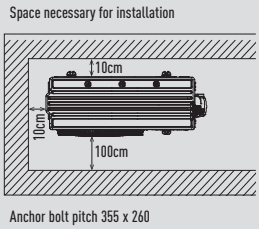

Top view

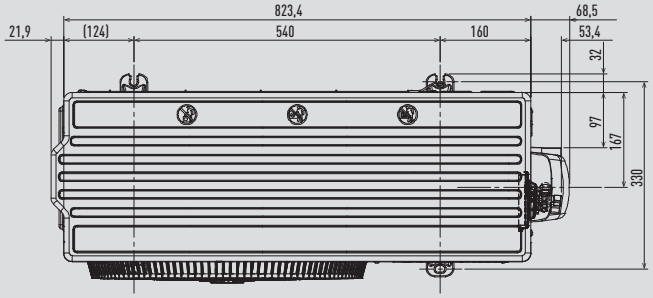

Side view

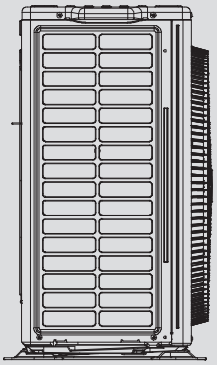

Front view

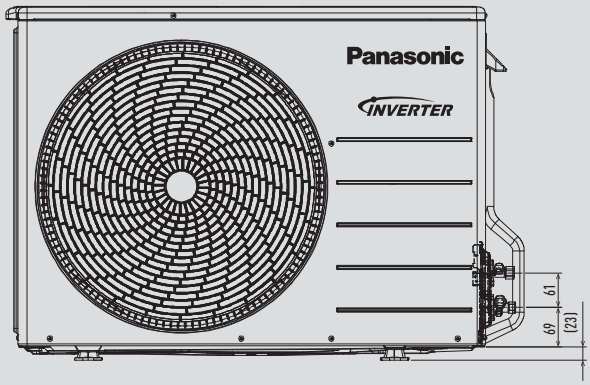

Side view

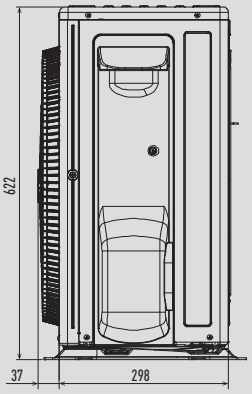

Unit: mm

Aquarea High Performance Bi-bloc outdoor unit 7 and 9kW

Top view

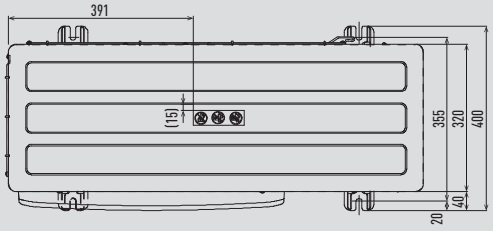

Side view

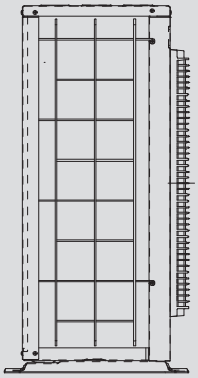

Front view

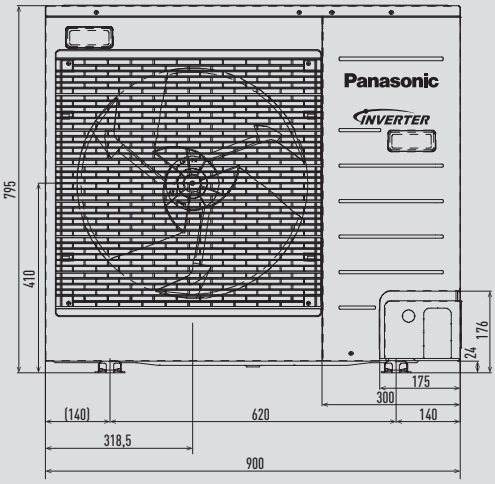

Side view

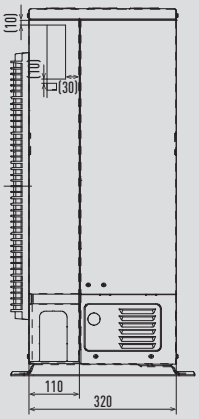

Back View

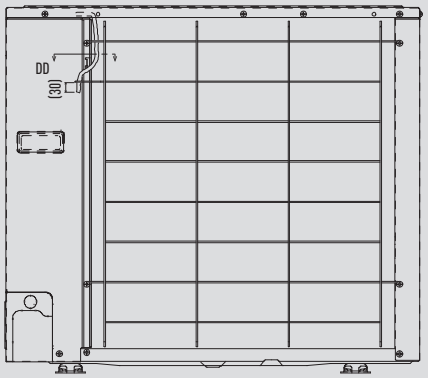

Unit: mm

Aquarea High Performance, T-CAP and HT Bi-bloc outdoor unit from 9 to 16kW

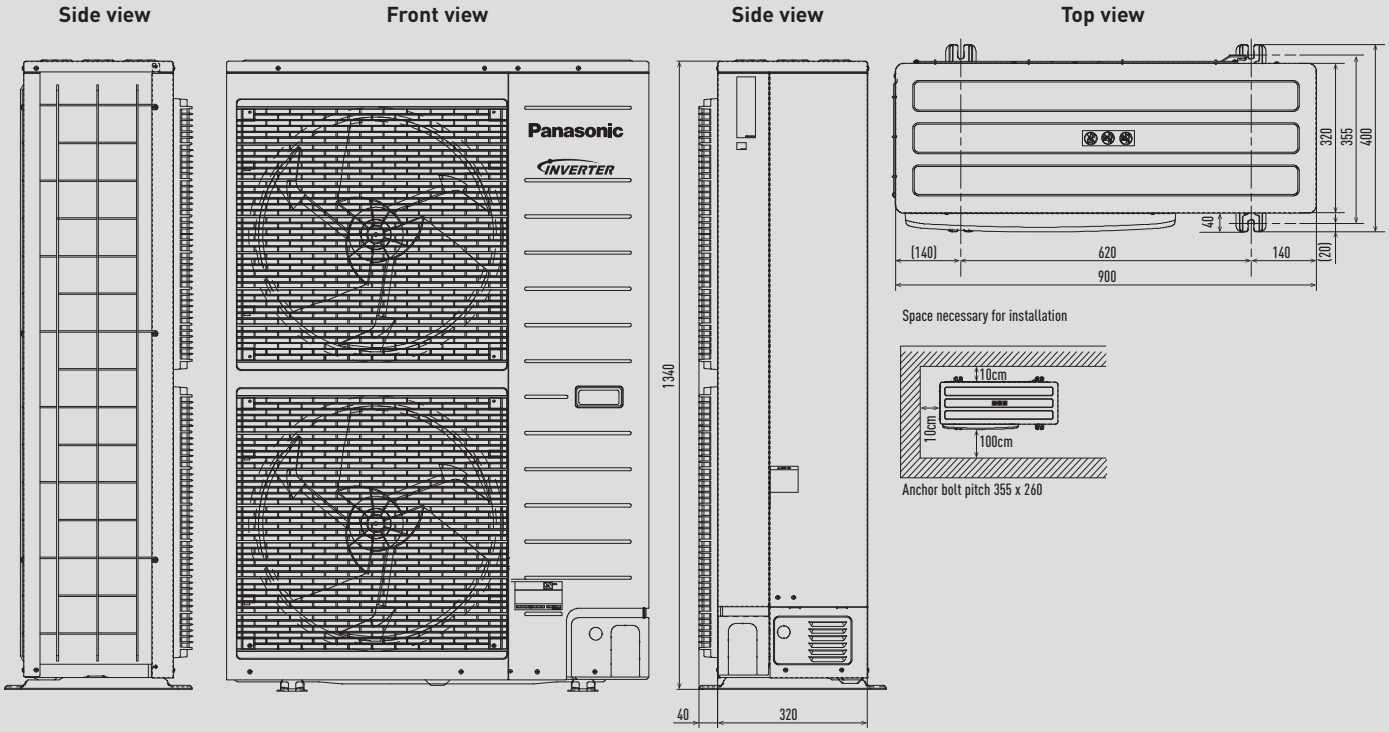

Unit: mm

Aquarea High Performance Mono-bloc outdoor unit J and H Generation from 5 to 9kW

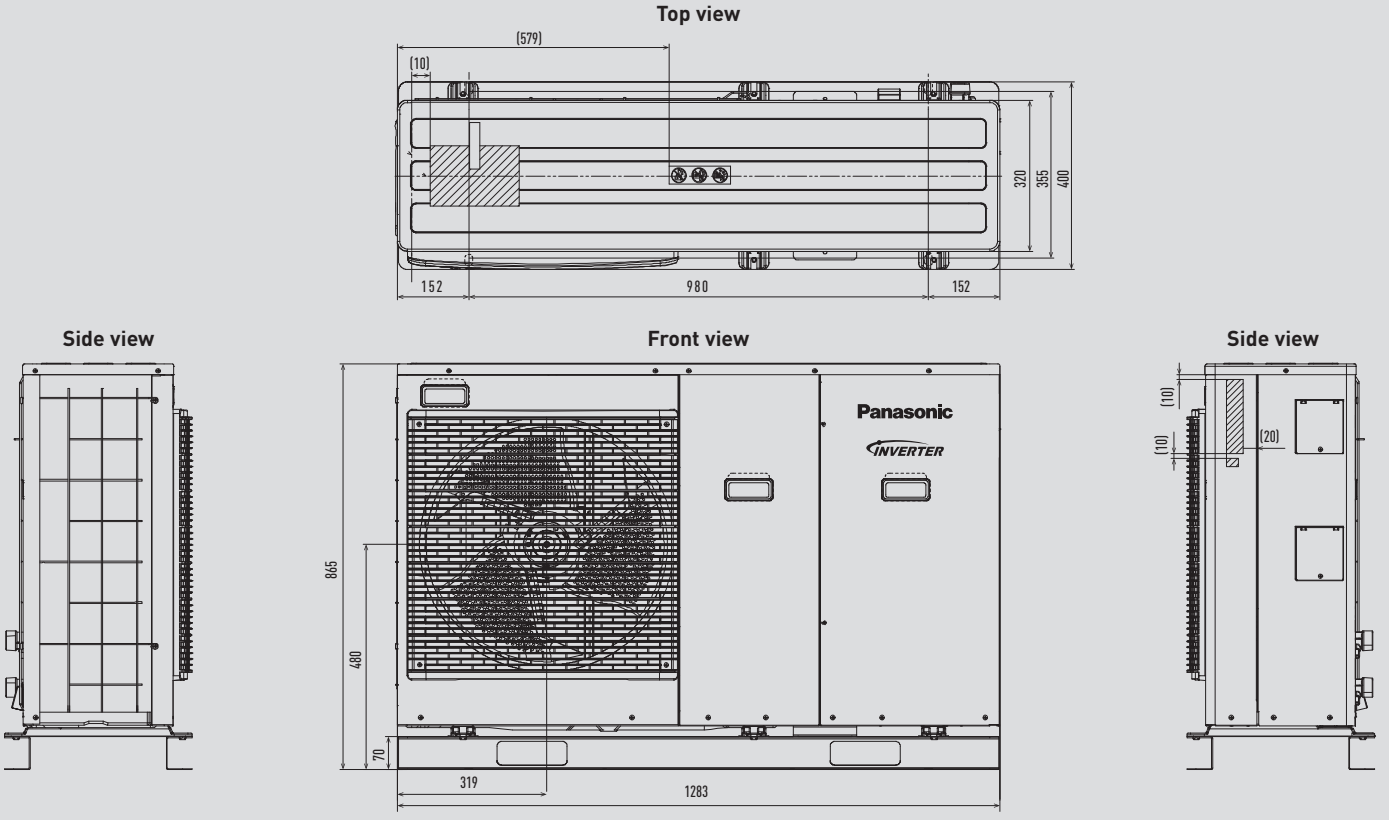

Unit: mm

Aquarea High Performance and T-CAP Bi-bloc Super Quiet outdoor unit and Mono-bloc outdoor unit from 9 to 16kW

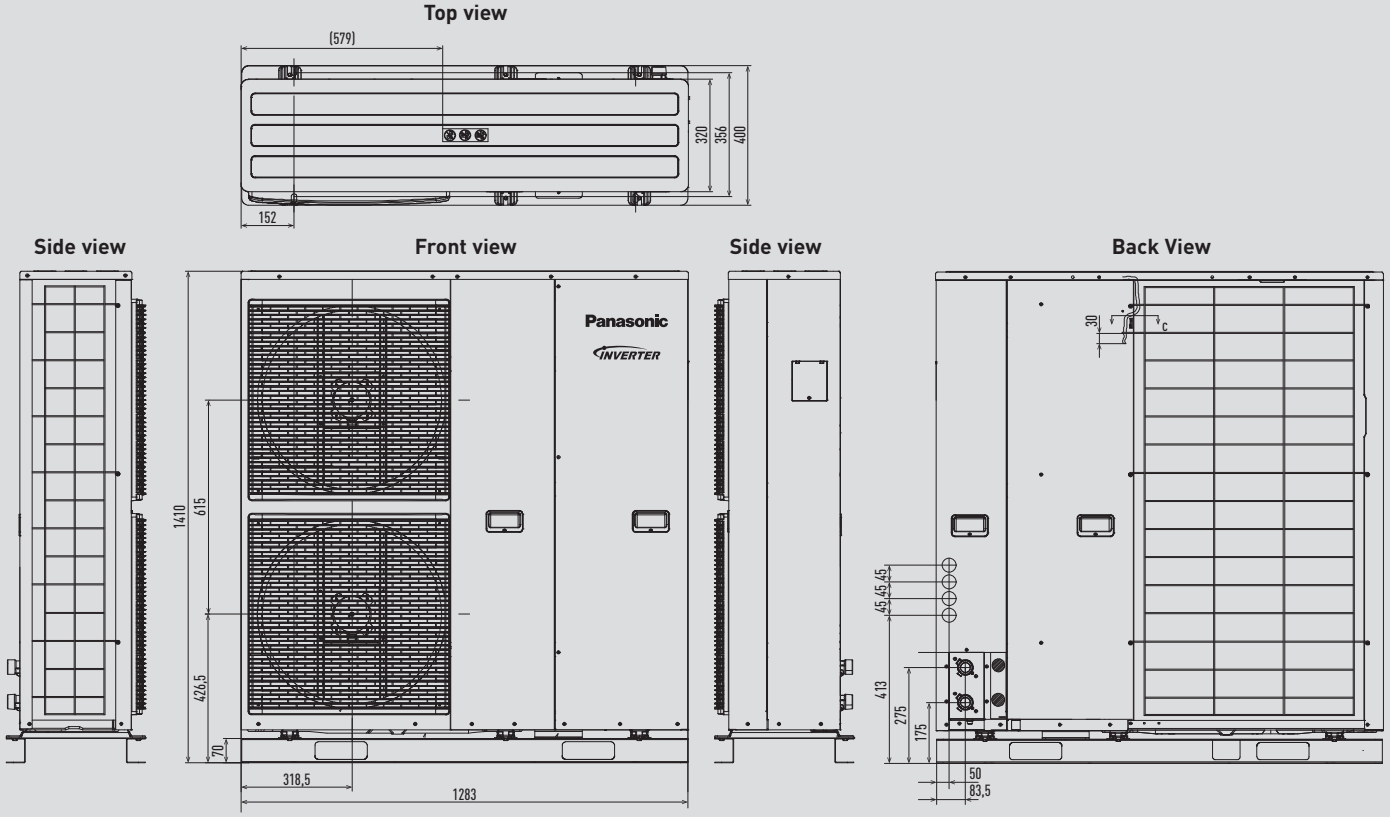

Unit: mm

DHW Stand Alone

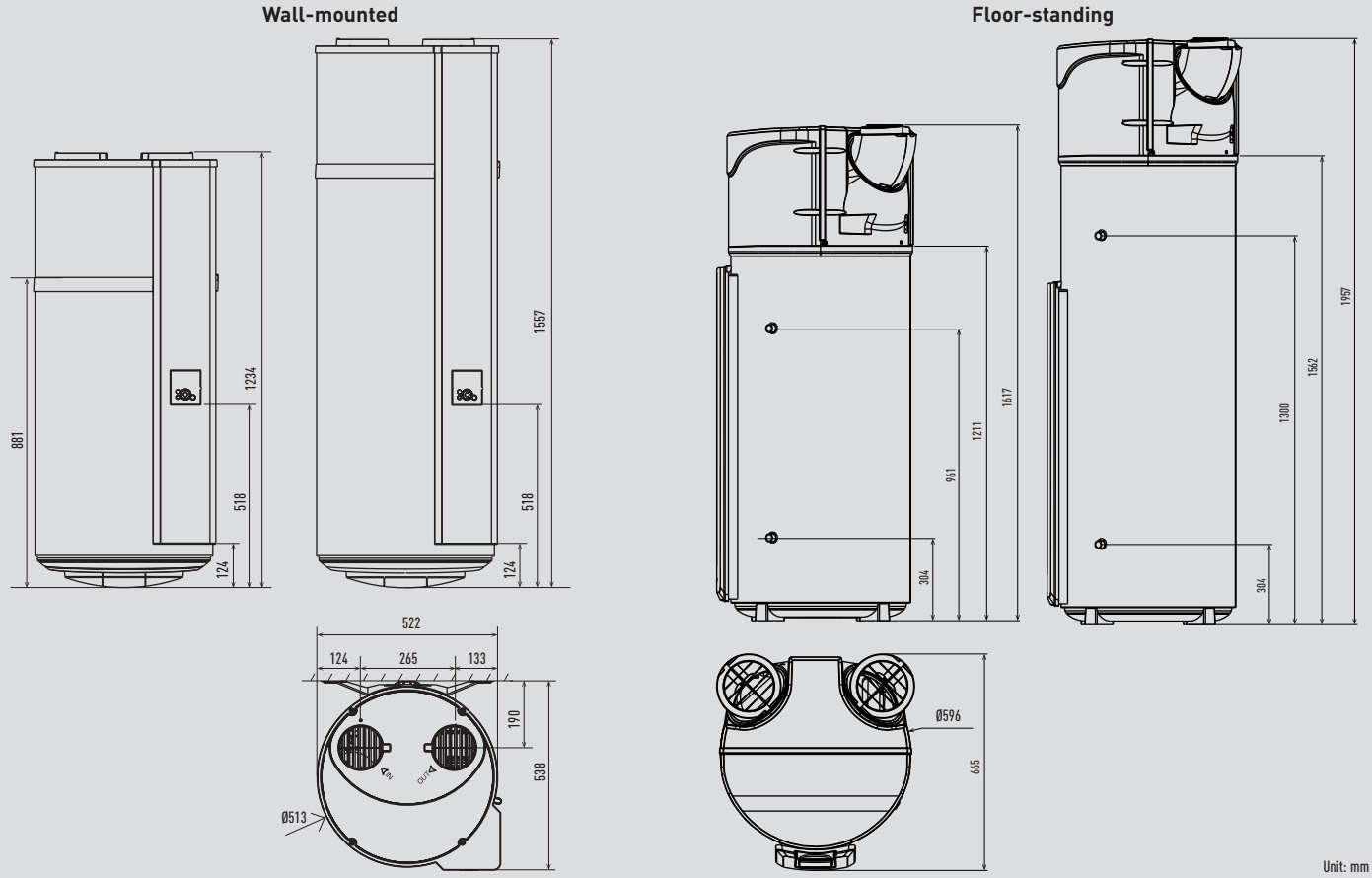

Unit: mm

Fan coils

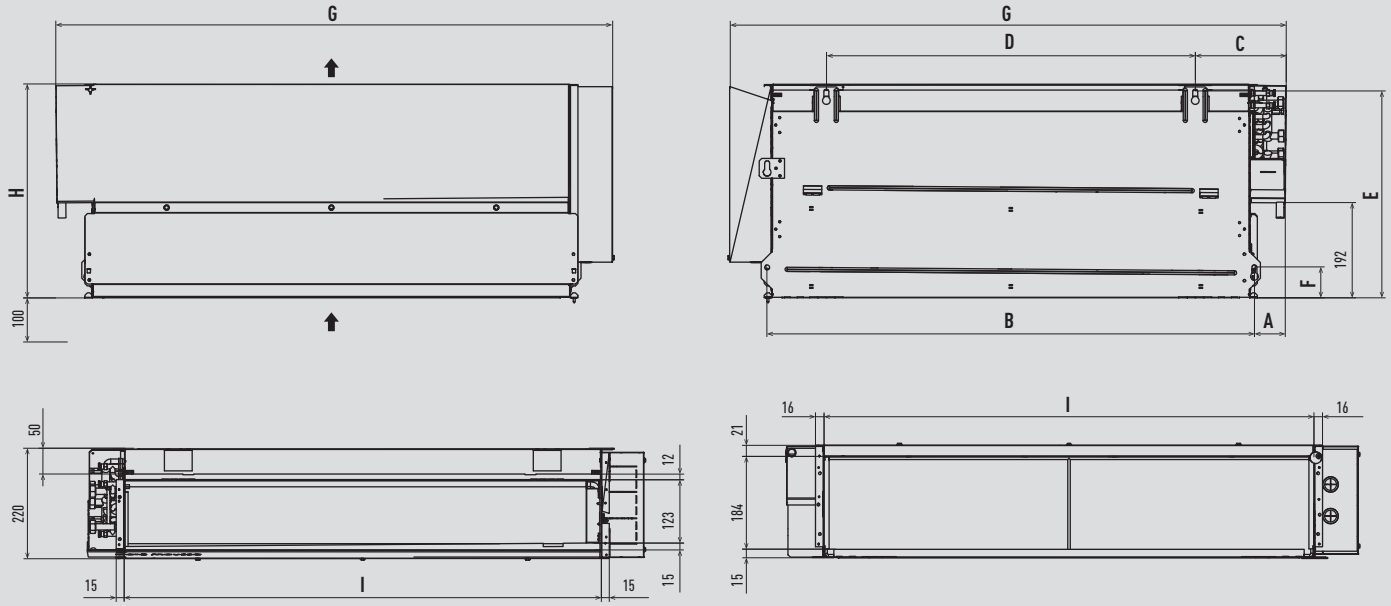

Left side connection	Right side connection	A	B	C	D	E	F	G	H	I
PAW-FC-D11-1	PAW-FC-D11-1-R	66,5	428	185,5	189	415,5	61	569,5	430	407
PAW-FC-D15-1	PAW-FC-D15-1-R	66,5	428	185,5	189	415,5	61	569,5	430	407
PAW-FC-D24-1	PAW-FC-D24-1-R	64	613	184	374	415,5	61	753	430	592
PAW-FC-D28-1	PAW-FC-D28-1-R	64	798	184	559	415,5	61	938	430	777
PAW-FC-D40-1	PAW-FC-D40-1-R	63	983	183	744	415,5	61	1122	430	962
PAW-FC-D55-1	PAW-FC-D55-1-R	63	1168	183	929	415,5	61	1307	430	1147
PAW-FC-D65-1	PAW-FC-D65-1-R	63	983	195	744	519	88	1121	530	962
PAW-FC-D90-1	PAW-FC-D90-1-R	69	1168	195	929	519	86	1316	530	1147

PAW-FC-H150 / PAW-FC-H150-R

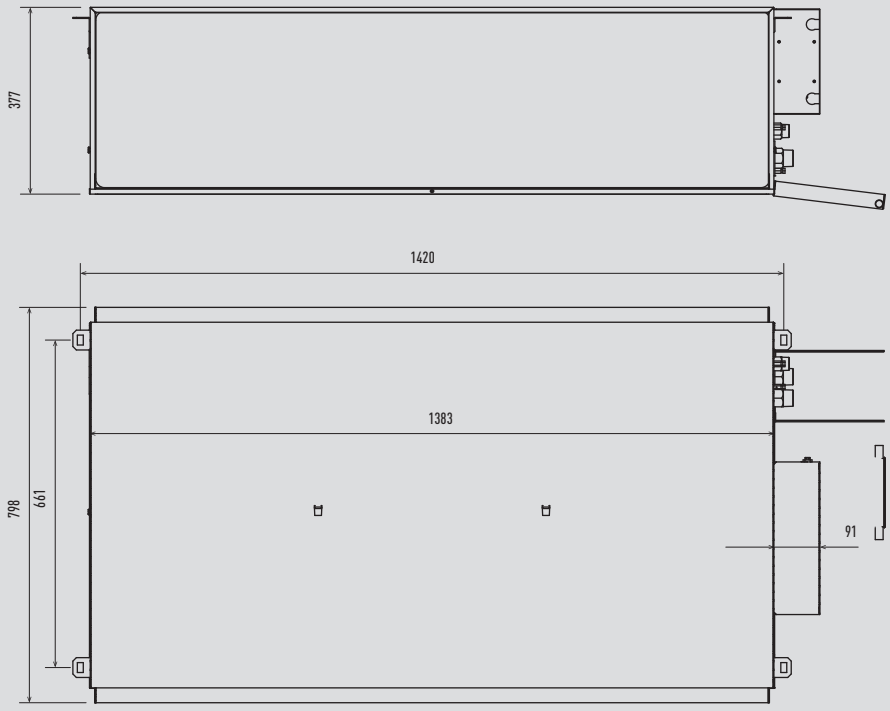

Unit: mm

Wall Mounted TKEA

CS-Z25TKEA / CS-Z35TKEA

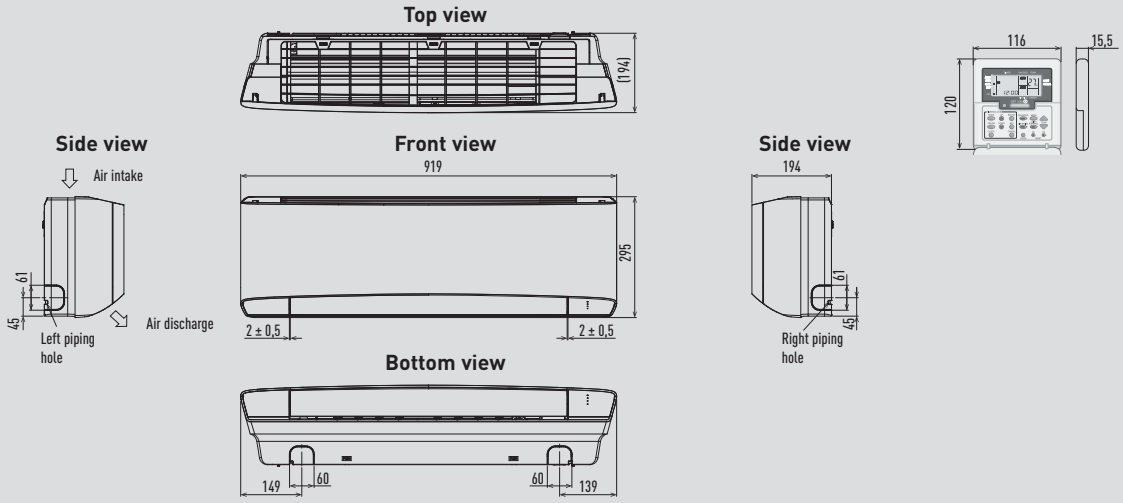

CS-Z42TKEA / CS-Z50TKEA / CS-Z71TKEA

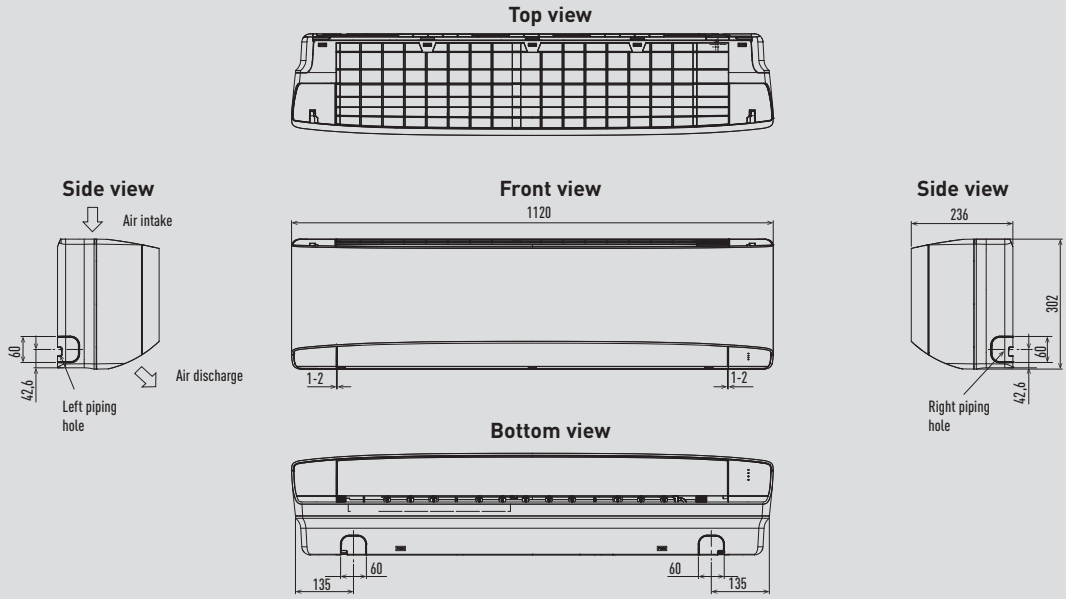

CU-Z25TKEA / CU-Z35TKEA / CU-Z42TKEA

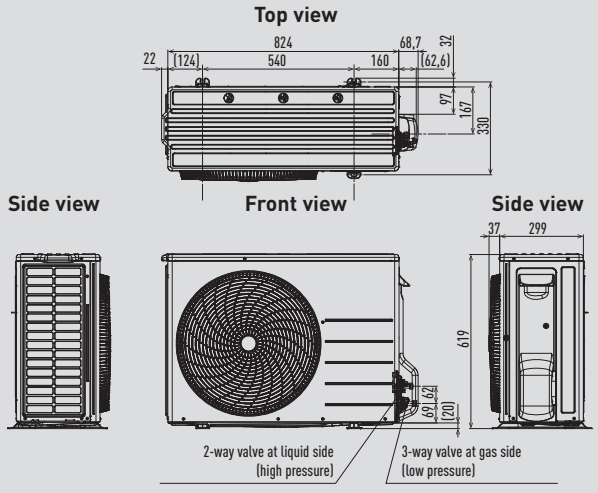

CU-Z50TKEA / CU-Z71TKEA

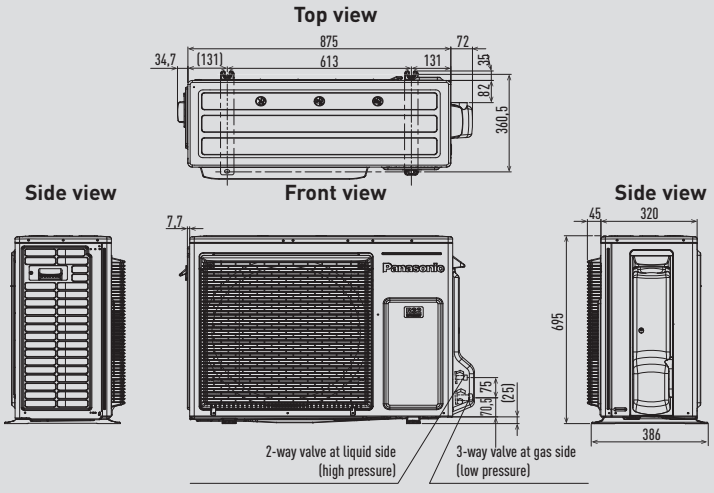

Unit: mm

Wall Mounted PKEA

CS-E9PKEA / CS-E12PKEA

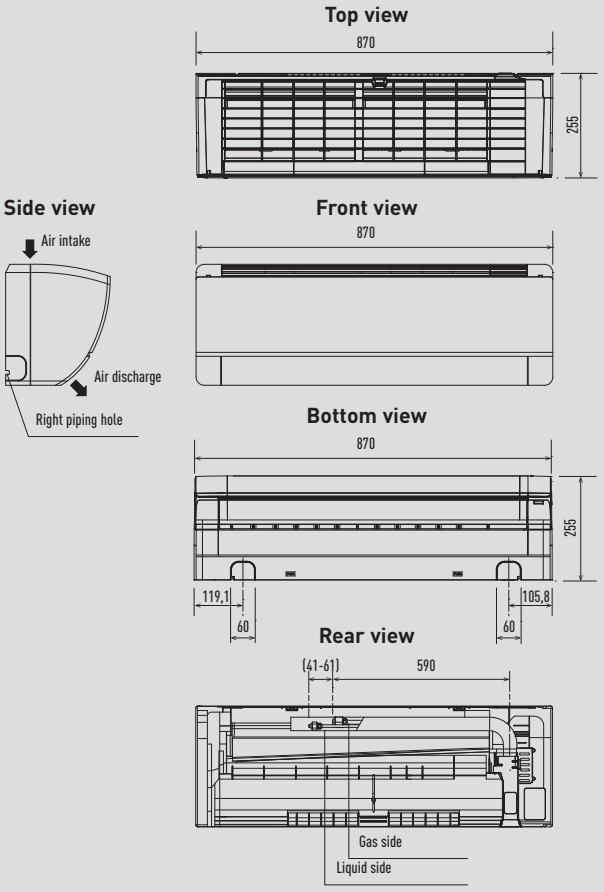

CS-E15PKEA / CS-E18PKEA

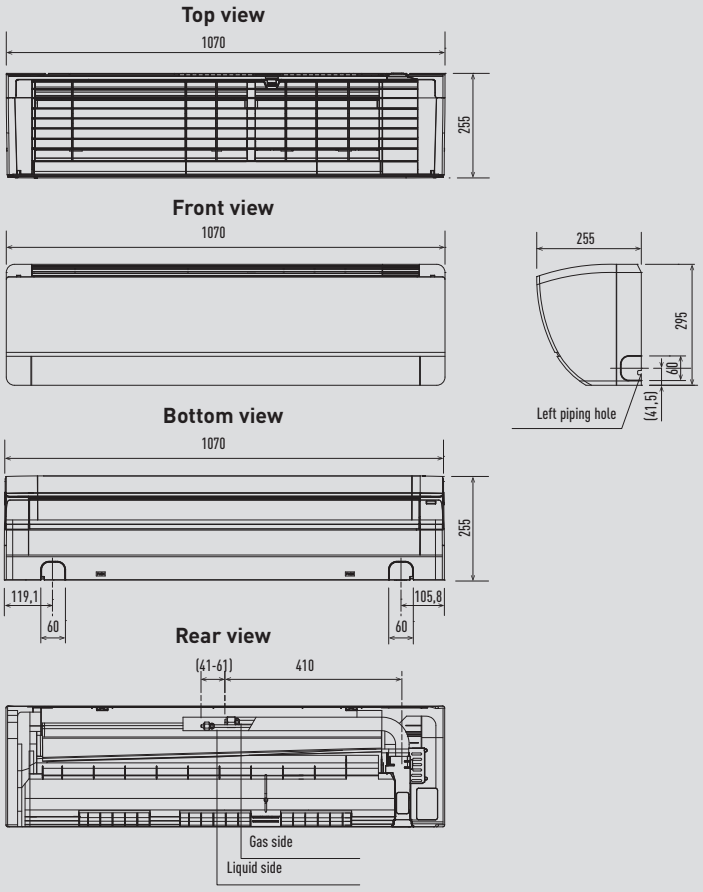

CU-E9PKEA / CU-E12PKEA

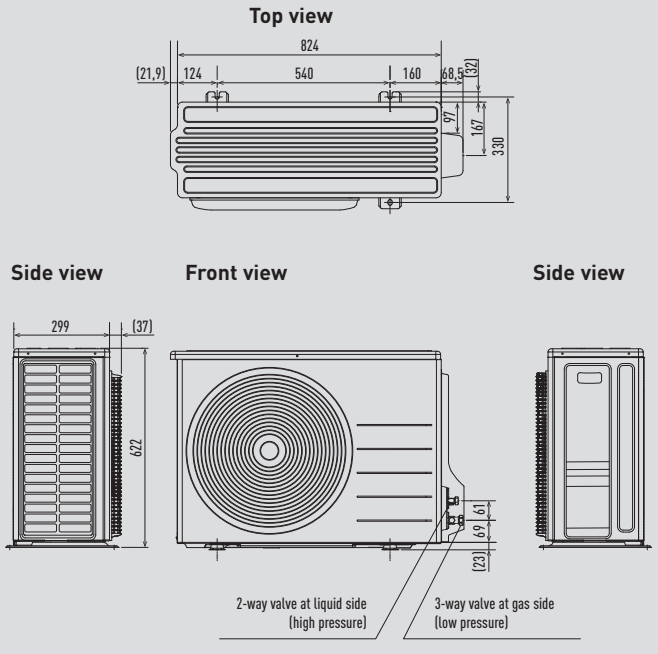

CU-E15PKEA / CU-E18PKEA

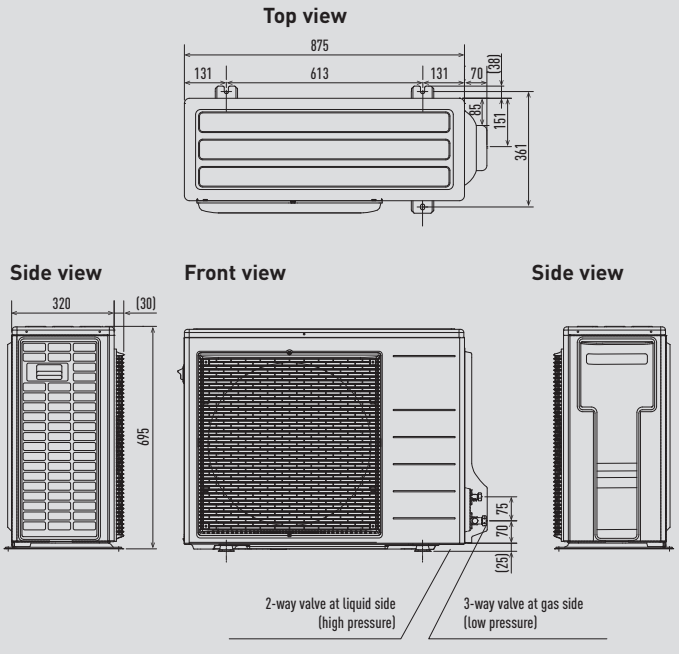

Unit: mm

PACi Wall Mounted

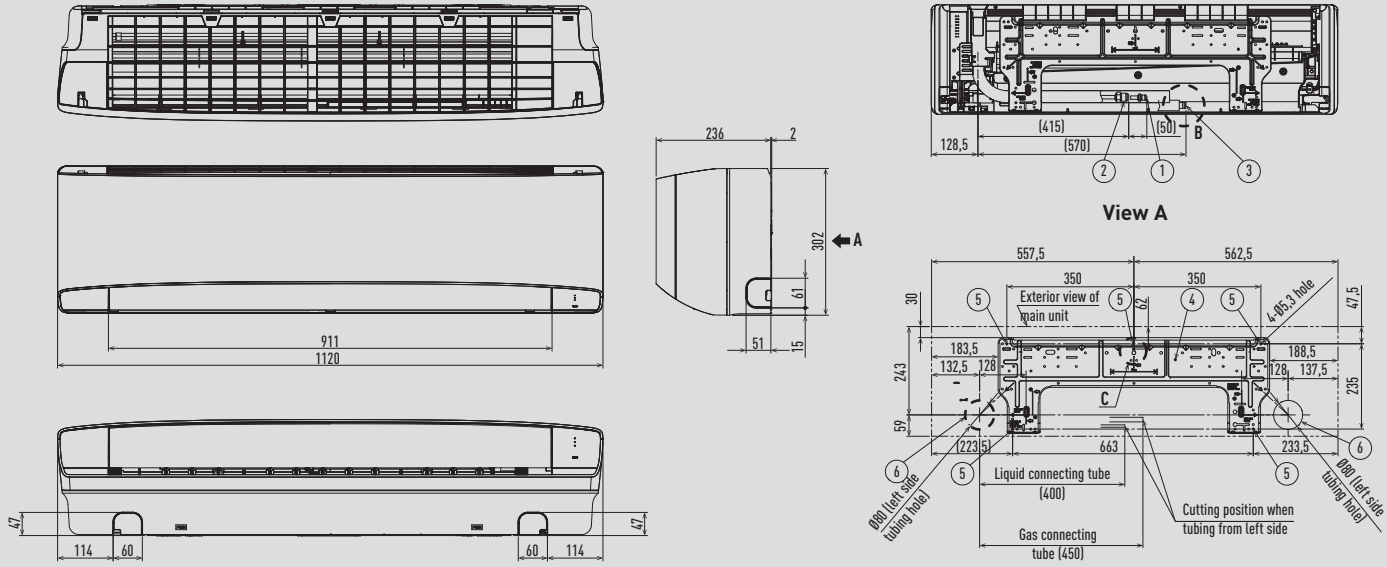

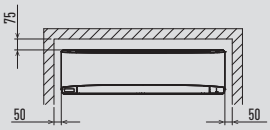

Minimum space requirements for installation

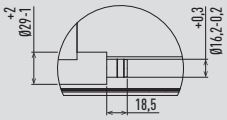

Detailed view B

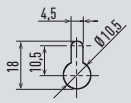

Detailed view C

Type		36-50	60-100
1	Refrigerant tubing (liquid)	Ø6,35 (flared)	Ø9,52 (flared)
2	Refrigerant tubing (gas)	Ø12,70 (flared)	Ø15,88 (flared)
3	Drain hose		
4	Rear panel		
5	Rear panel fixing holes (Ø5,3 holes or as shown in figure "C")		
6	Tubing and wiring holes (Ø80)		

Unit: mm

PACi 4-Way 60x60 Cassette

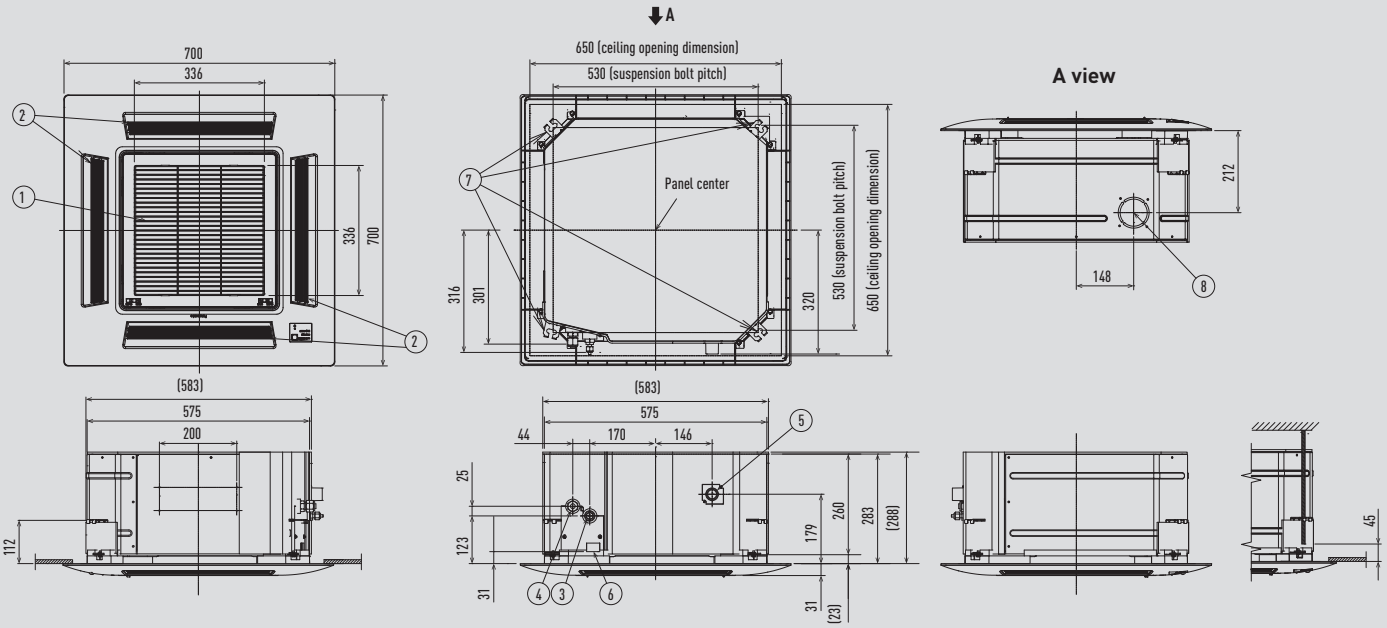

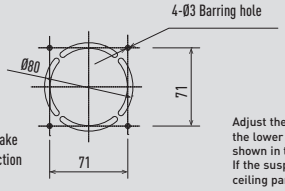

Dimension of fresh air intake duct (field supply) connection port

Adjust the suspension bolt length so that the gap from the lower ceiling surface becomes 45 mm or more, as shown in the figure at right.
If the suspension bolts is too long, it will contact the ceiling panel and the unit cannot be installed.

1	Air intake	
2	Discharge outlet	
3	Refrigerant tubing (liquid)	Ø6,35 (flared)
4	Refrigerant tubing (gas)	Ø12,70 (flared)
5	Drain tube connection port VP25	Outer diameter Ø32
6	Power supply port	
7	Suspension bolt hole	4-11 x 26 hole
8	Fresh air intake duct connection port	Ø80

Unit: mm

PACi 4 Way 90x90 Cassette

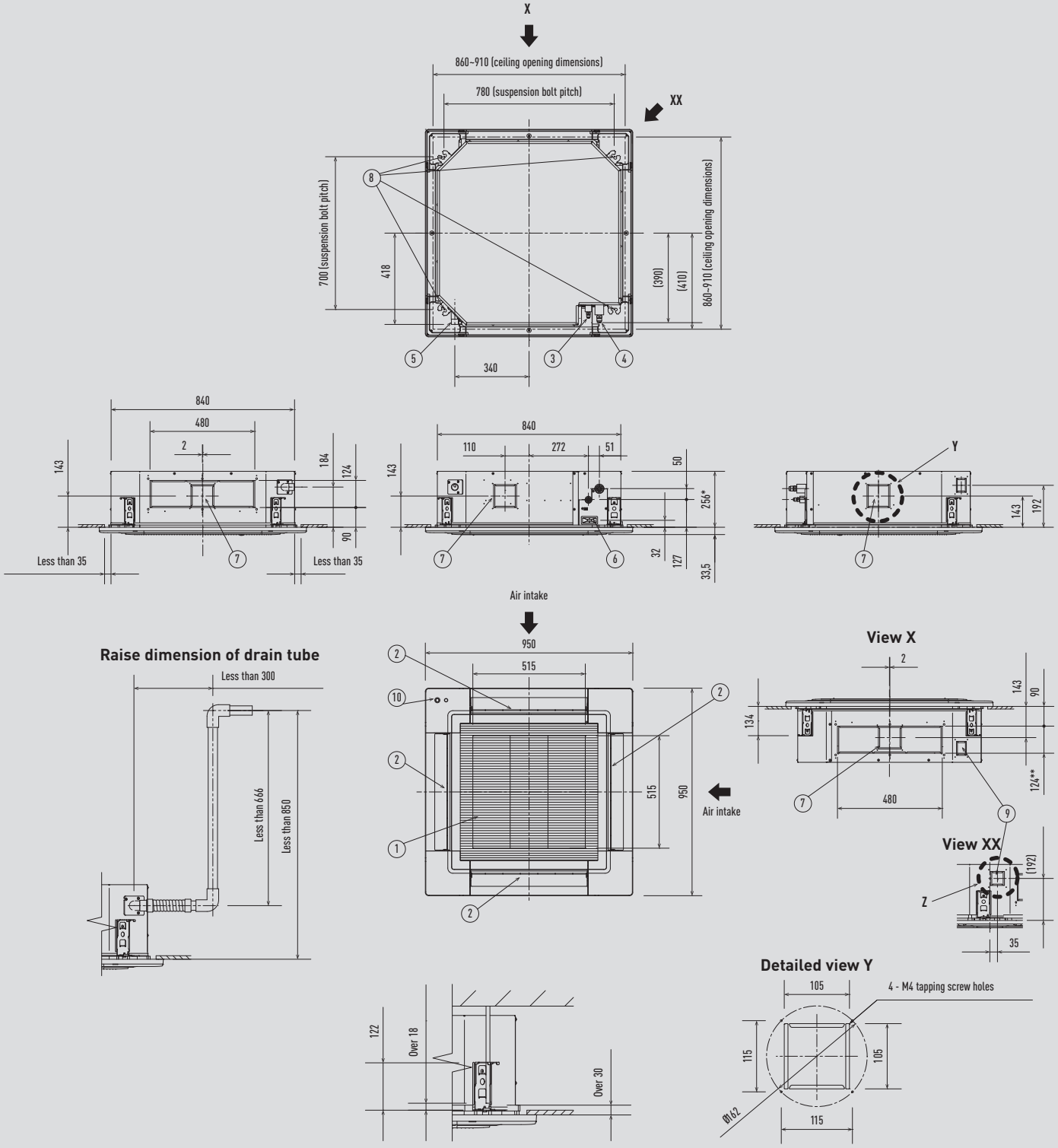

The length of the suspension bolts should be selected so that there is a gap of 30 mm or more below the lower surface of the ceiling (18 mm or more below the lower surface of the main unit), as shown in the figure at right. If the suspension bolt is too long, it will contact the ceiling panel and the unit cannot be installed.
Filter dimension: 520 x 520 x 15 mm.

* 319 mm for S-100PU2E5B / S-125PU2E5B / S-140PU2E5B.
** 187 mm for S-100PU2E5B / S-125PU2E5B / S-140PU2E5B.

Type		36-50	60-140
1	Air intake		
2	Discharge outlet		
3	Refrigerant tubing (liquid)	Ø6,35 (flared)	Ø9,52 (flared)
4	Refrigerant tubing (gas)	Ø12,70 (flared)	Ø15,88 (flared)
5	Drain tube connection port VP25	Outer diameter Ø32	
6	Power supply port		
7	Suspension bolt hole	4-12x30 elongated hole	
8	Fresh air intake duct connection port	Ø100 [1]	
9	Suspension bolt hole	4-12x30 elongated hole	
10	Econavi sensor (CZ-KPU3A or CZ-KPU3AW)		

1) Necessary to attach duct connecting flange(field supplied).

Unit: mm

PACi Ceiling

S-36PT2E5B / S-45PT2E5B / S-50PT2E5B

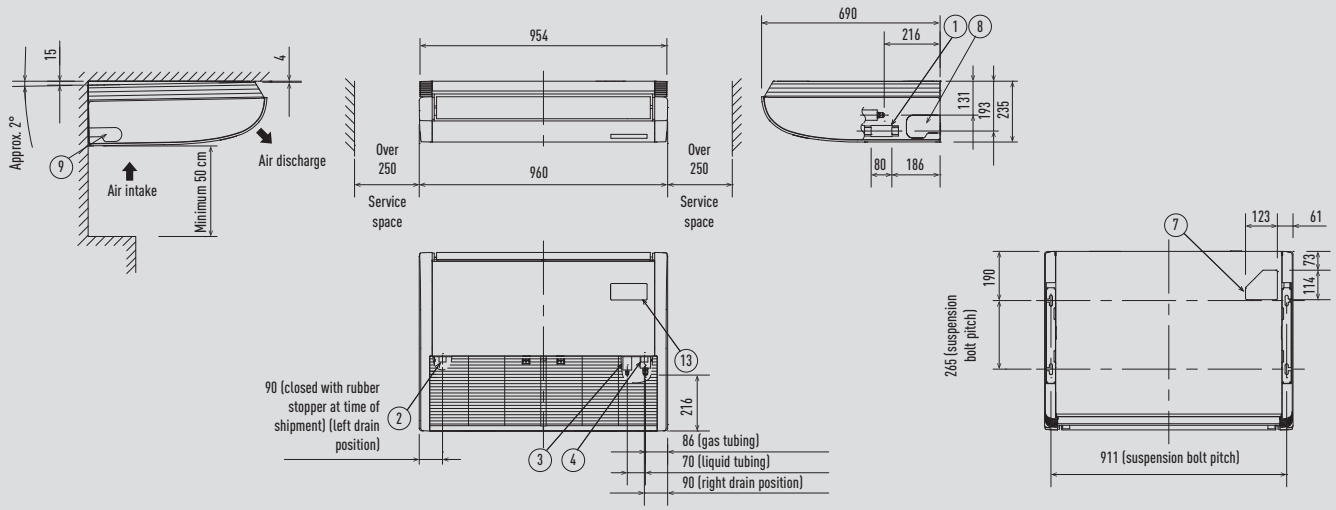

S-60PT2E5B / S-71PT2E5B

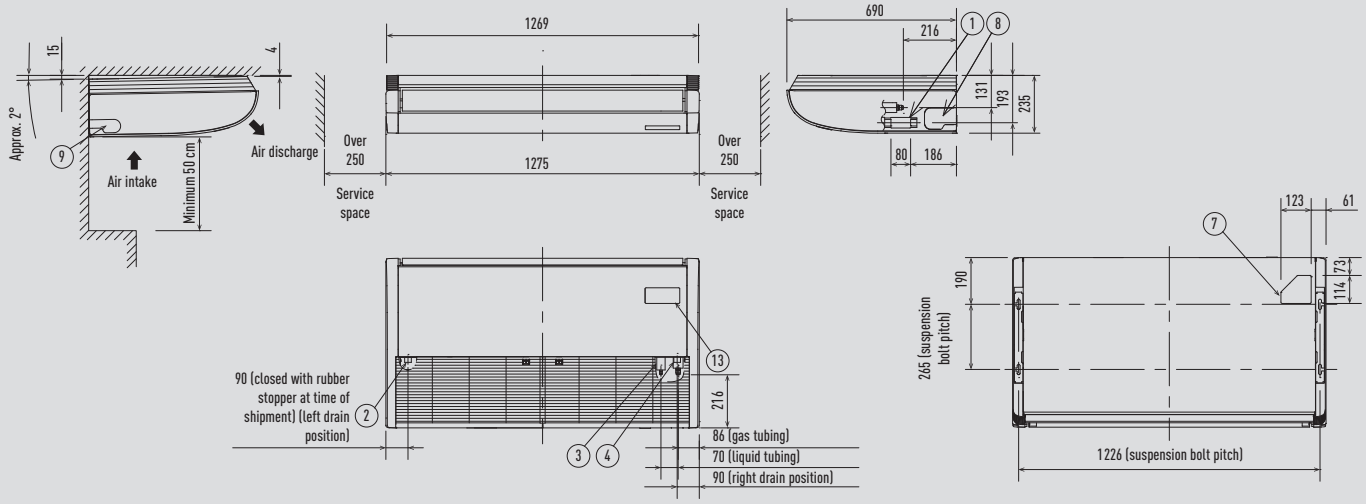

S-100PT2E5B / S-125PT2E5B / S-140PT2E5B

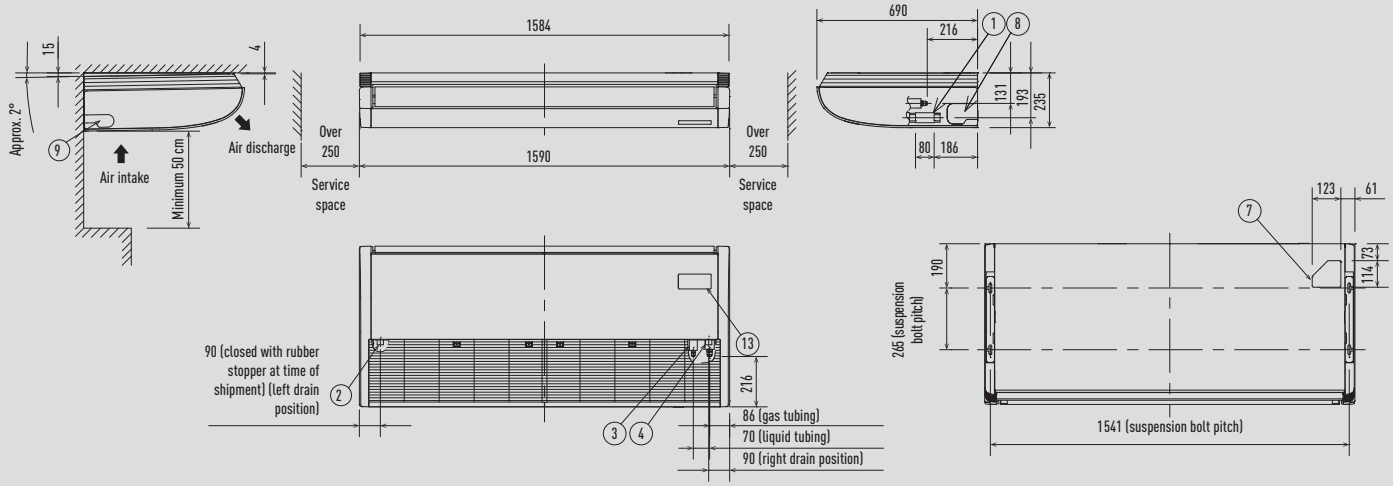

1	Drain tube connection port VP20	Inside diameter Ø26 mm, drain hose supplied
2	Left drain position	
3	Refrigerant tubing (liquid)	Ø9,52 (flared)
4	Refrigerant tubing (gas)	Ø15,88 (flared)
5	Left side drain hose outlet port (cut out)	

6	Tubing hole on wall surface	Ø100 mm
7	Upper side tubing port	
8	Right side drain hose outlet port (cut out)	
9	Wireless remote controller receiver installation location	

Unit: mm

PACi High Static Pressure Hide Away

S-36PF1E5B / S-45PF1E5B / S-50PF1E5B

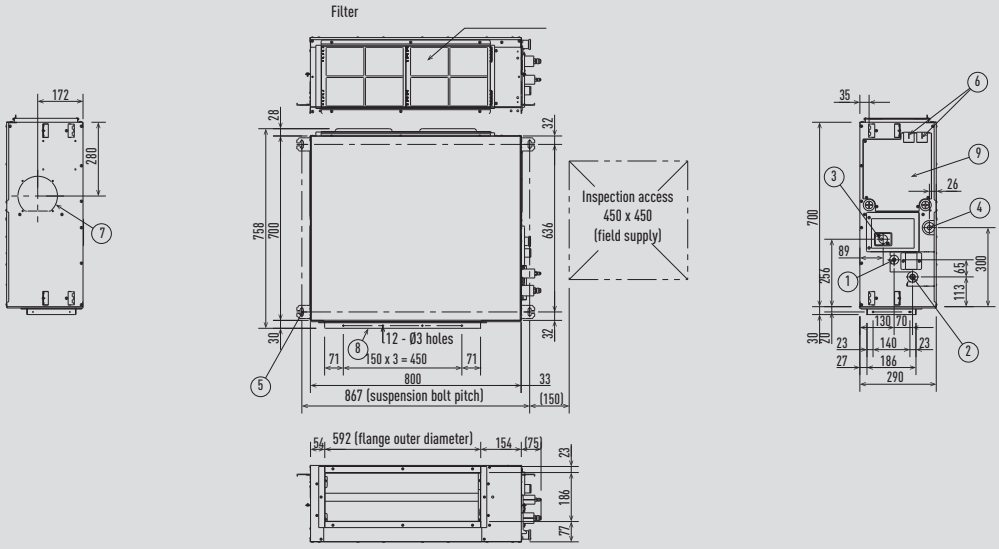

S-60PF1E5B / S-71PF1E5B

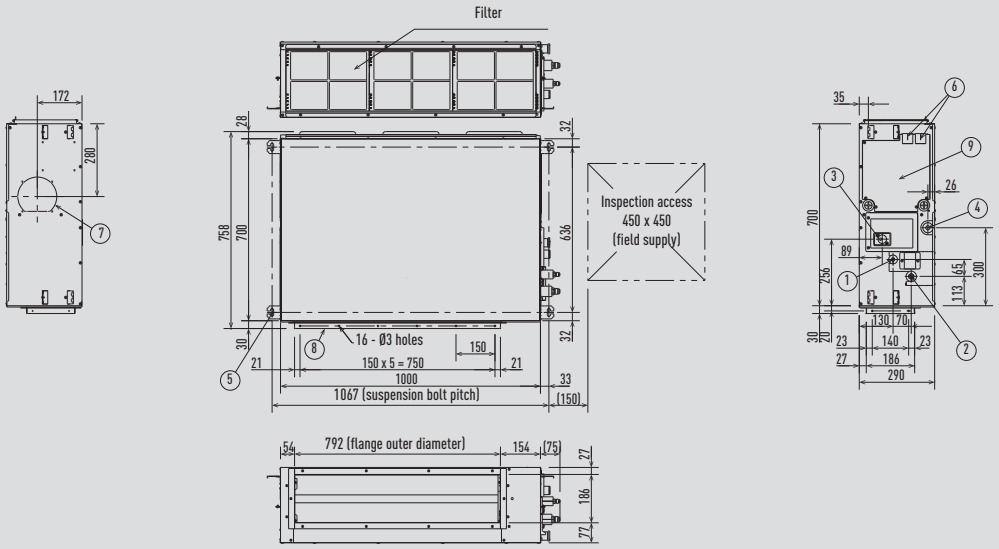

S-100PF1E5B / S-125PF1E5B / S-140PF1E5B

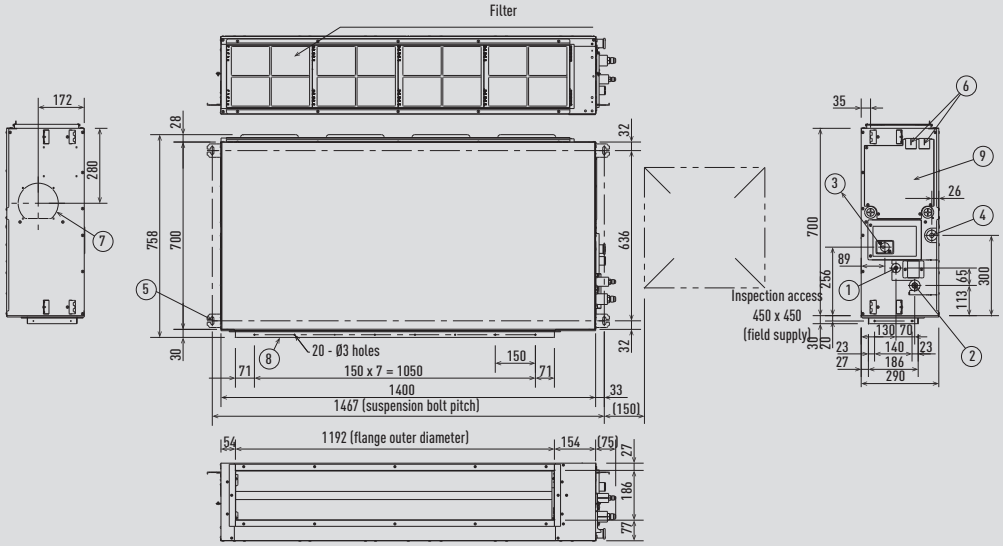

Type		36-50	60-140
1	Refrigerant tubing (liquid)	Ø6,35 (flared)	Ø9,52 (flared)
2	Refrigerant tubing (gas)	Ø12,70 (flared)	Ø15,88 (flared)
3	Upper drain tube connection port VP25	Outer diameter Ø32 mm ⨍ 200 flexible hose supplied	
4	Bottom drain tube connection port VP25	Outer diameter Ø32 mm	
5	Suspension lug	4-12 x 30 mm	

Type		36-50	60-140
6	Power supply outlet		
7	Fresh air intake port	Ø150 mm	
8	Flange for flexible air discharge duct		
9	Electrical component box		

Unit: mm

PACi Low Static Pressure Hide Away

S-36PN1E5A / S-45PN1E5A / S-50PN1E5A

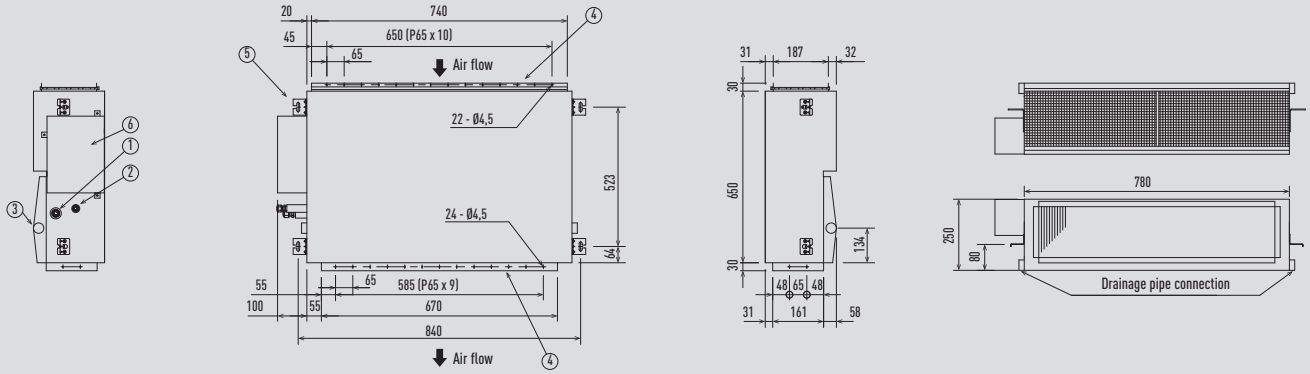

S-60PN1E5A / S-71PN1E5A

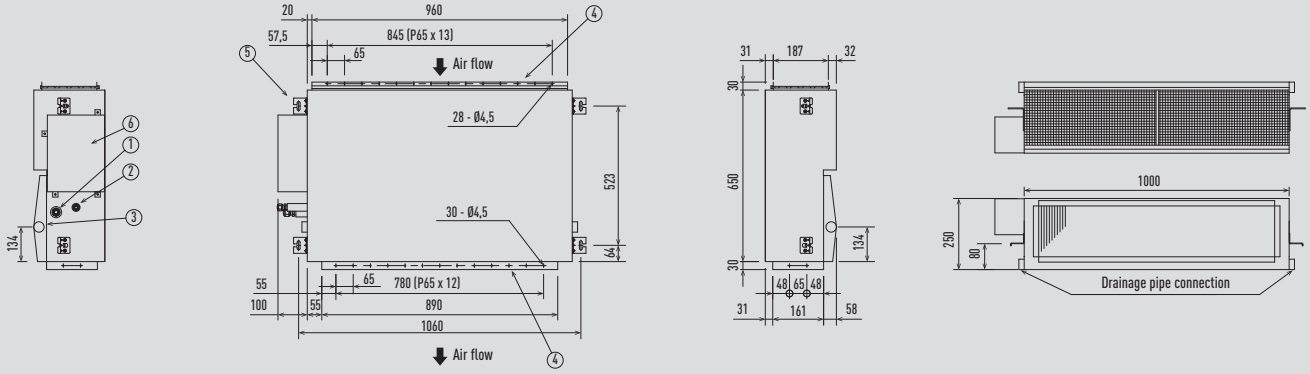

S-100PN1E5A / S-125PN1E5A / S-140PN1E5A

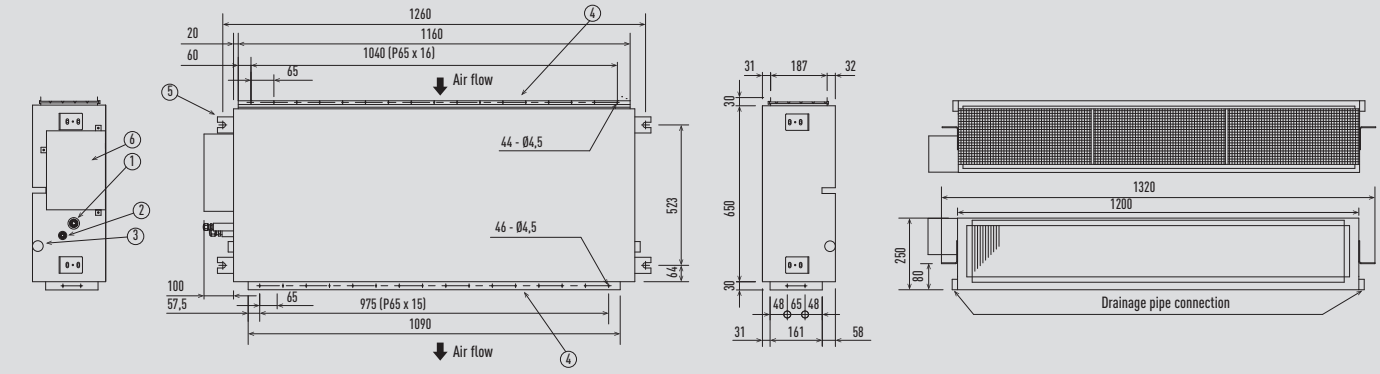

Type		36-50	60-140
1	Refrigerant tubing (liquid)	Outer diameter Ø12,70 (flared)	Outer diameter Ø15,88 (flared)
2	Refrigerant tubing (gas)	Outer diameter Ø6,35 (flared)	Outer diameter Ø9,52 (flared)
3	Drainage pipe connection	Female screw PT1"	
4	Duct connection		
5	Hanger		
6	Control box		

Unit: mm

PACi High Static Pressure Hide Away 20,00-25,00kW

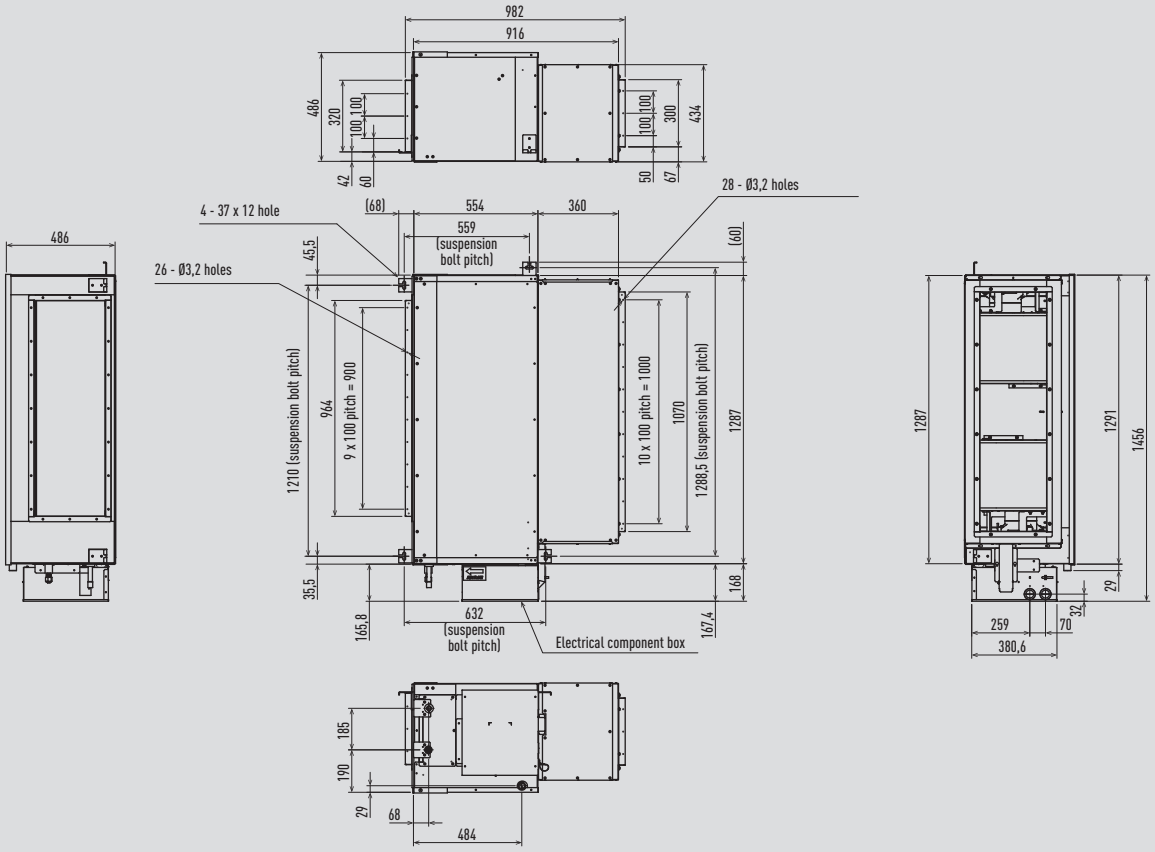

Unit: mm

PACi R32 outdoor unit: small 1 fan

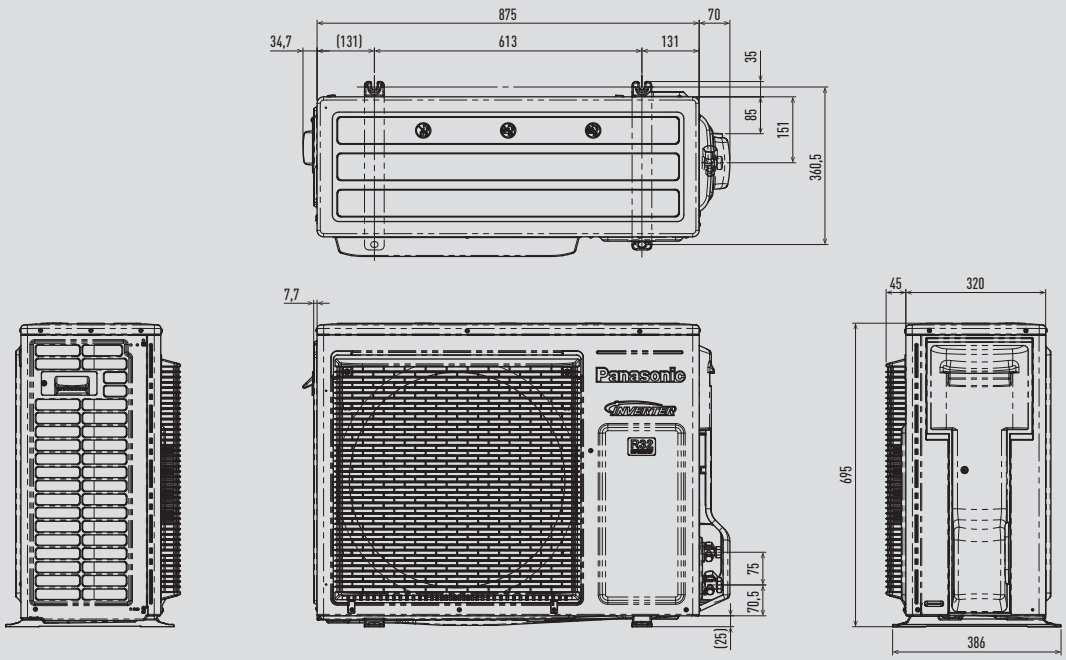

Unit: mm

PACi Elite R32 outdoor unit: medium 1 fan

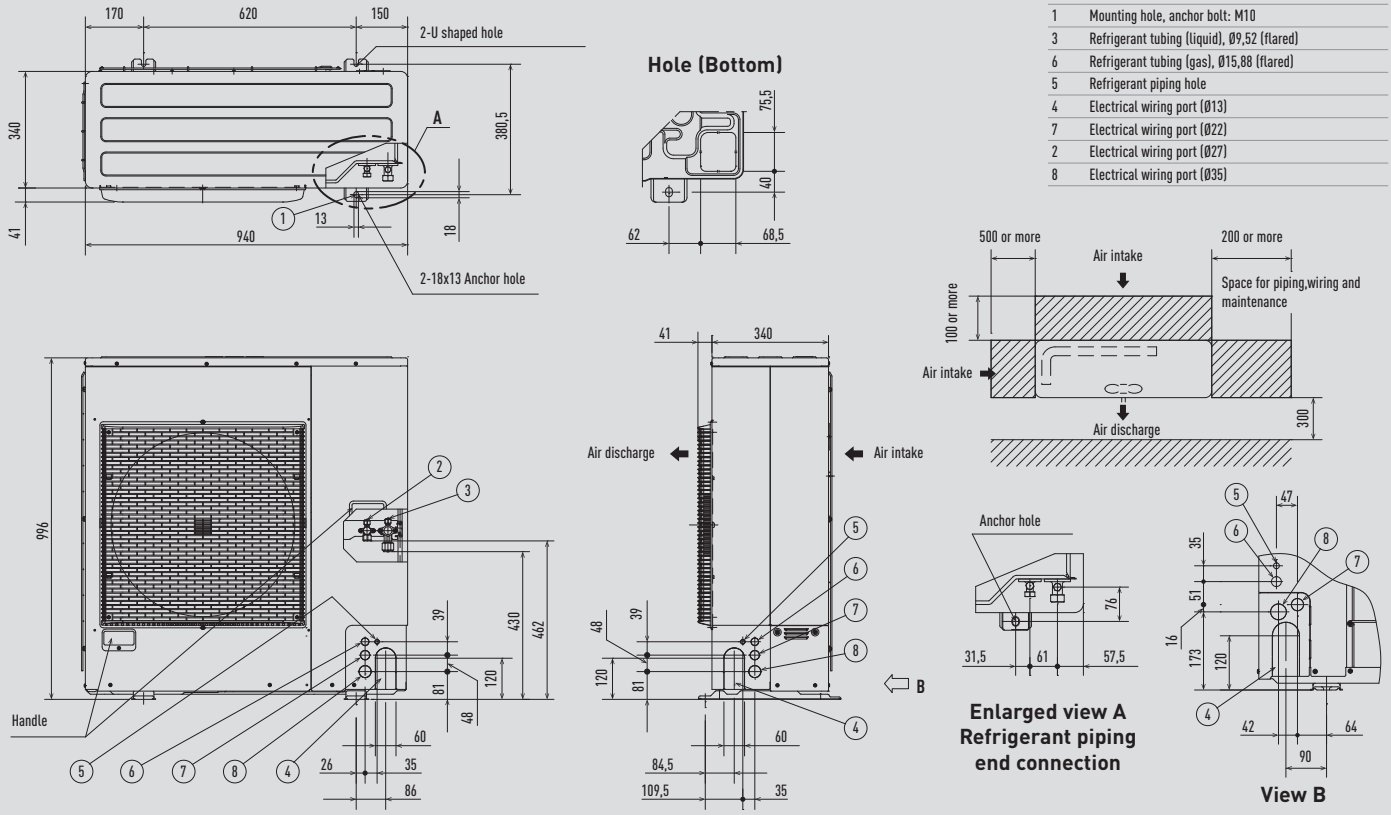

1	Mounting hole, anchor bolt: M10
3	Refrigerant tubing (liquid), Ø9,52 (flared)
6	Refrigerant tubing (gas), Ø15,88 (flared)
5	Refrigerant piping hole
4	Electrical wiring port (Ø13)
7	Electrical wiring port (Ø22)
2	Electrical wiring port (Ø27)
8	Electrical wiring port (Ø35)

Unit: mm

PACi Standard R32 outdoor unit: medium 1 fan

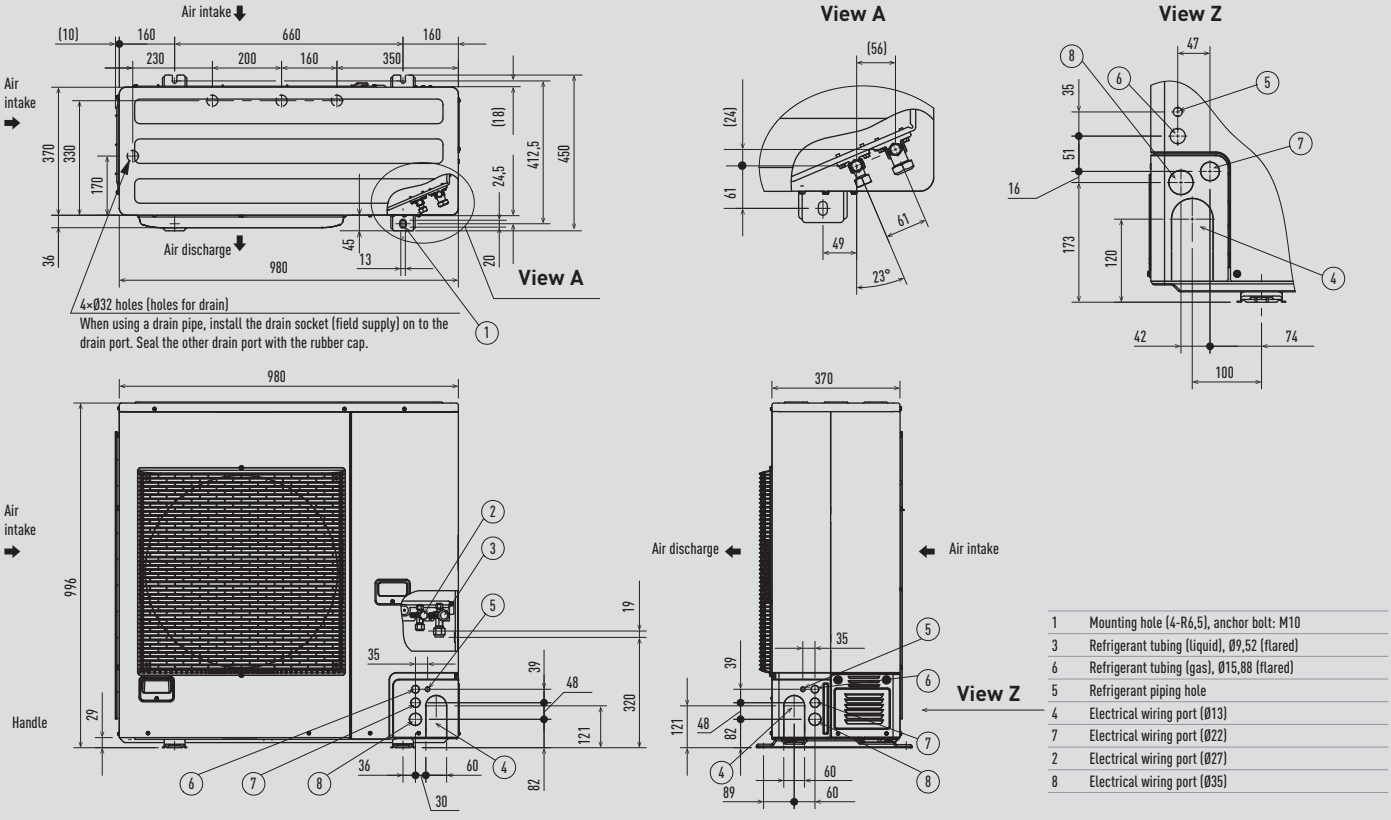

1	Mounting hole (4-R6,5), anchor bolt: M10
3	Refrigerant tubing (liquid), Ø9,52 (flared)
6	Refrigerant tubing (gas), Ø15,88 (flared)
5	Refrigerant piping hole
4	Electrical wiring port (Ø13)
7	Electrical wiring port (Ø22)
2	Electrical wiring port (Ø27)
8	Electrical wiring port (Ø35)

Unit: mm

PACi R32 outdoor unit: 2 fans

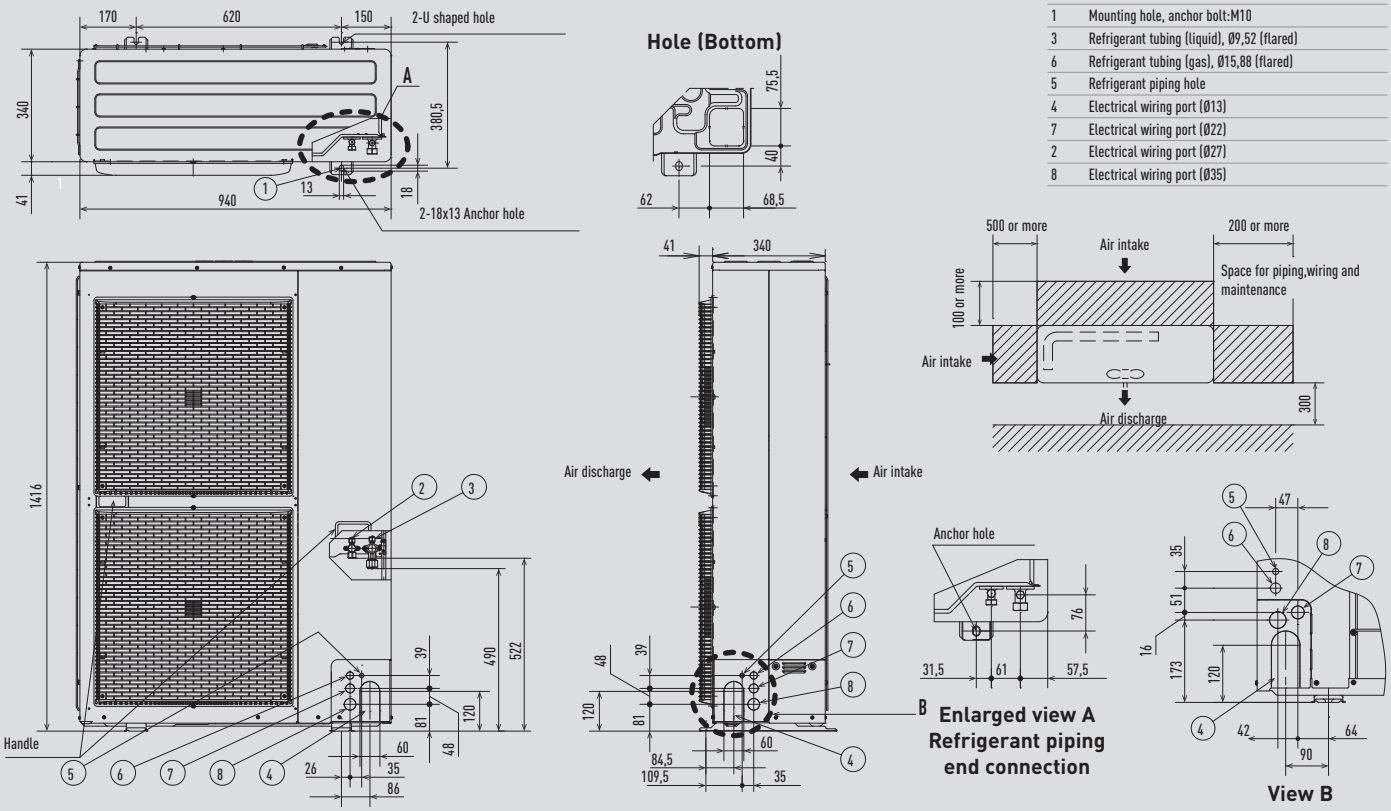

1	Mounting hole, anchor bolt:M10
3	Refrigerant tubing (liquid), Ø9,52 (flared)
6	Refrigerant tubing (gas), Ø15,88 (flared)
5	Refrigerant piping hole
4	Electrical wiring port (Ø13)
7	Electrical wiring port (Ø22)
2	Electrical wiring port (Ø27)
8	Electrical wiring port (Ø35)

Unit: mm

Big PACi R32 outdoor unit 20,00 and 25,00kW

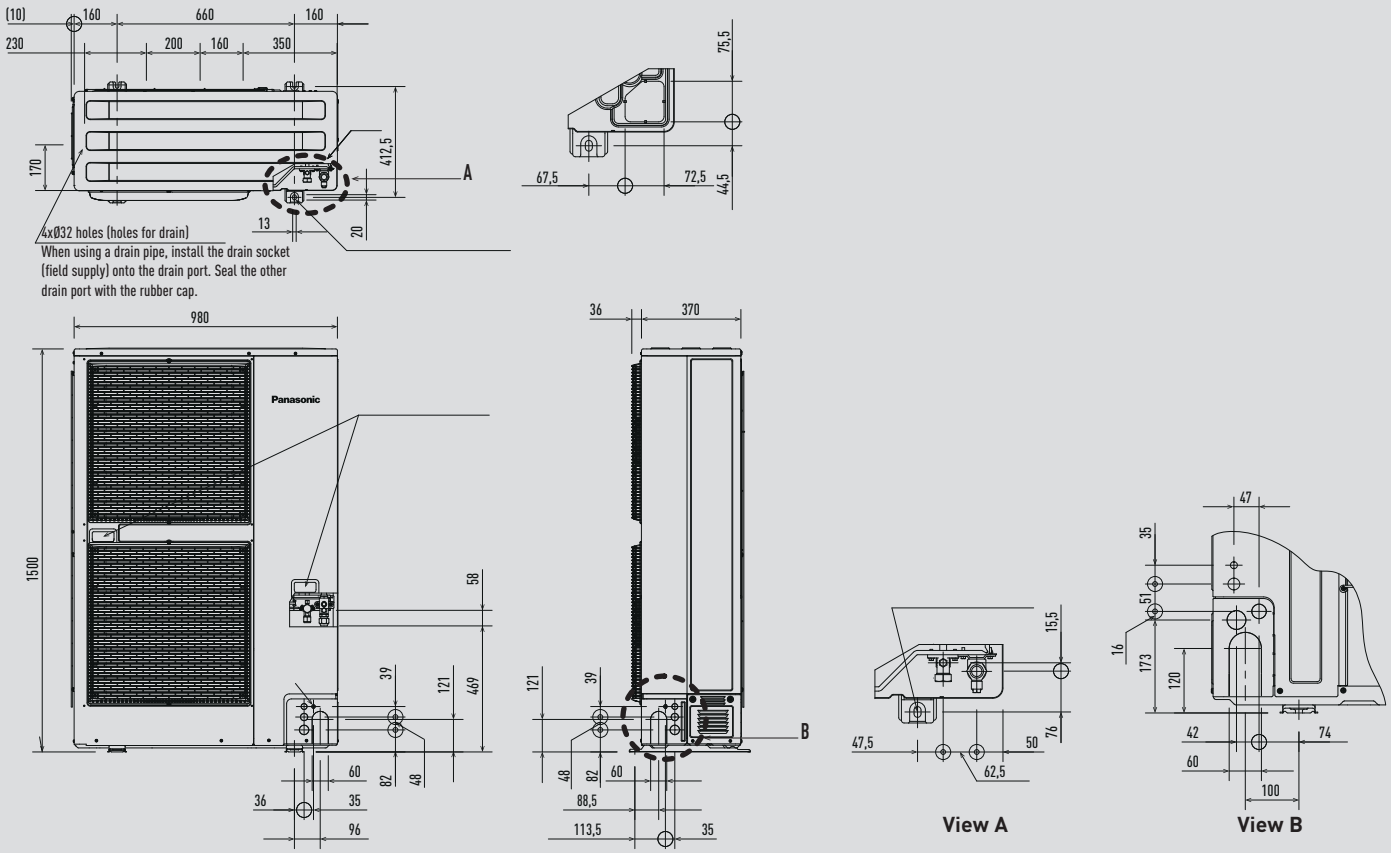

Unit: mm

PACi R410A outdoor unit: small 1 fan

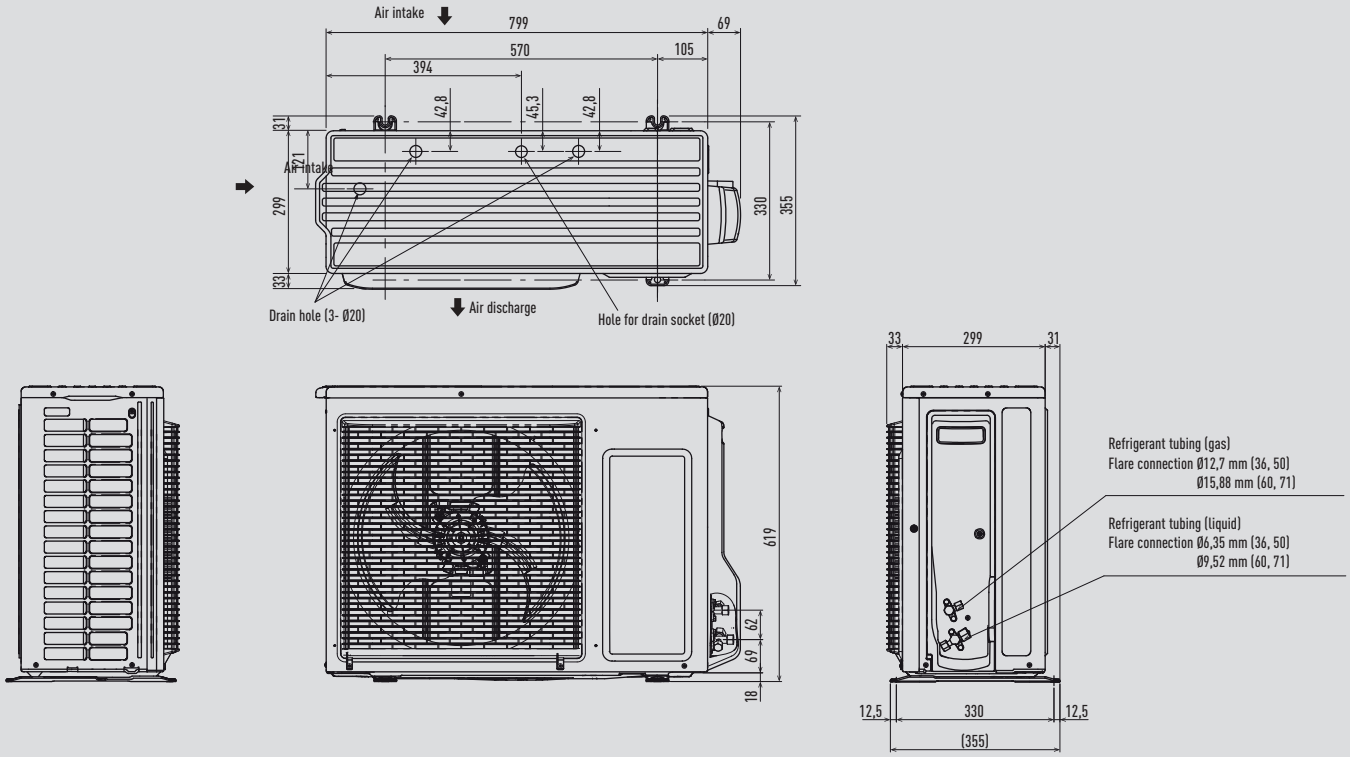

Unit: mm

PACi R410A outdoor unit: medium 1 fan

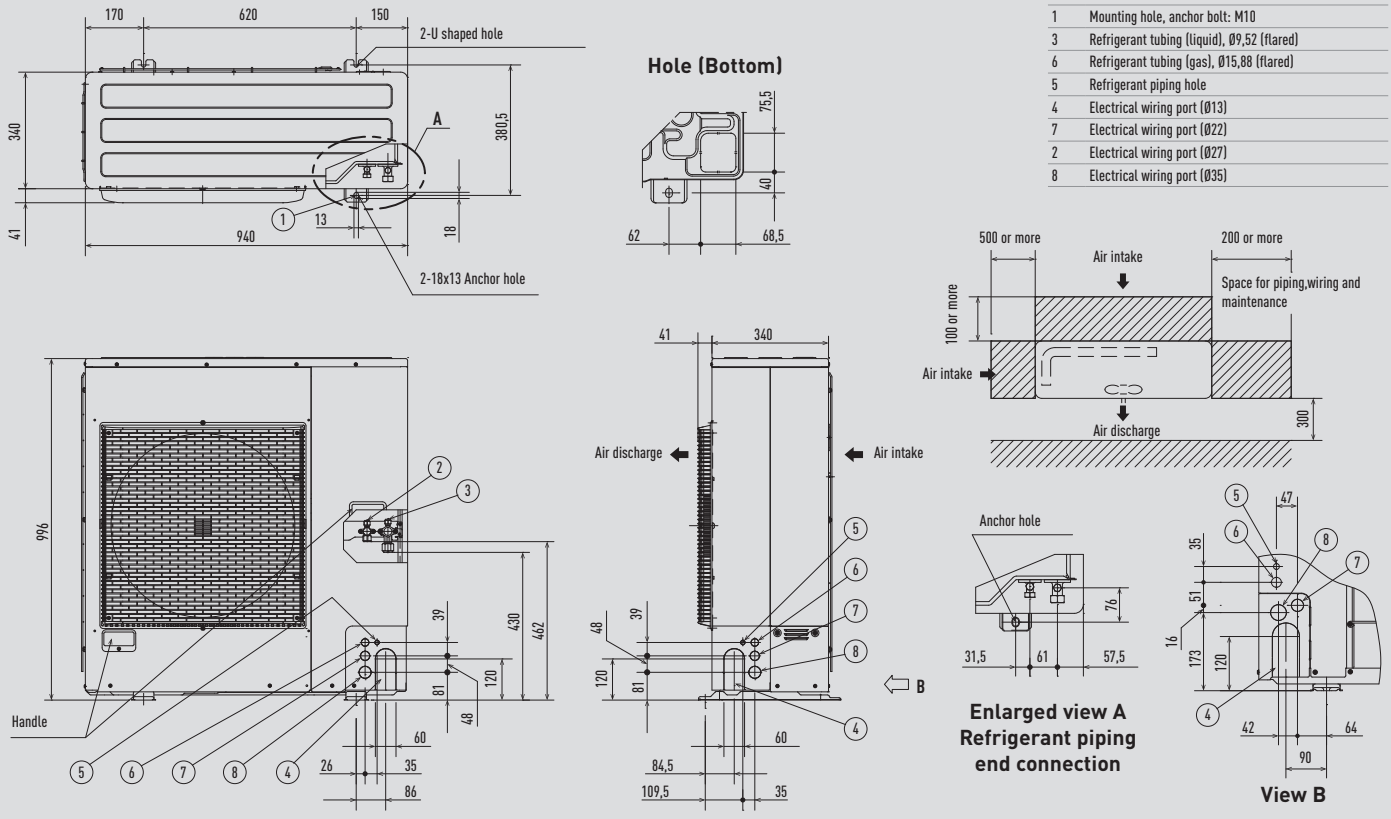

1	Mounting hole, anchor bolt: M10
3	Refrigerant tubing (liquid), Ø9,52 (flared)
6	Refrigerant tubing (gas), Ø15,88 (flared)
5	Refrigerant piping hole
4	Electrical wiring port (Ø13)
7	Electrical wiring port (Ø22)
2	Electrical wiring port (Ø27)
8	Electrical wiring port (Ø35)

Unit: mm

PACi R410A outdoor unit: 2 fans

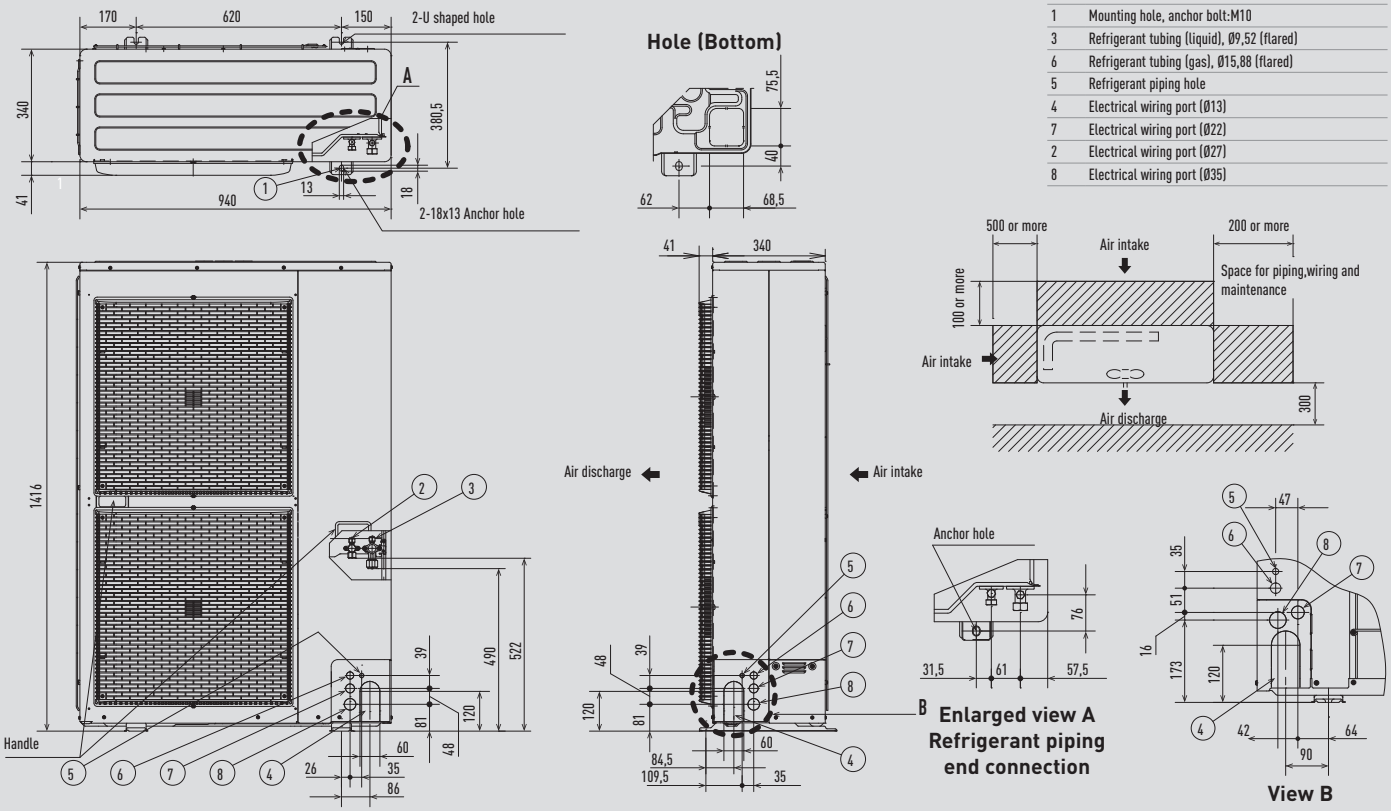

1	Mounting hole, anchor bolt:M10
3	Refrigerant tubing (liquid), Ø9,52 (flared)
6	Refrigerant tubing (gas), Ø15,88 (flared)
5	Refrigerant piping hole
4	Electrical wiring port (Ø13)
7	Electrical wiring port (Ø22)
2	Electrical wiring port (Ø27)
8	Electrical wiring port (Ø35)

Unit: mm

Big PACi R410A outdoor unit 20,00 and 25,00kW

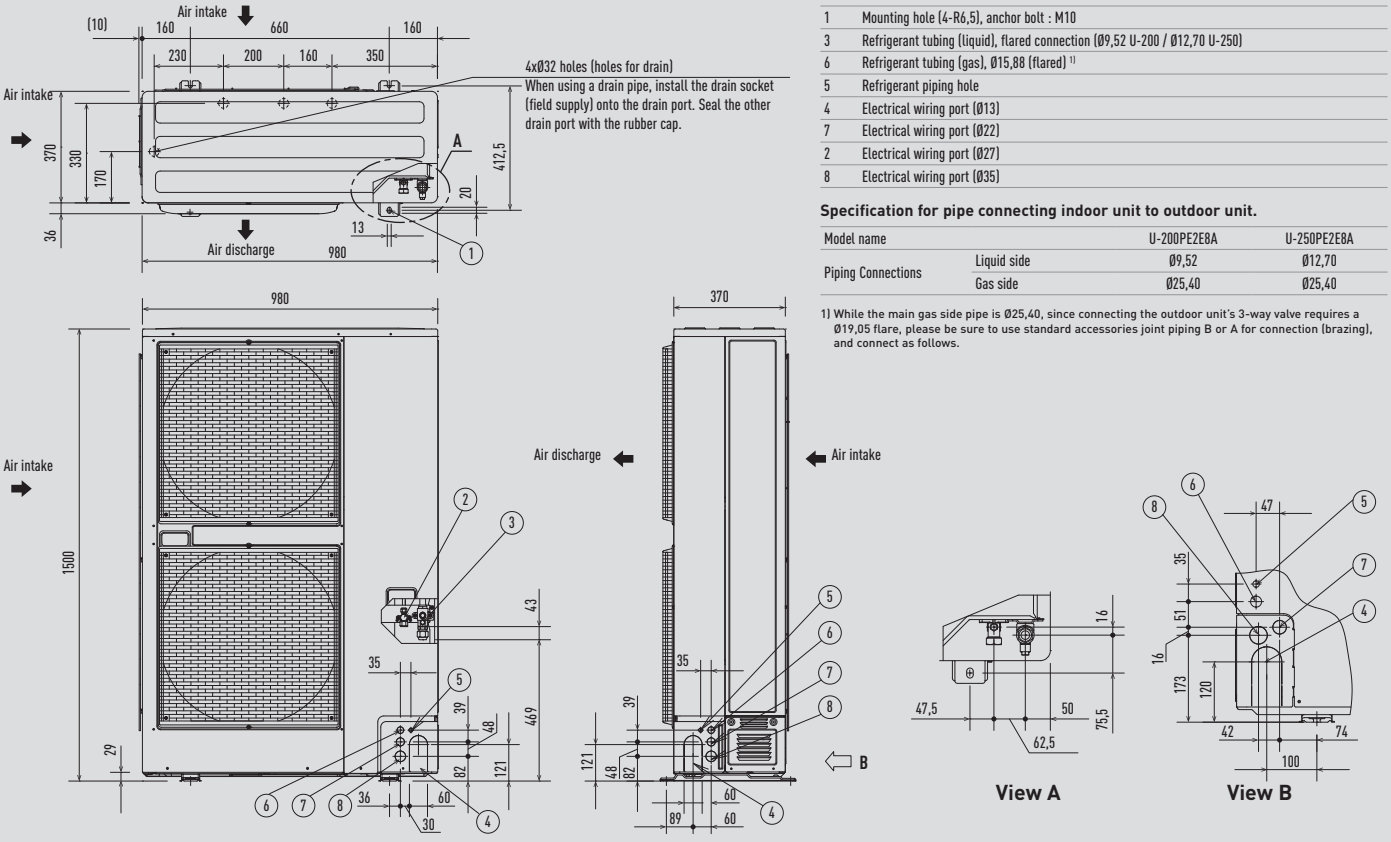

1	Mounting hole (4-R6,5), anchor bolt : M10
3	Refrigerant tubing (liquid), flared connection (Ø9,52 U-200 / Ø12,70 U-250)
6	Refrigerant tubing (gas), Ø15,88 (flared) [1]
5	Refrigerant piping hole
4	Electrical wiring port (Ø13)
7	Electrical wiring port (Ø22)
2	Electrical wiring port (Ø27)
8	Electrical wiring port (Ø35)

Specification for pipe connecting indoor unit to outdoor unit.

Model name		U-200PE2E8A	U-250PE2E8A
Piping Connections	Liquid side	Ø9,52	Ø12,70
	Gas side	Ø25,40	Ø25,40

1) While the main gas side pipe is Ø25,40, since connecting the outdoor unit's 3-way valve requires a Ø19,05 flare, please be sure to use standard accessories joint piping B or A for connection (brazing), and connect as follows.

Unit: mm

PACi PRO-HT Tank

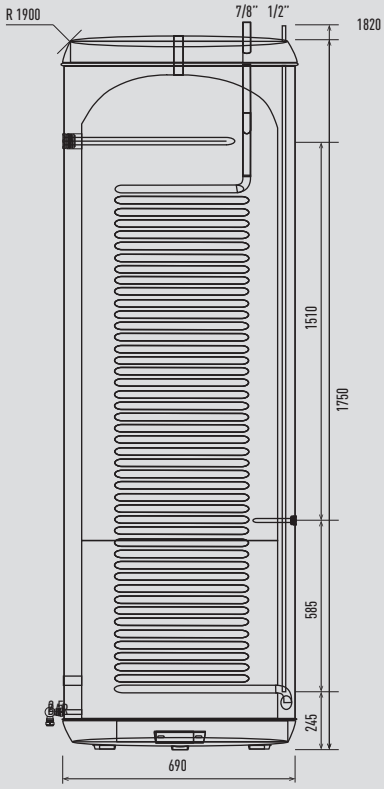

Note: R value indicates maximum overturning height.

Unit: mm

PACi Water Heat Exchanger

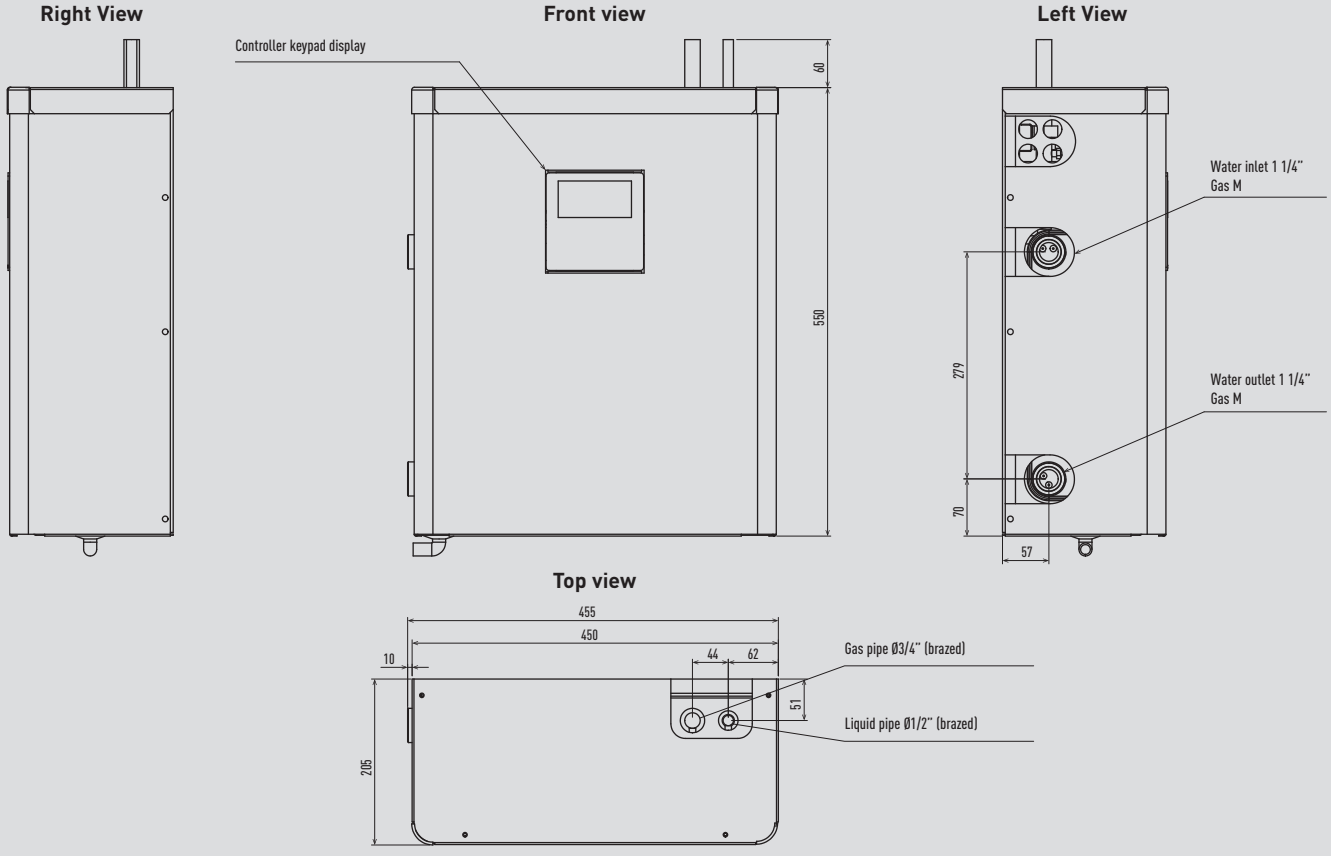

Unit: mm

AHU Connection Kit

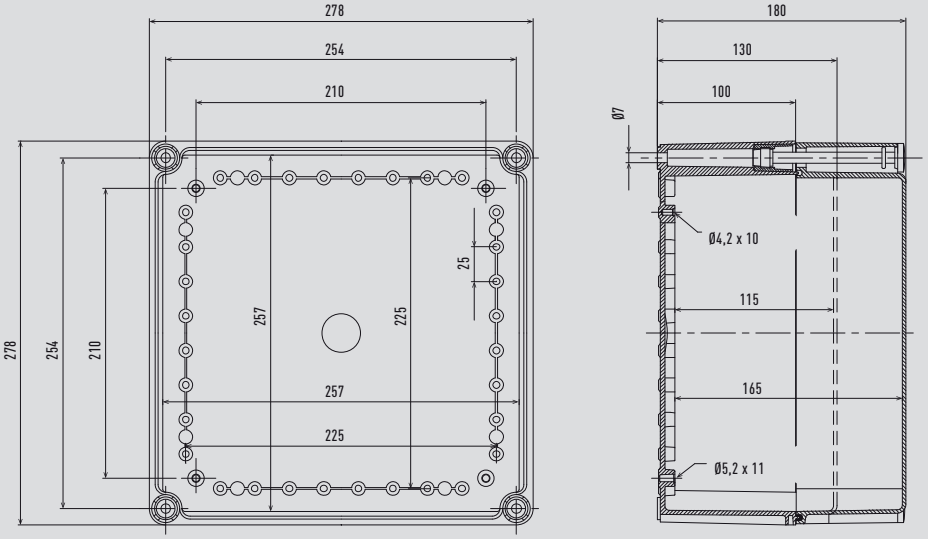

Front view (transparent cover removed) **Side view**

Unit: mm

Air Curtain with DX Coil

Top view

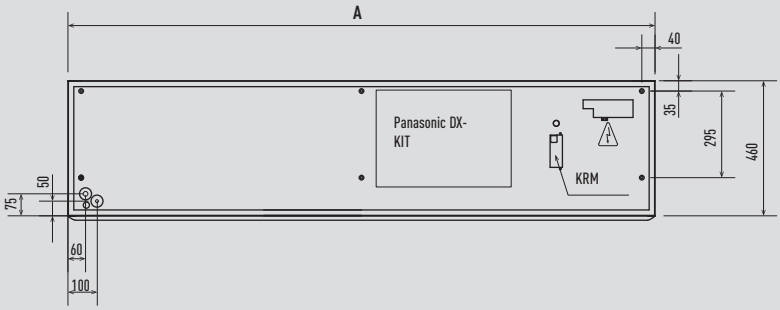

Side view

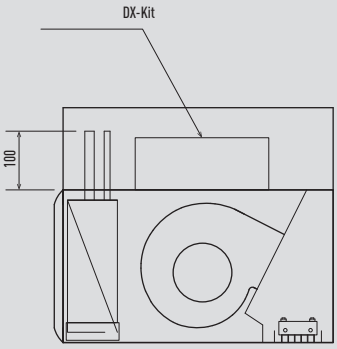

Front view

Bottom view

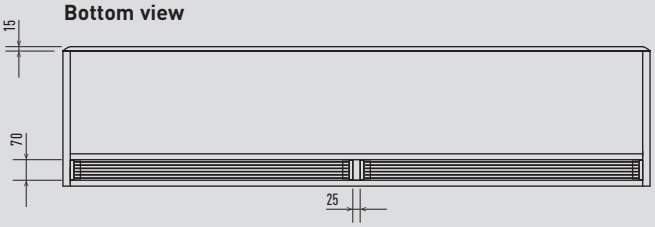

	PAW-10PAIRC-LS	PAW-15PAIRC-LS	PAW-20PAIRC-LS	PAW-25PAIRC-LS
	PAW-10PAIRC-HS	PAW-15PAIRC-HS	PAW-20PAIRC-HS	PAW-25PAIRC-HS
A	1,0m	1,5m	2,0m	2,5m

Unit: mm

Electric Air Curtain

Front view

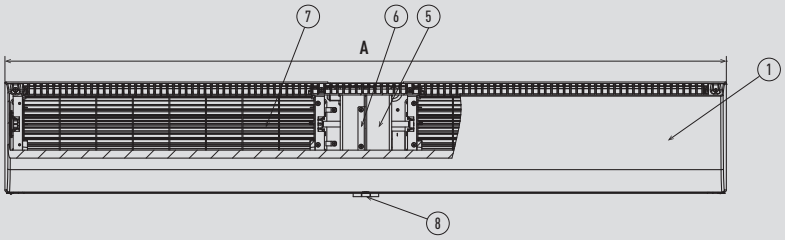

Right view

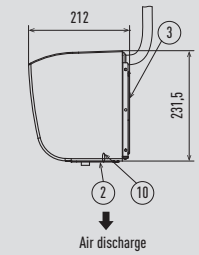

Back view

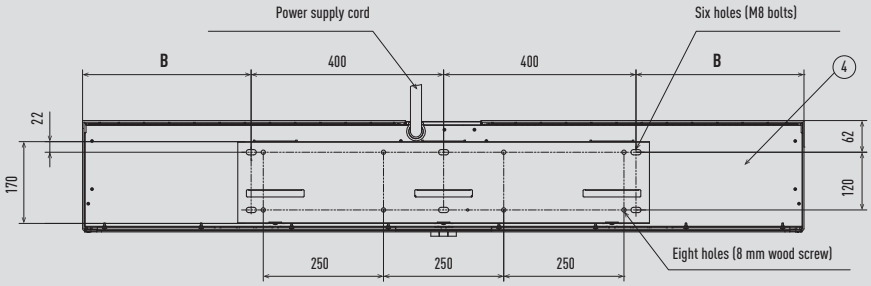

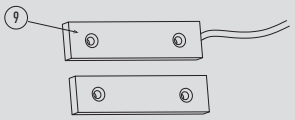

1	Front panel	6	Motor support
2	Air discharge	7	Cross-flow impeller
3	Mounting plate	8	Push-button switch
4	Back panel	9	Gate magnetic switch
5	Motor	10	Guide plate

	FY-3009U1	FY-3012U1	FY-3015U1
A	900	1200	1500
B	50	200	350

Unit: mm

Mini ECOi LE2 Series High Efficiency 4 to 6HP

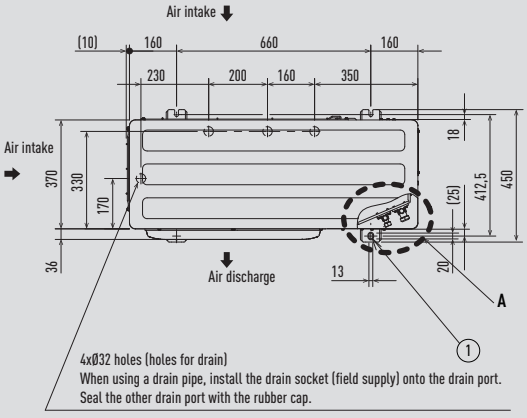

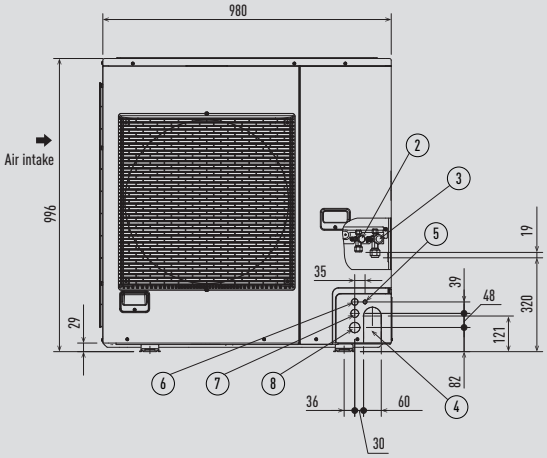

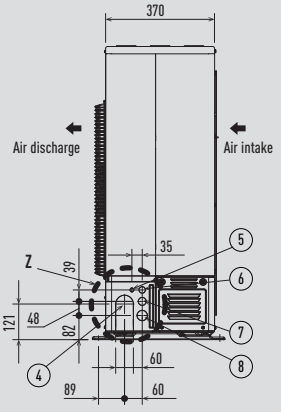

A View

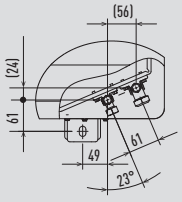

View Z

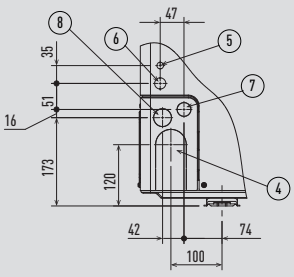

1	Mounting hole (4-R6,5), anchor bolt: M10
2	Refrigerant tubing (liquid), Ø9,52 (flared)
3	Refrigerant tubing (gas), Ø19,05 (flared)
4	Refrigerant piping port
5	Electrical wiring port (Ø13)
6	Electrical wiring port (Ø22)
7	Electrical wiring port (Ø27)
8	Electrical wiring port (Ø35)

Unit: mm

Mini ECOi LE1 Series High Efficiency 8 and 10HP

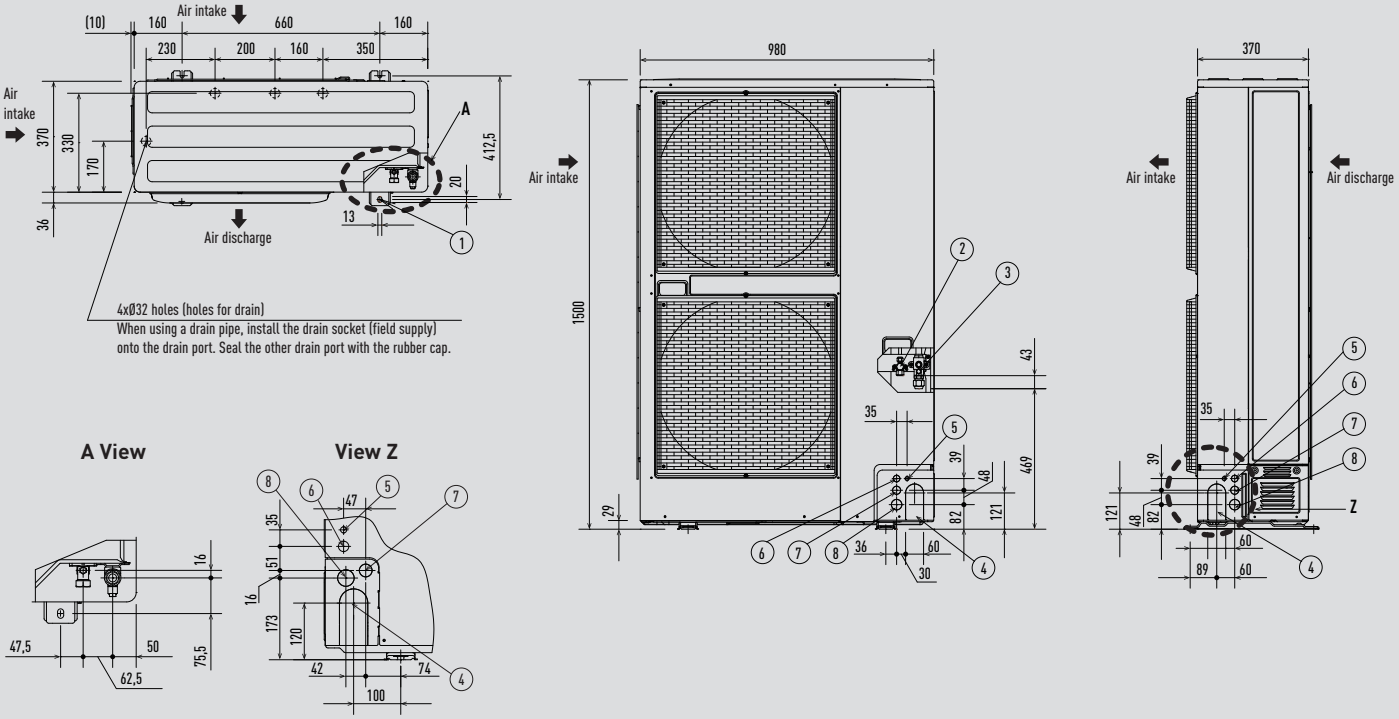

1	Mounting hole (4-R6,5), anchor bolt: M10	5	Electrical wiring port (Ø13)
2	Refrigerant tubing (liquid), Ø9,52 (flared)	6	Electrical wiring port (Ø22)
3	Refrigerant tubing (gas), Ø19,05 (flared)	7	Electrical wiring port (Ø27)
4	Refrigerant piping port	8	Electrical wiring port (Ø35)

The piping of the gas main has a diameter of ø22,22, but the connection to the service valve of the outdoor unit has a diameter of ø19,05, so a flare has to be used. Consequently, be sure to use the enclosed joint tube B and joint tube A in making connections (braze).

Unit: mm

2-Pipe ECOi EX ME2 Series 8 and 10HP

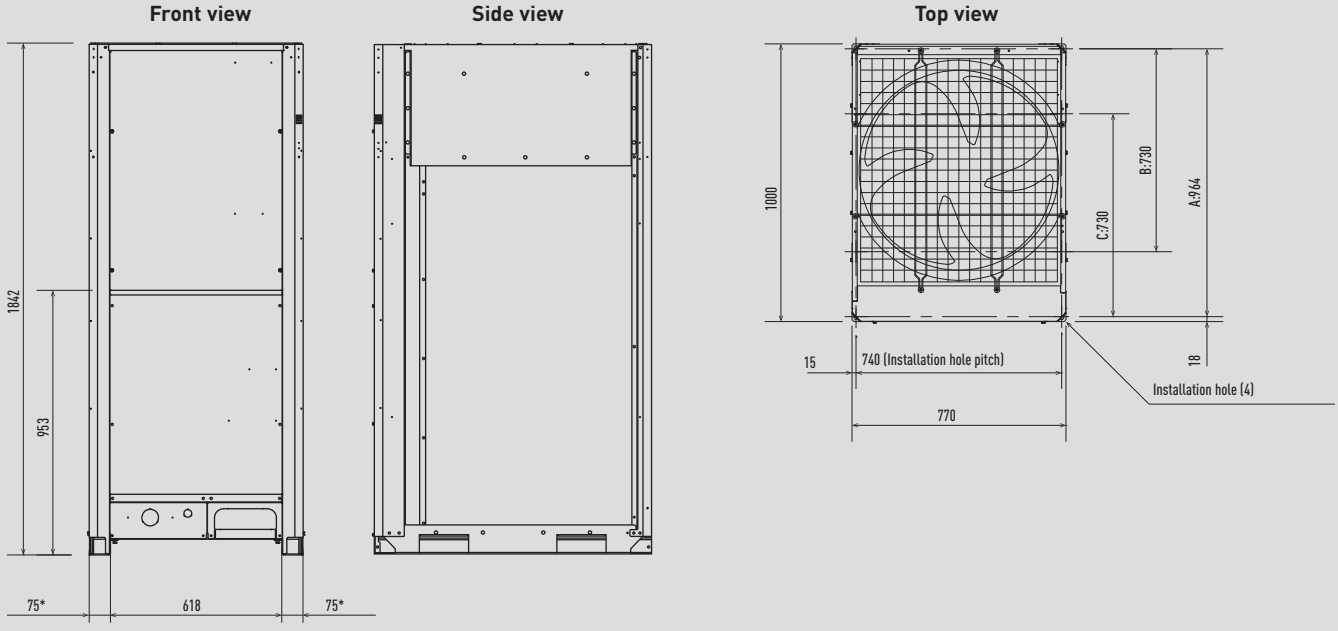

According to the installation site, you may choose the setting position in the depth direction of the anchor bolt from A, B or C.

A: 964 (Installation hole pitch). The piping is routed out from the front.
B: 730 (Installation hole pitch)*. The piping is routed out from the bottom.
C: 730 (Installation hole pitch).

* Installation fixing bracket. Installation side.

Unit: mm

2-Pipe ECOi EX ME2 Series 12, 14 and 16HP / 3-Pipe ECOi EX MF3 Series 8 to 16HP

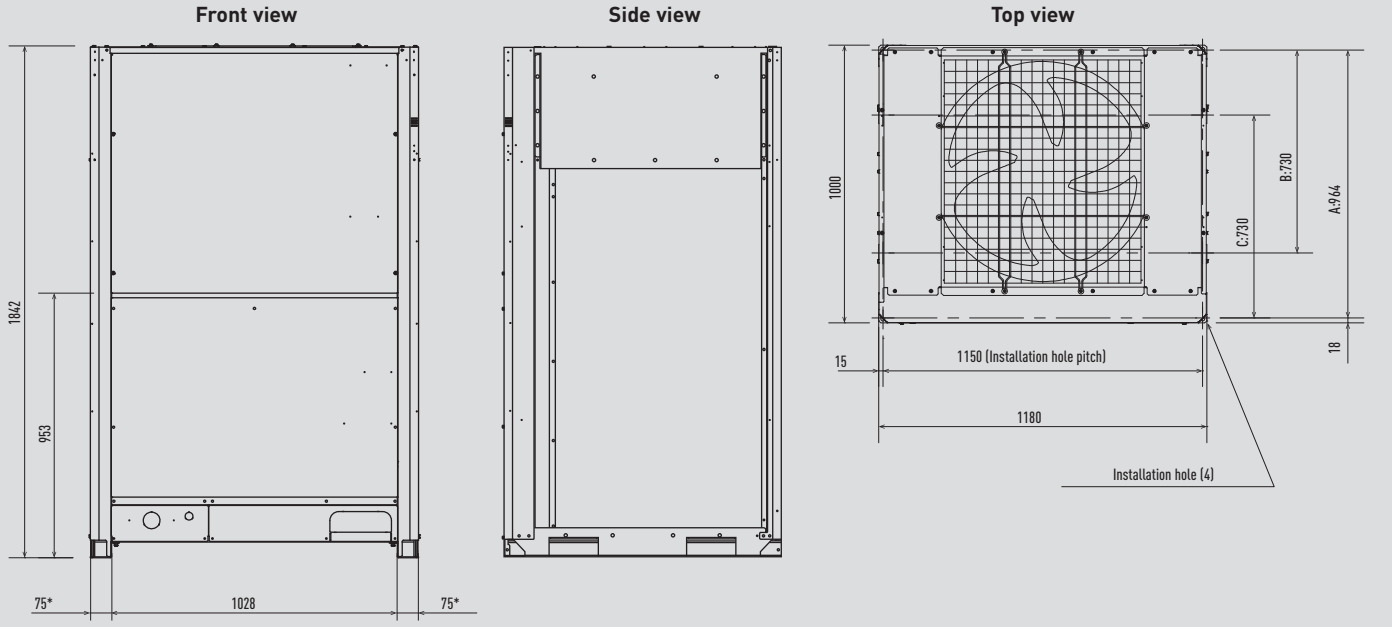

According to the installation site, you may choose the setting position in the depth direction of the anchor bolt from A, B or C.

A: 964 (Installation hole pitch). The piping is routed out from the front.
B: 730 (Installation hole pitch)*. The piping is routed out from the bottom.
C: 730 (Installation hole pitch).

* Installation fixing bracket. Installation side.

Unit: mm

2-Pipe ECOi EX ME2 Series 18 and 20HP

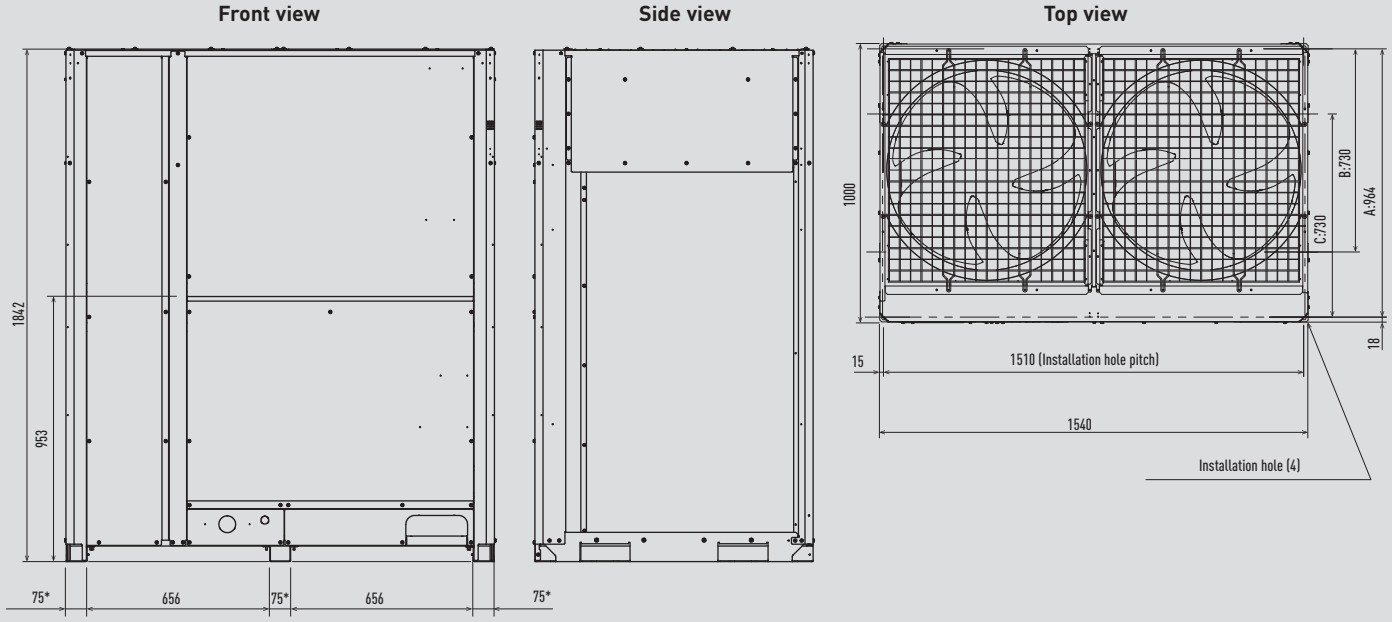

According to the installation site, you may choose the setting position in the depth direction of the anchor bolt from A, B or C.

A: 964 (Installation hole pitch). The piping is routed out from the front.
B: 730 (Installation hole pitch)*. The piping is routed out from the bottom.
C: 730 (Installation hole pitch).

* Installation fixing bracket. Installation side.

Unit: mm

ECO G GE3 Series 16 and 20HP

	Type	16 HP	20 HP
1	Refrigerant tubing (gas)	Ø28,58	
2	Refrigerant tubing (liquid)	Ø12,70	Ø15,88
3	Exhaust gas drain port	Hose outer diameter: Ø25 (accessory)	
4	Electrical power supply port	Ø28	
5	Inter-unit cable port	Ø28	
6	Fuel gas port	R3/4	
7	Condensation drain opening	Ø20	
8	Rain and condensation outlet		

	Type	16 HP	20 HP
9	Engine exhaust outlet		
10	Suspension holes 4-Ø20x30		
11	Anchor holes 4-22x30		
12	Segmented display		
13	Coolant intake (top)		
14	Air intake		
15	Coolant level		
16	Hot water inlet	Rp3/4	
17	Hot water outlet	Rp3/4	

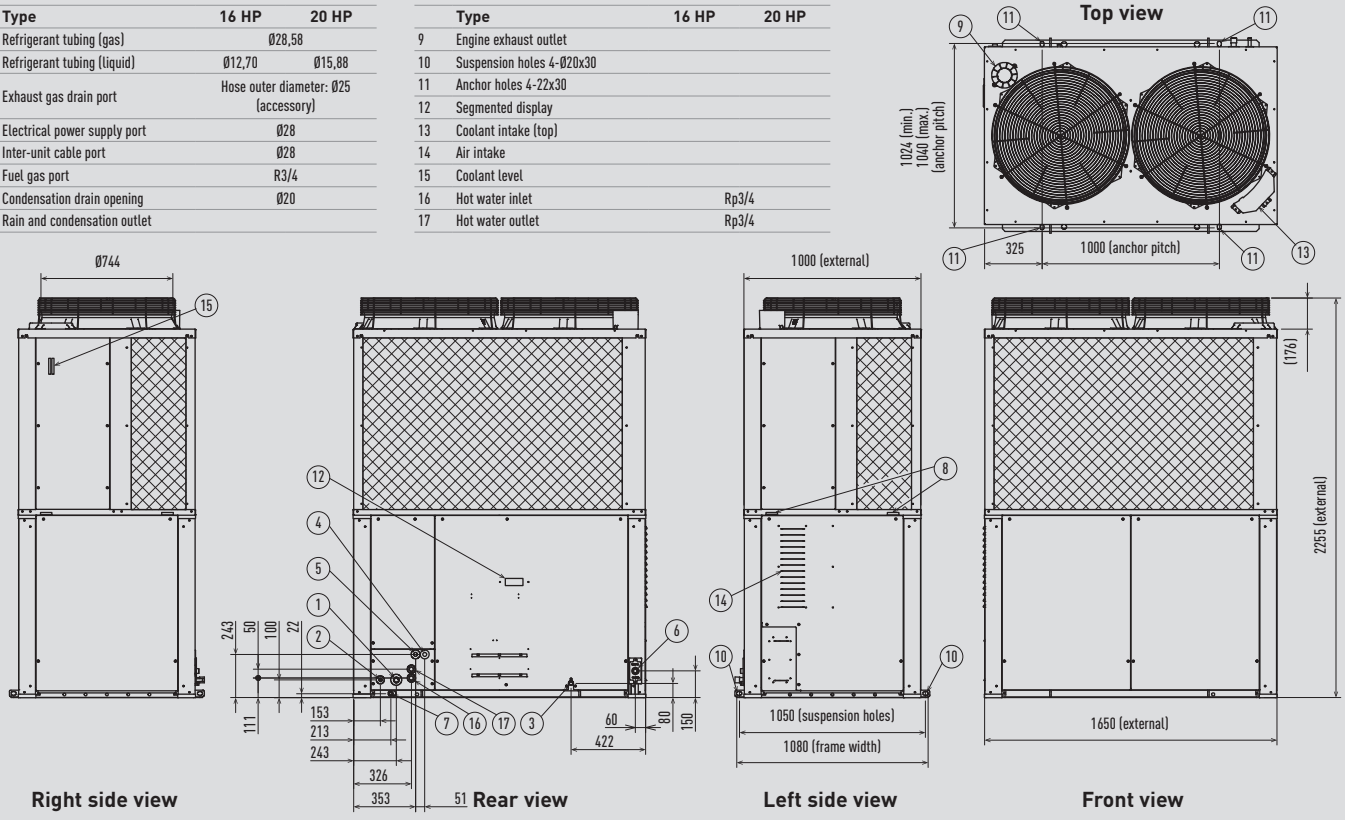

Unit: mm

ECO G GE3 Series 25 and 30HP

	Type	25 HP	30 HP
1	Refrigerant tubing (gas)	Ø28,58	Ø31,75
2	Refrigerant tubing (liquid)	Ø15,88	Ø19,05
3	Exhaust gas drain port	Hose outer diameter: Ø25 (accessory)	
4	Electrical power supply port	Ø28	
5	Inter-unit cable port	Ø28	
6	Fuel gas port	R3/4	
7	Condensation drain opening	Ø20	
8	Rain and condensation outlet		

	Type	25 HP	30 HP
9	Engine exhaust outlet		
10	Suspension holes 4-Ø20x30		
11	Anchor holes 4-22x30		
12	Segmented display		
13	Coolant intake (top)		
14	Air intake		
15	Coolant level		
16	Hot water inlet	Rp3/4	
17	Hot water outlet	Rp3/4	

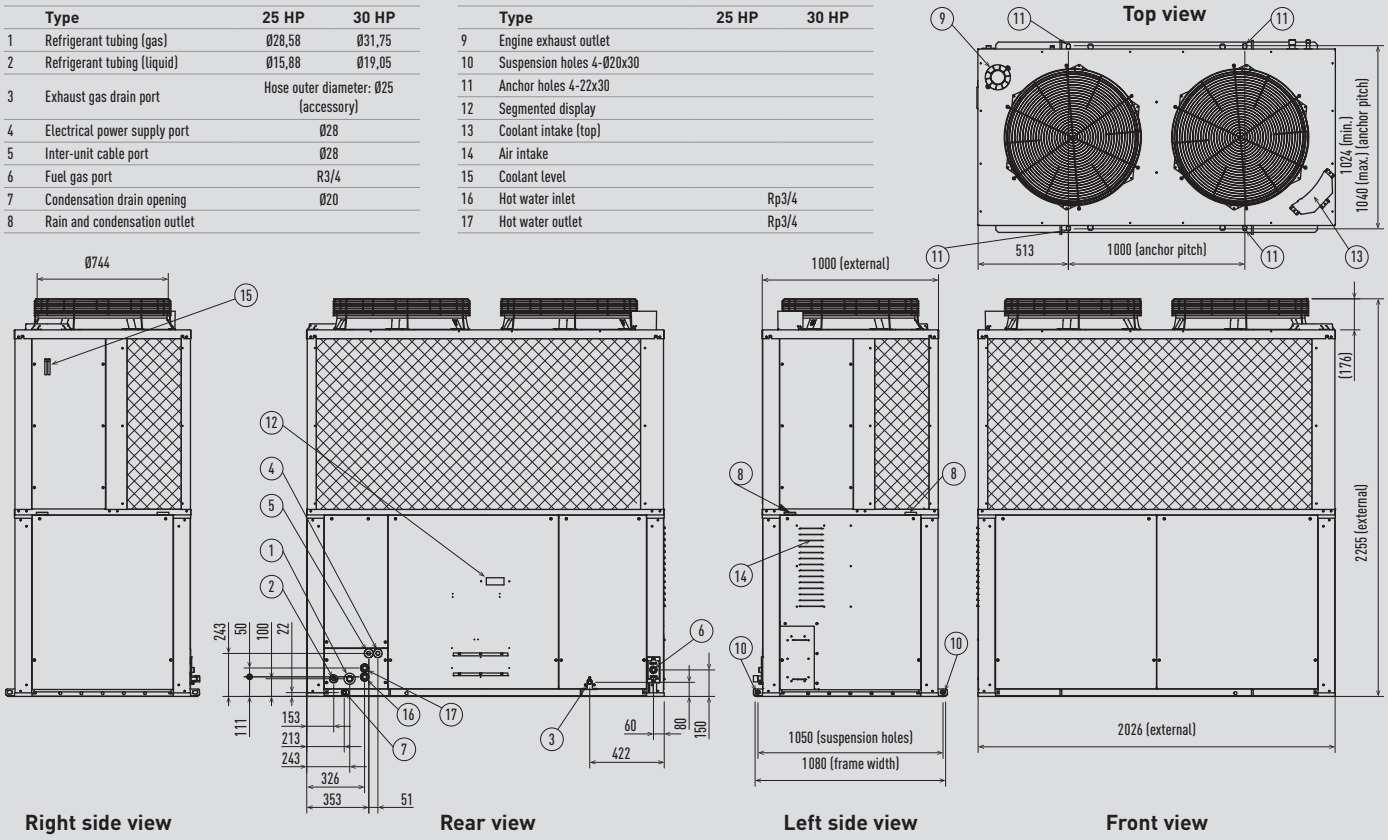

Unit: mm

ECO G GF3 Series 16 and 20HP

	Type	16HP	20HP
1	Suction refrigerant tubing (gas)	Ø28,58	
2	Discharge refrigerant tubing (gas)	Ø22,22	Ø25,40
3	Refrigerant tubing (liquid)	Ø19,05	
4	Exhaust gas drain port	Hose outer diameter: Ø25 (accessory)	
5	Electrical power supply port	Ø28	
6	Inter-unit cable port	Ø28	
7	Fuel gas port	R3/4	
8	Condensation drain opening	Ø20	

9	Rain and condensation outlet	
10	Engine exhaust outlet	
11	Suspension holes 4-Ø20x30	
12	Anchor holes 4-22x30	
13	Segmented display	
14	Coolant intake (top)	
15	Air intake	
16	Coolant level	
17	Hot water inlet	Rp3/4
18	Hot water outlet	Rp3/4

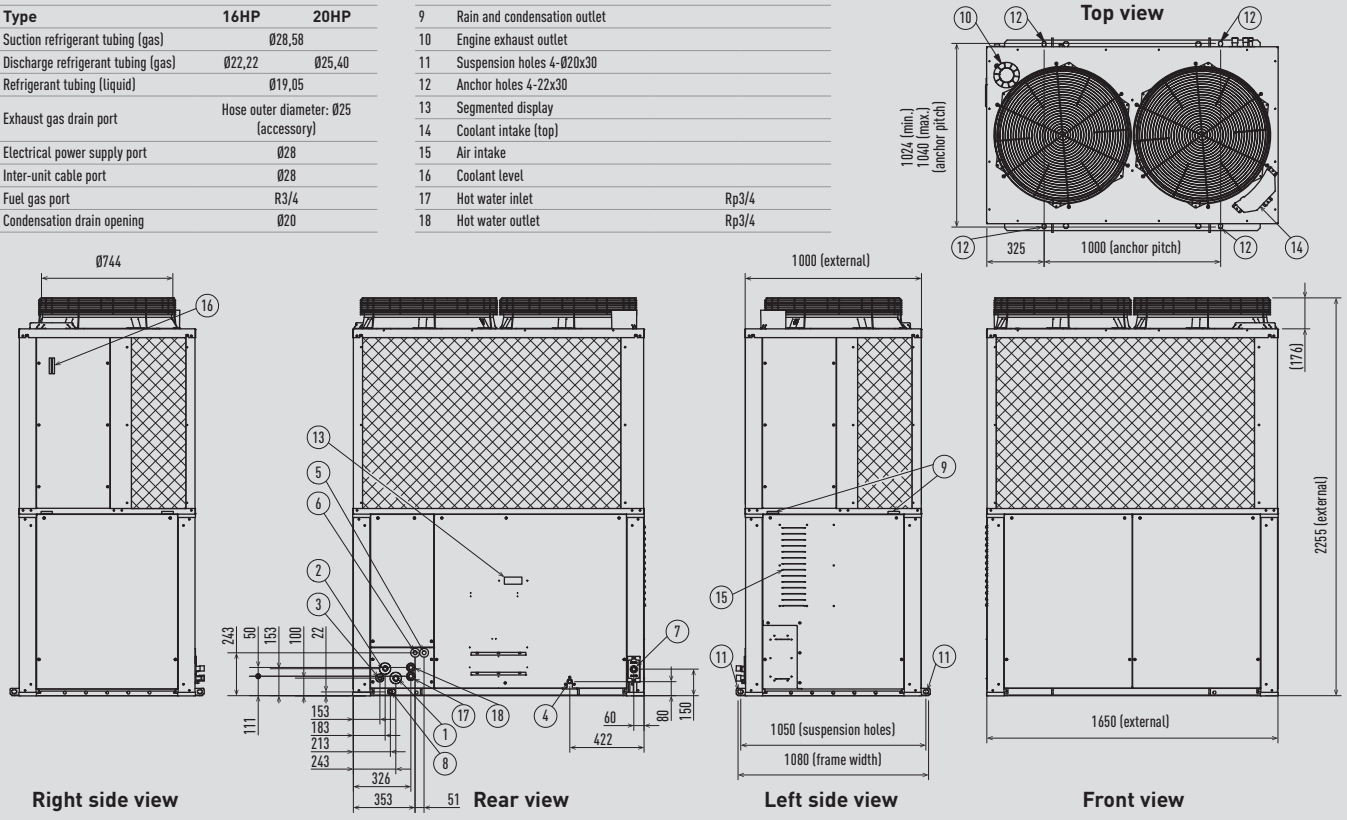

Unit: mm

ECO G GF3 Series 25HP

1	Suction Refrigerant tubing (gas)	Ø28,58
2	Discharge Refrigerant tubing (gas)	Ø25,40
3	Refrigerant tubing (liquid)	Ø19,05
4	Exhaust gas drain port	Hose outer diameter: Ø25 (accessory)
5	Electrical power supply port	Ø28
6	Inter-unit cable port	Ø28
7	Fuel gas port	R3/4
8	Condensation drain opening	Ø20
9	Rain and condensation outlet	

10	Engine exhaust outlet	
11	Suspension holes 4-Ø20x30	
12	Anchor holes 4-22x30	
13	Segmented display	
14	Coolant intake (top)	
15	Air intake	
16	Coolant level	
17	Hot water inlet	Rp3/4
18	Hot water outlet	Rp3/4

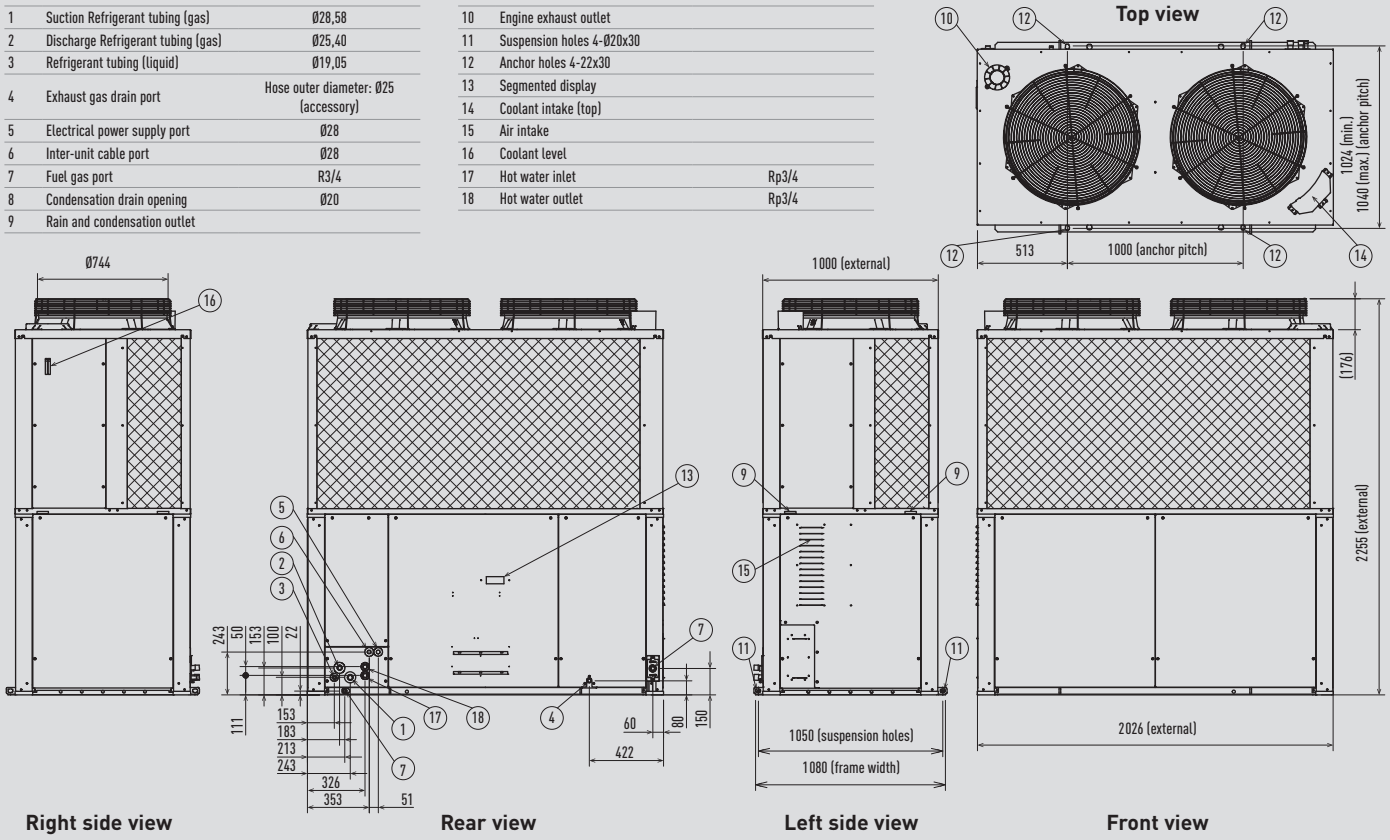

Unit: mm

3-Pipe Control Box Kit / Multiple connection type

Heat recovery box dimensions

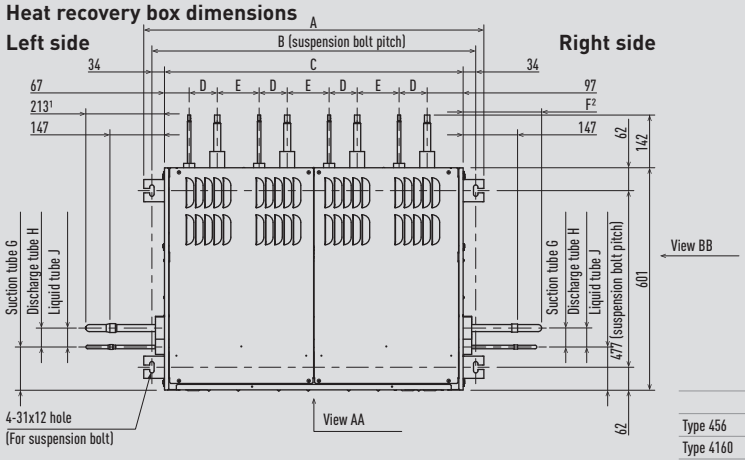

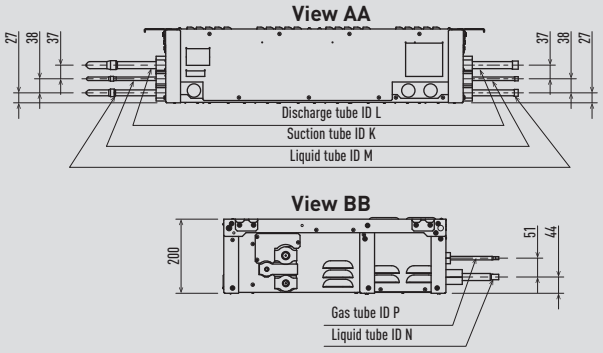

	A	B	C	D	E	F	G	H	J	K	L	M	N	P
Type 456	919	874	807	67	113	213	51	51	117	Ø19,05	Ø15,88	Ø9,52	Ø6,35	Ø12,70
Type 4160	919	874	807	67	113	207	55	54	113	Ø9,52	Ø15,88	Ø28,58	Ø25,40	Ø15,88
Type 656	1297	1253	1185	67	113	213	54	55	115	Ø25,40	Ø19,05	Ø12,70	Ø6,35	Ø12,70
Type 856	1675	1631	1563	67	113	213	53	53	115	Ø28,58	Ø22,22	Ø12,70	Ø6,35	Ø12,70

1) In case of right side connection.
2) Including the protection tubes when connecting to the left side.

Valve dimensions

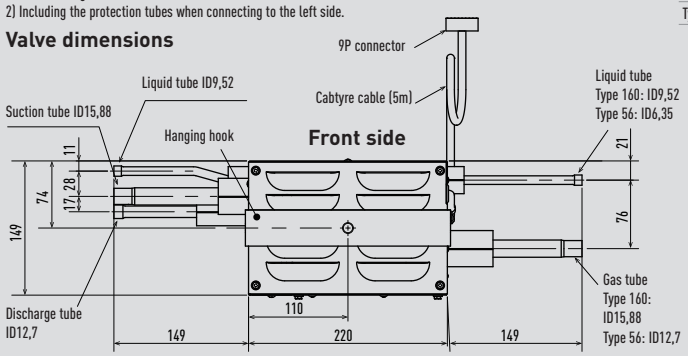

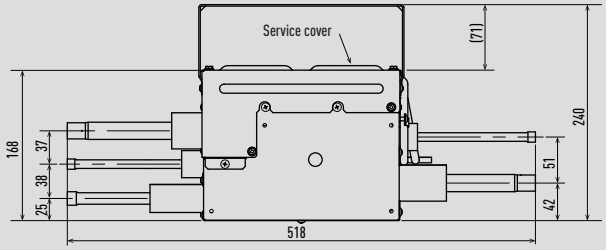

Unit: mm

Water Heat Exchanger for chilled and hot water production

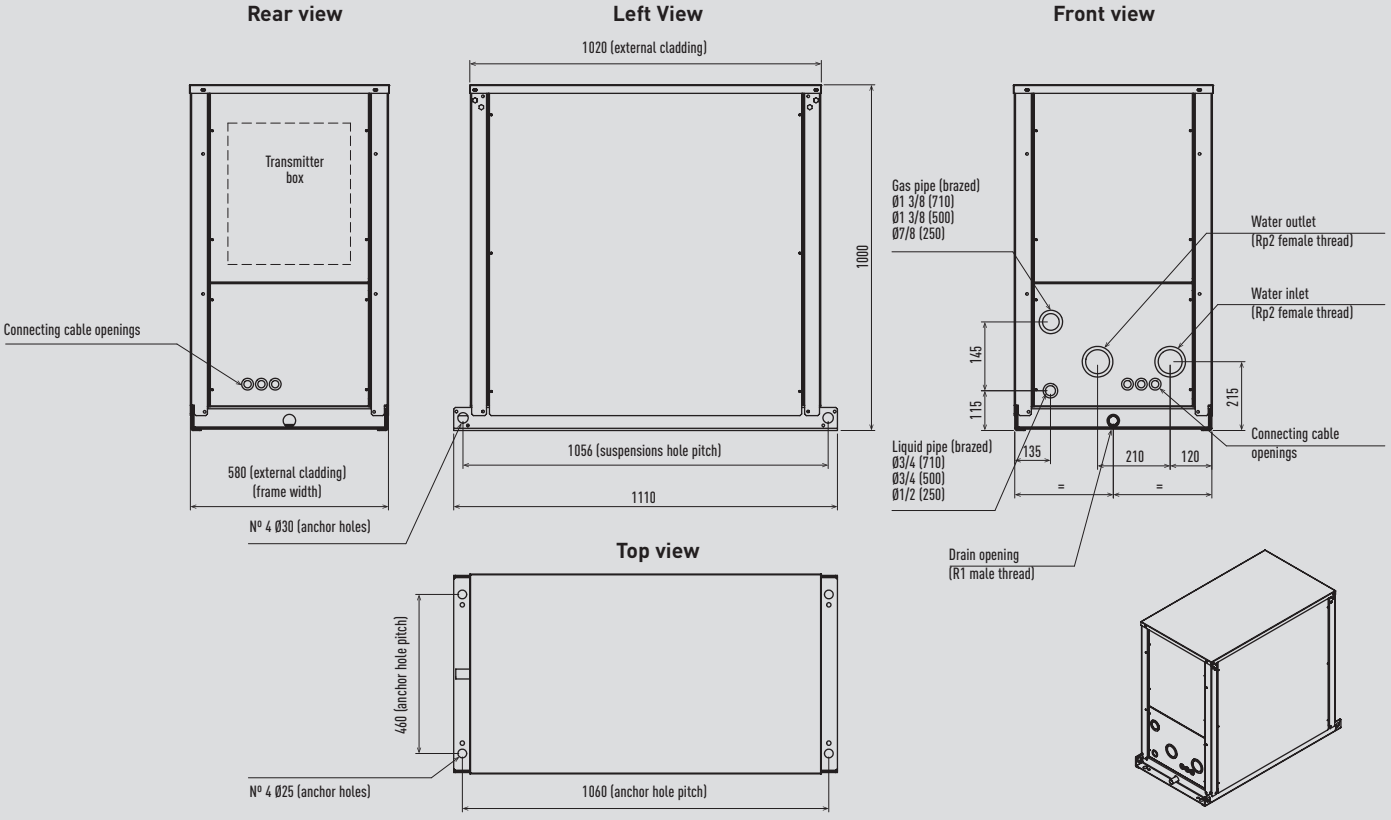

Unit: mm

U2 Type 4 Way 90x90 Cassette

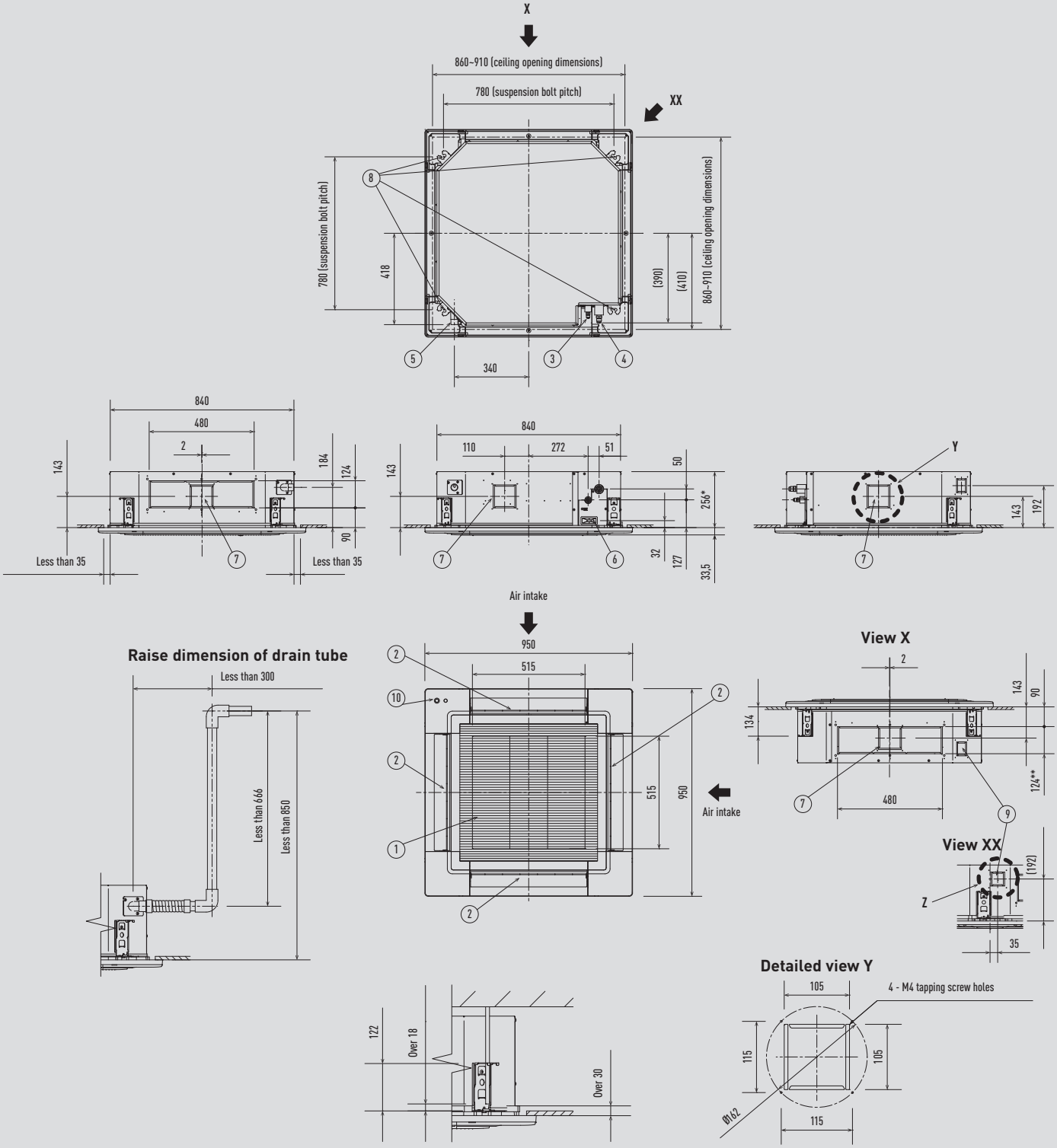

The length of the suspension bolts should be selected so that there is a gap of 30 mm or more below the lower surface of the ceiling (18 mm or more below the lower surface of the main unit), as shown in the figure at right. If the suspension bolt is too long, it will contact the ceiling panel and the unit cannot be installed.
Filter dimension: 520 x 520 x 15 mm.

* 319 mm for S-106MU2E5A / S-140MU2E5A / S-160MU2E5A.
** 187 mm for S-106MU2E5A / S-140MU2E5A / S-160MU2E5A.

Type		22-56	60-160
1	Air intake		
2	Discharge outlet		
3	Refrigerant tubing (liquid)	Ø6,35 (flared)	Ø9,52 (flared)
4	Refrigerant tubing (gas)	Ø12,70 (flared)	Ø15,88 (flared)
5	Drain tube connection port VP25	Outer diameter Ø32	
6	Power supply port		
7	Suspension bolt hole	4-12x30 elongated hole	
8	Fresh air intake duct connection port	Ø100 [1]	
9	Suspension bolt hole	4-12x30 elongated hole	
10	Econavi sensor (only CZ-KPU3A)		

1) Necessary to attach duct connecting flange(field supplied).

Unit: mm

Y2 Type 4 Way 60x60 Cassette

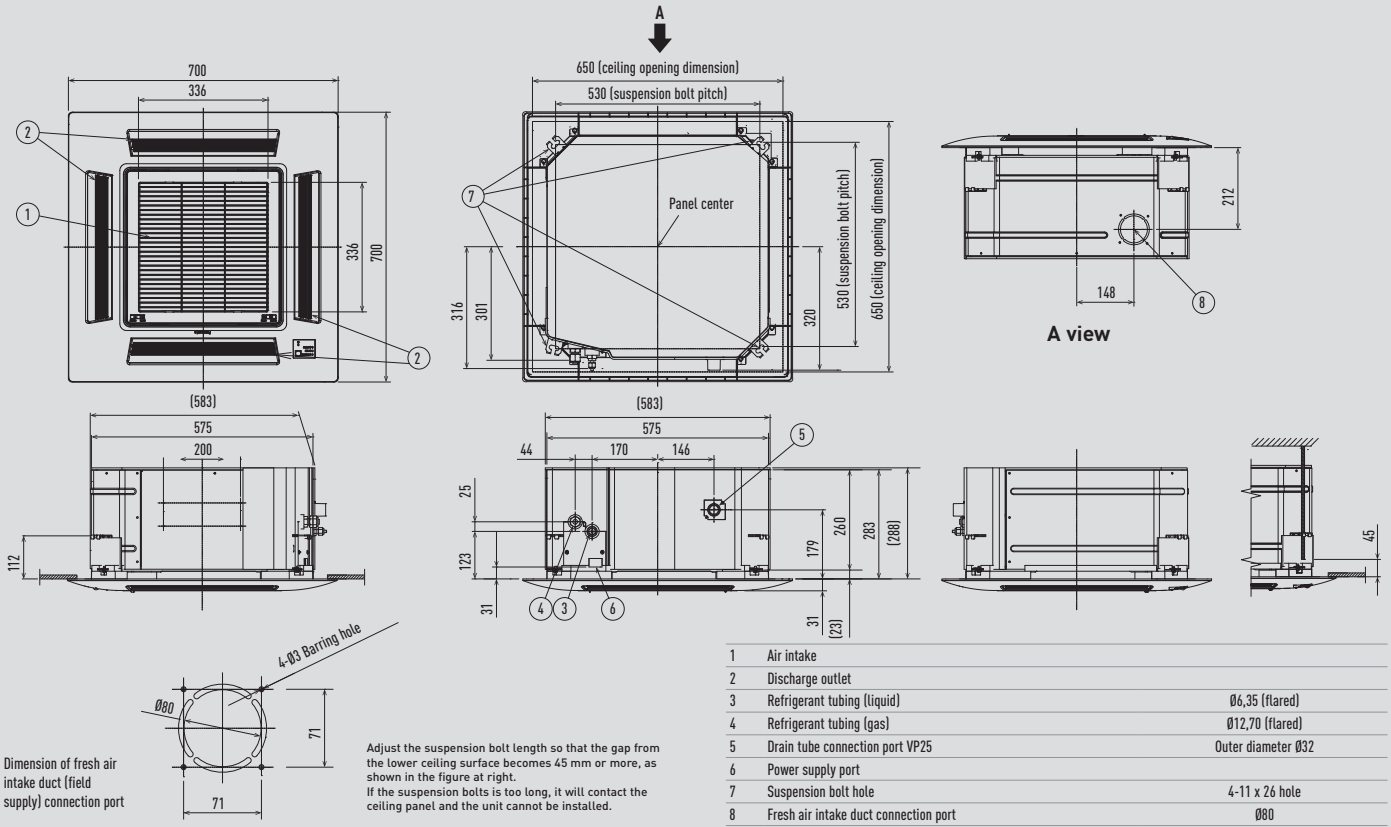

Dimension of fresh air intake duct (field supply) connection port

Adjust the suspension bolt length so that the gap from the lower ceiling surface becomes 45 mm or more, as shown in the figure at right.
If the suspension bolts is too long, it will contact the ceiling panel and the unit cannot be installed.

1	Air intake	
2	Discharge outlet	
3	Refrigerant tubing (liquid)	Ø6,35 (flared)
4	Refrigerant tubing (gas)	Ø12,70 (flared)
5	Drain tube connection port VP25	Outer diameter Ø32
6	Power supply port	
7	Suspension bolt hole	4-11 x 26 hole
8	Fresh air intake duct connection port	Ø80

Unit: mm

L1 Type 2 Way Cassette

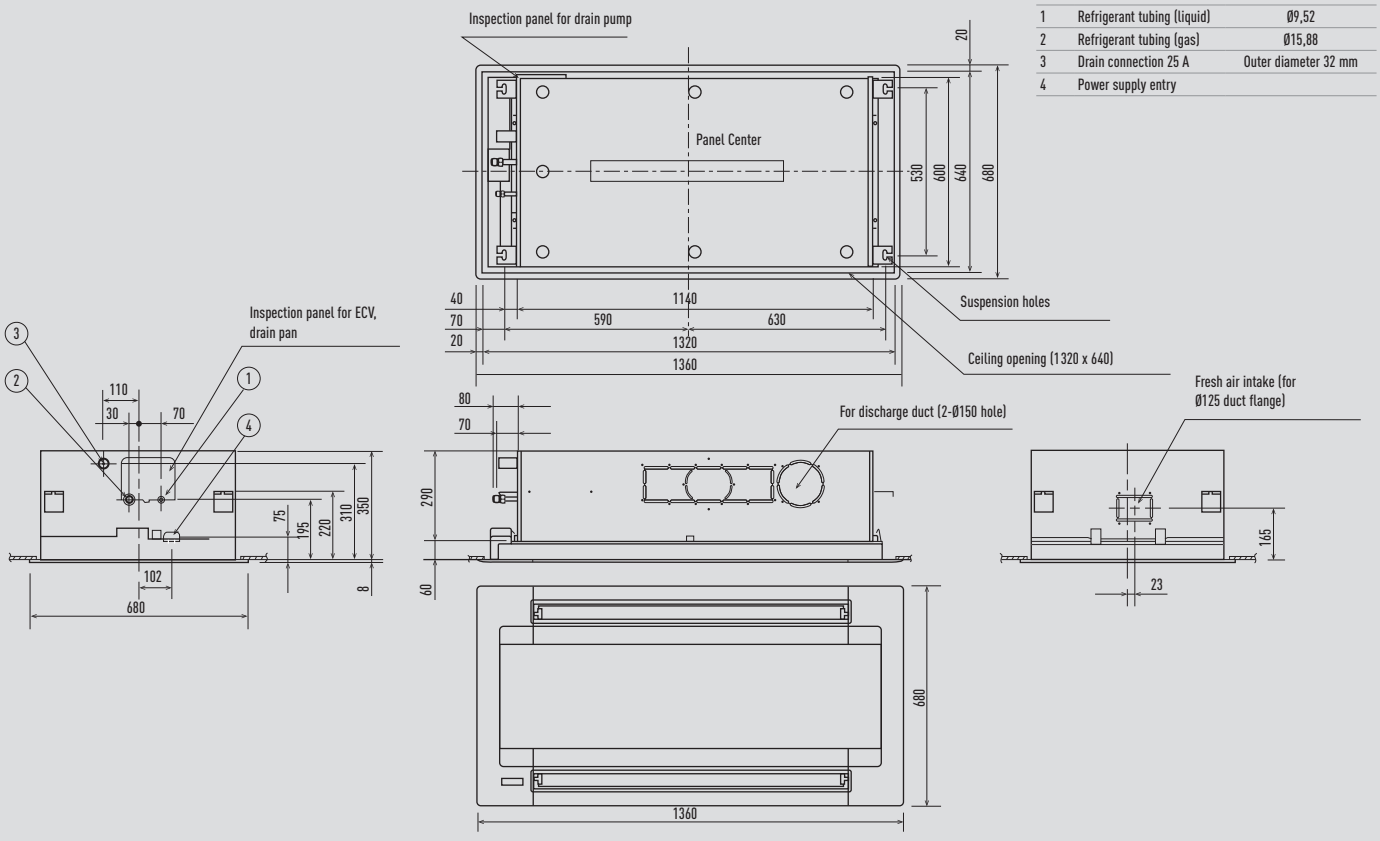

1	Refrigerant tubing (liquid)	Ø9,52
2	Refrigerant tubing (gas)	Ø15,88
3	Drain connection 25 A	Outer diameter 32 mm
4	Power supply entry	

Unit: mm

D1 Type 1 Way Cassette

		28-56	73
1	Air intake grille		
2	Discharge outlet		
3	Refrigerant tubing (liquid)	Ø6,35 (flared)	Ø9,52 (flared)
4	Refrigerant tubing (gas)	Ø12,70 (flared)	Ø15,88 (flared)
5	Drain tube connection port VP25	Outer diameter32	
6	Power supply entry		
7	Discharge duct connection port (for descending ceiling)		
8	Fresh air intake duct connection port	Ø100	
9	Installation port for wireless remote controller receiver		
10	Suspension bolt hole	4-12 x 30 mm	

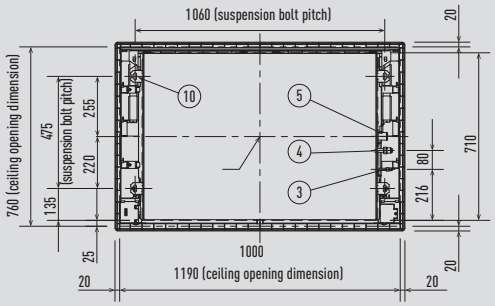

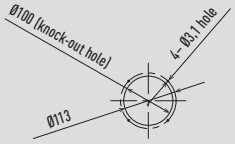

Fresh air intake duct connection port (detail)

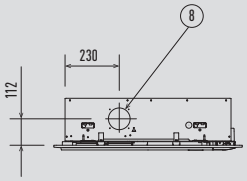

Required space for installation

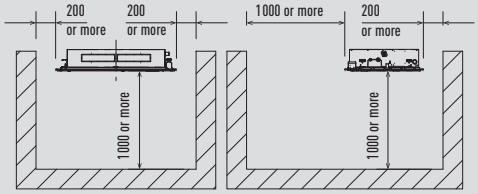

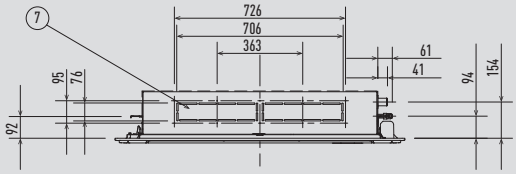

Front view

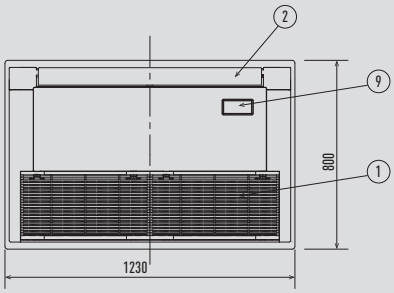

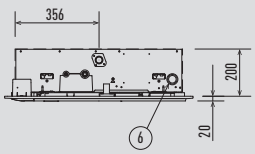

Unit: mm

M1 Type Slim Variable Static Pressure Hide Away

1	Refrigerant piping (narrow tube)	
2	Refrigerant piping (wide tube)	
3	Upper and bottom drain port	Outer diameter 26 mm
4	Suspension lug	
5	Power supply outlet	2- Ø30
6	Flange for air intake duct	
7	PL cover	
8	Electrical component box	
9	Frame filter	
10	Signal output board	ACC-SG-AGB: optional

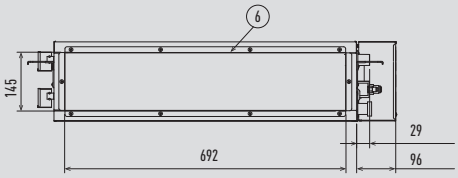

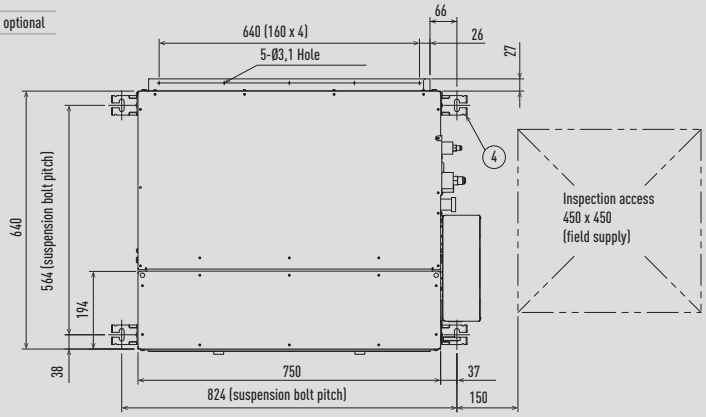

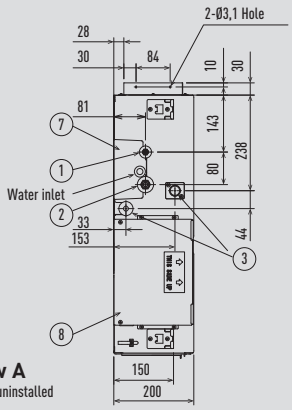

View A
Frame filter uninstalled

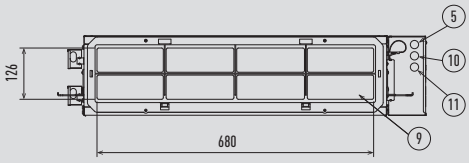

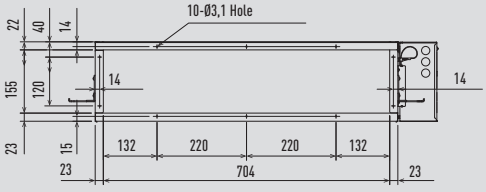

Unit: mm

F2 Type Variable Static Pressure Hide Away

S-15MF2E5A / S-22MF2E5A / S-28MF2E5A / S-36MF2E5A / S-45MF2E5A / S-56MF2E5A

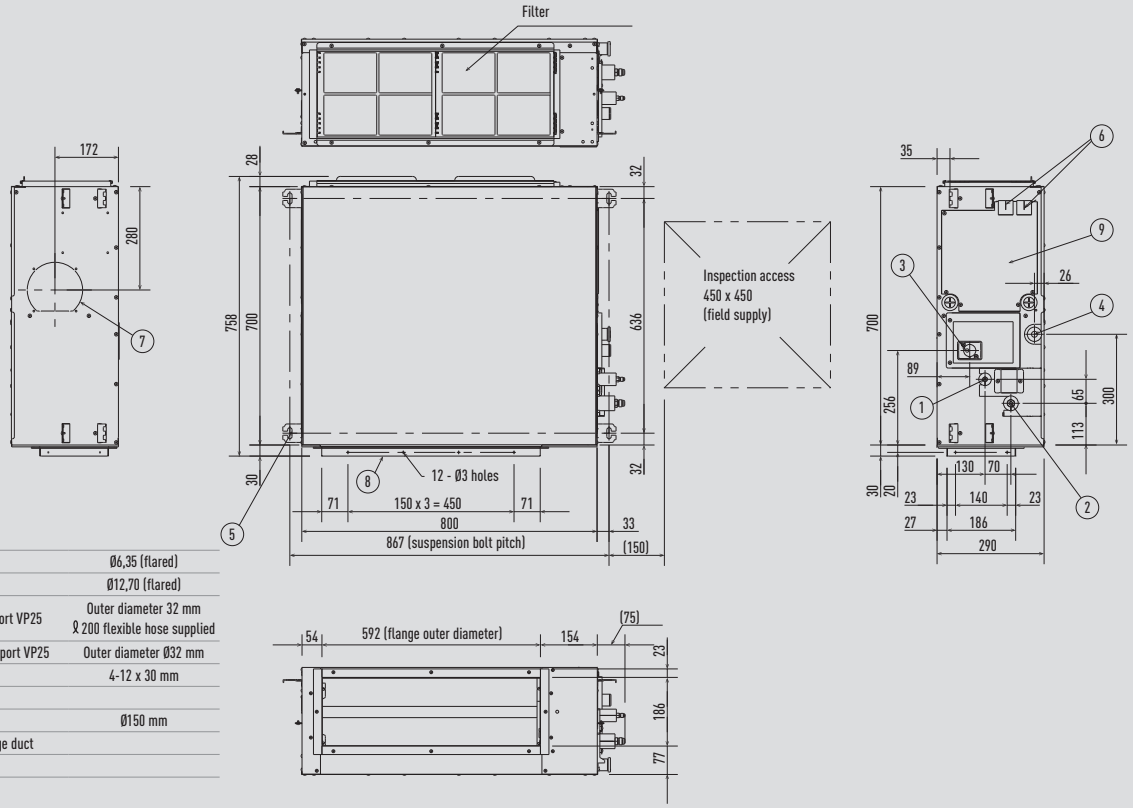

1	Refrigerant tubing (liquid)	Ø6,35 (flared)
2	Refrigerant tubing (gas)	Ø12,70 (flared)
3	Upper drain tube connection port VP25	Outer diameter 32 mm ℓ 200 flexible hose supplied
4	Bottom drain tube connection port VP25	Outer diameter Ø32 mm
5	Suspension lug	4-12 x 30 mm
6	Power supply outlet	
7	Fresh air intake port	Ø150 mm
8	Flange for flexible air discharge duct	
9	Electrical component box	

S-60MF2E5A / S-73MF2E5A / S-90MF2E5A

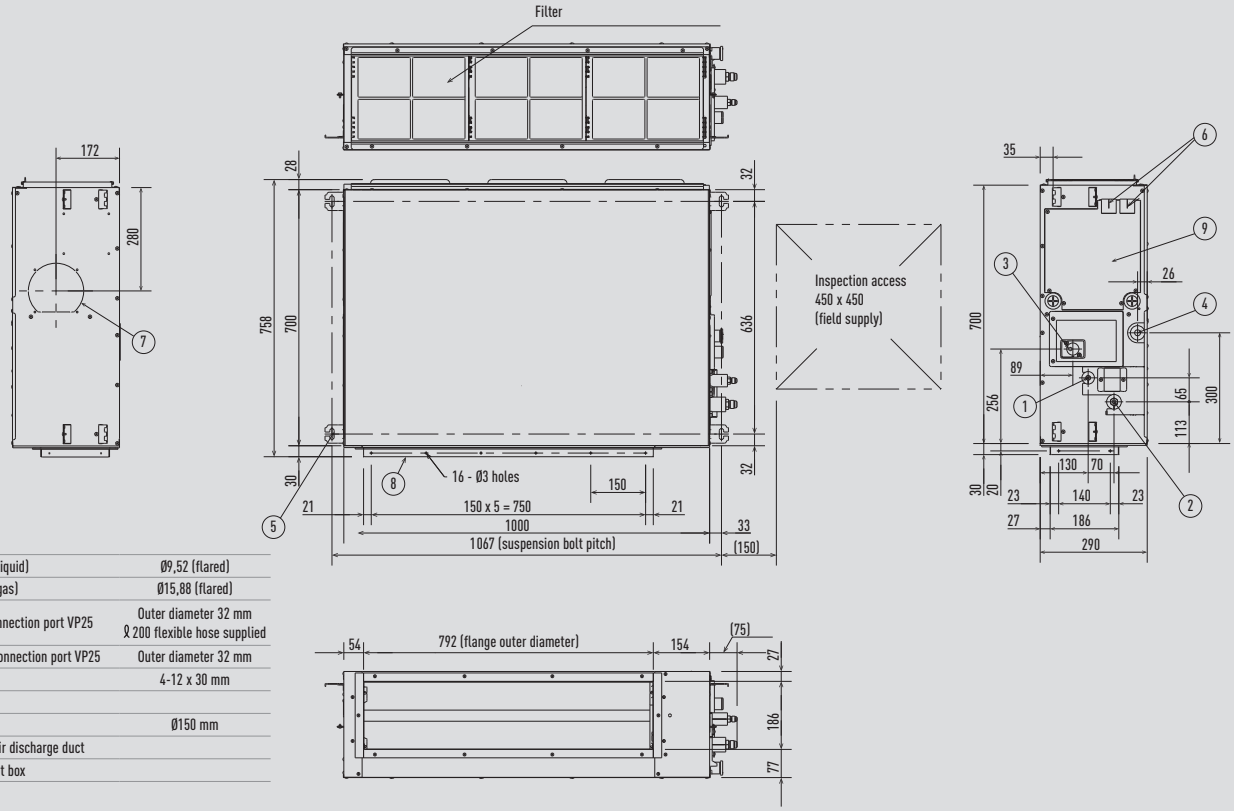

1	Refrigerant tubing (liquid)	Ø9,52 (flared)
2	Refrigerant tubing (gas)	Ø15,88 (flared)
3	Upper drain tube connection port VP25	Outer diameter 32 mm ℓ 200 flexible hose supplied
4	Bottom drain tube connection port VP25	Outer diameter 32 mm
5	Suspension lug	4-12 x 30 mm
6	Power supply outlet	
7	Fresh air intake port	Ø150 mm
8	Flange for flexible air discharge duct	
9	Electrical component box	

Unit: mm

F2 Type Variable Static Pressure Hide Away

S-106MF2E5A / S-140MF2E5A / S-160MF2E5A

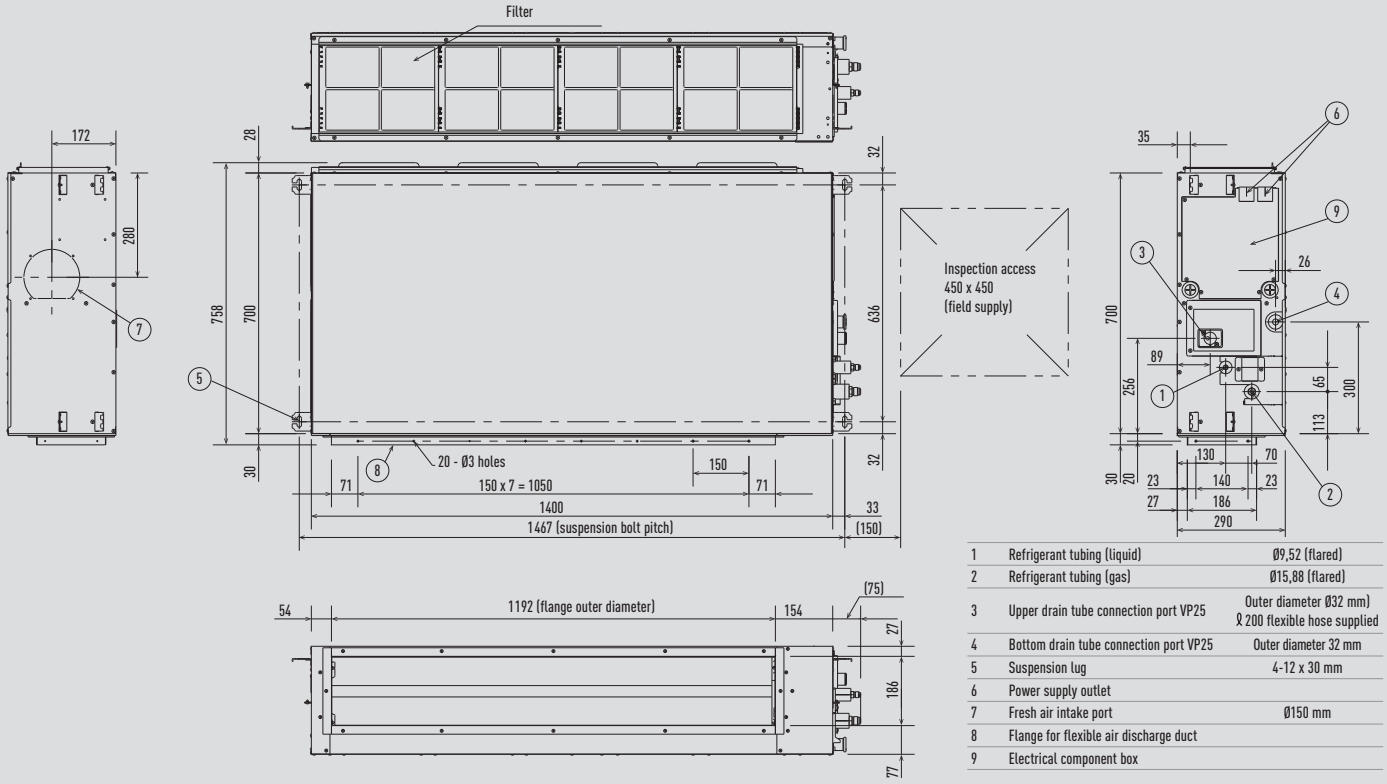

1	Refrigerant tubing (liquid)	Ø9,52 (flared)
2	Refrigerant tubing (gas)	Ø15,88 (flared)
3	Upper drain tube connection port VP25	Outer diameter Ø32 mm ℓ 200 flexible hose supplied
4	Bottom drain tube connection port VP25	Outer diameter 32 mm
5	Suspension lug	4-12 x 30 mm
6	Power supply outlet	
7	Fresh air intake port	Ø150 mm
8	Flange for flexible air discharge duct	
9	Electrical component box	

Unit: mm

E2 Type High Static Pressure Hide Away

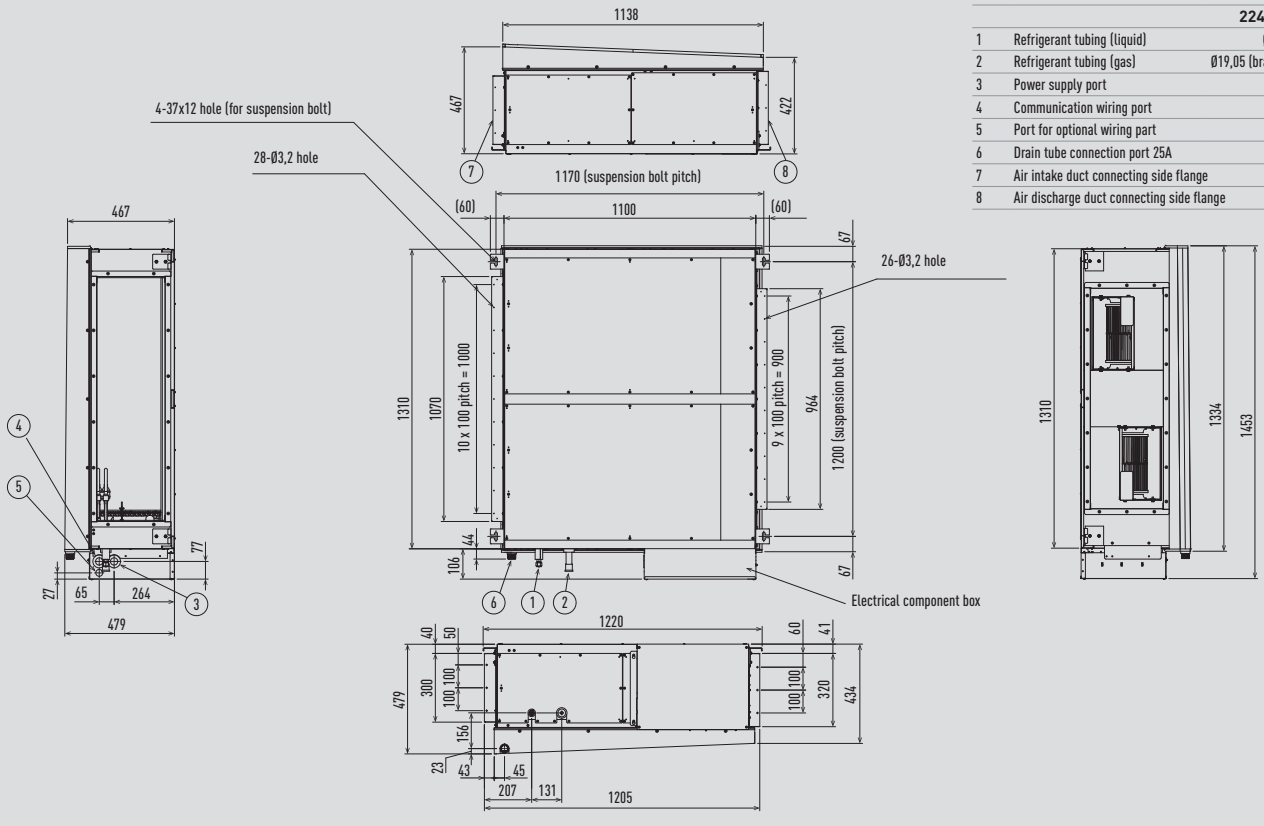

		224	280
1	Refrigerant tubing (liquid)	Ø9,52 (flared)	
2	Refrigerant tubing (gas)	Ø19,05 (brazing)	Ø22,22 (brazing)
3	Power supply port		
4	Communication wiring port		
5	Port for optional wiring part		
6	Drain tube connection port 25A		
7	Air intake duct connecting side flange		
8	Air discharge duct connecting side flange		

Unit: mm

T2 Type Ceiling

S-36MT2E5A / S-45MT2E5A / S-56MT2E5A

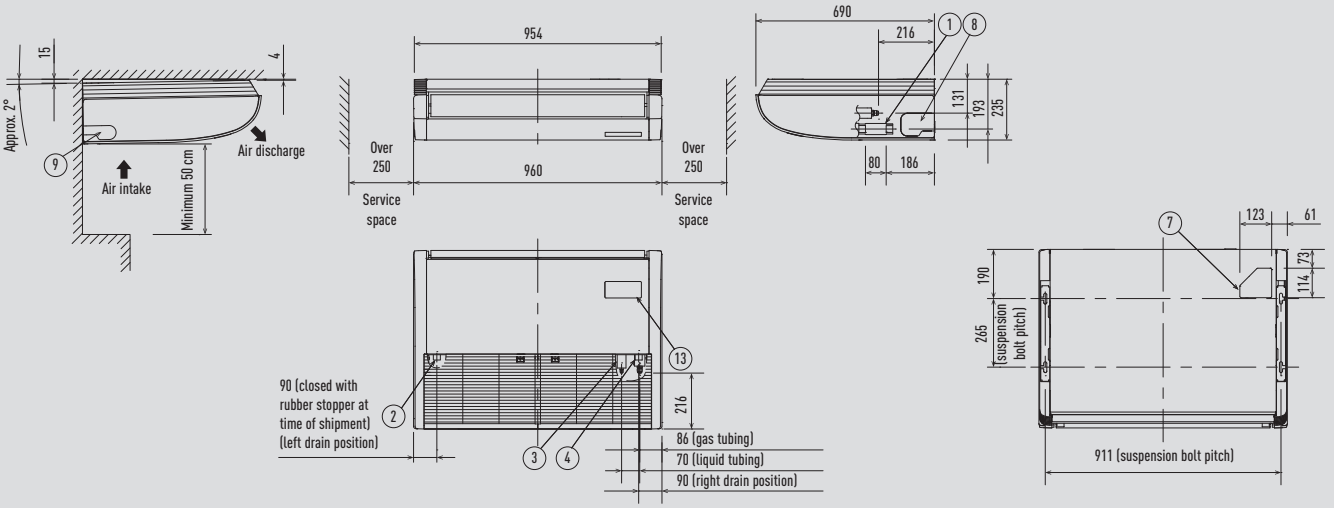

S-73MT2E5A

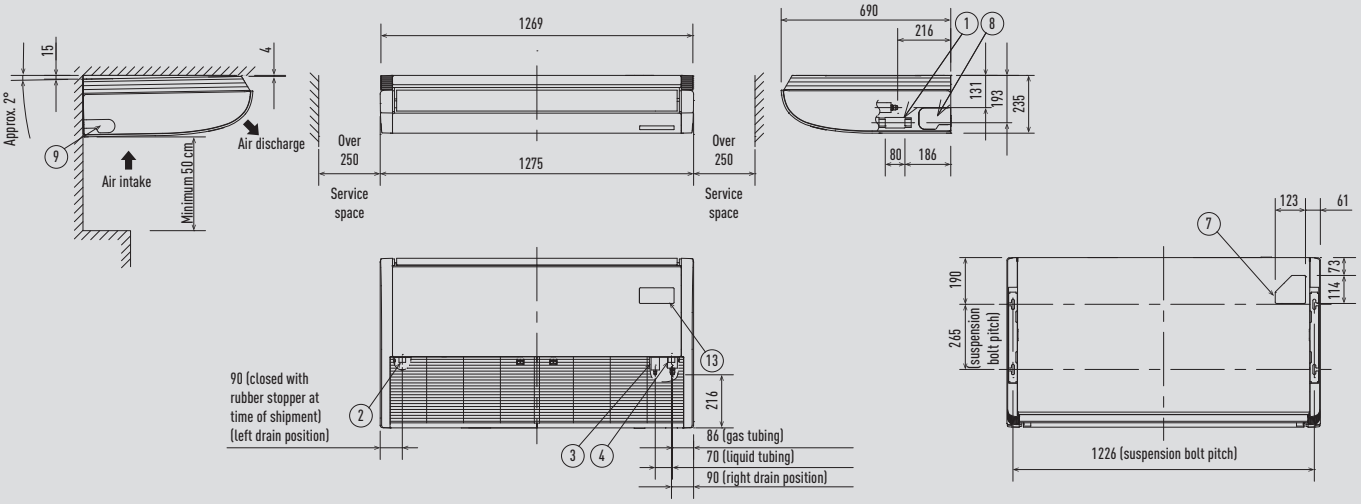

S-106MT2E5A / S-140MT2E5A

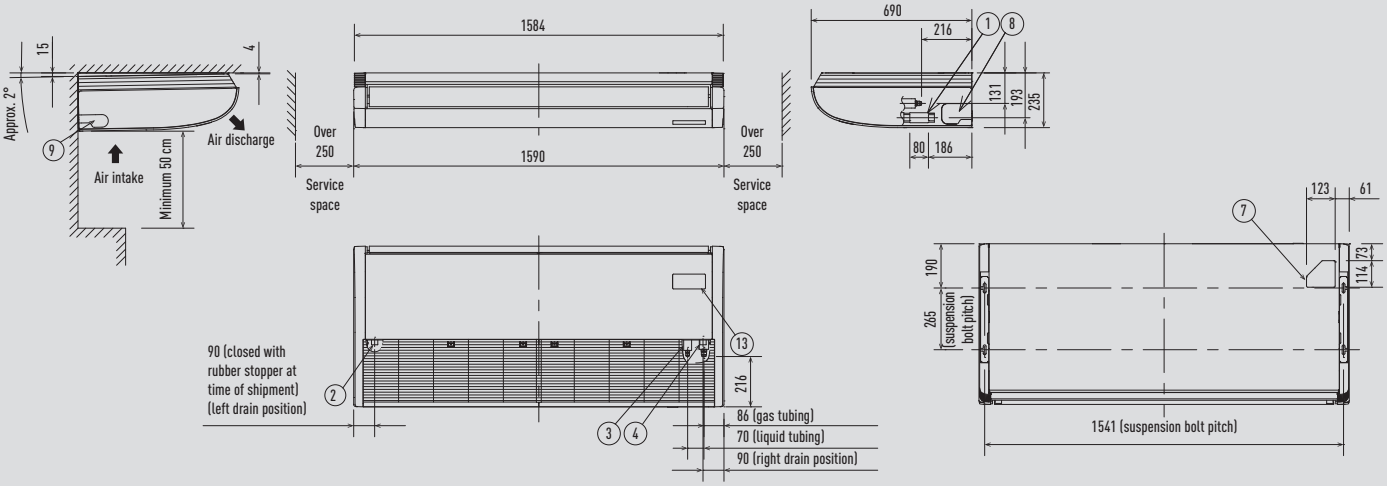

1	Drain tube connection port VP20	Inside diameter Ø26 mm, drain hose supplied	6	Tubing hole on wall surface	Ø100 mm
2	Left drain position		7	Upper side tubing port	
3	Refrigerant tubing (liquid)	Ø9,52 (flared)	8	Right side drain hose outlet port (cut out)	
4	Refrigerant tubing (gas)	Ø15,88 (flared)	9	Wireless remote controller receiver installation location	
5	Left side drain hose outlet port (cut out)				

Unit: mm

G1 Type Floor Console

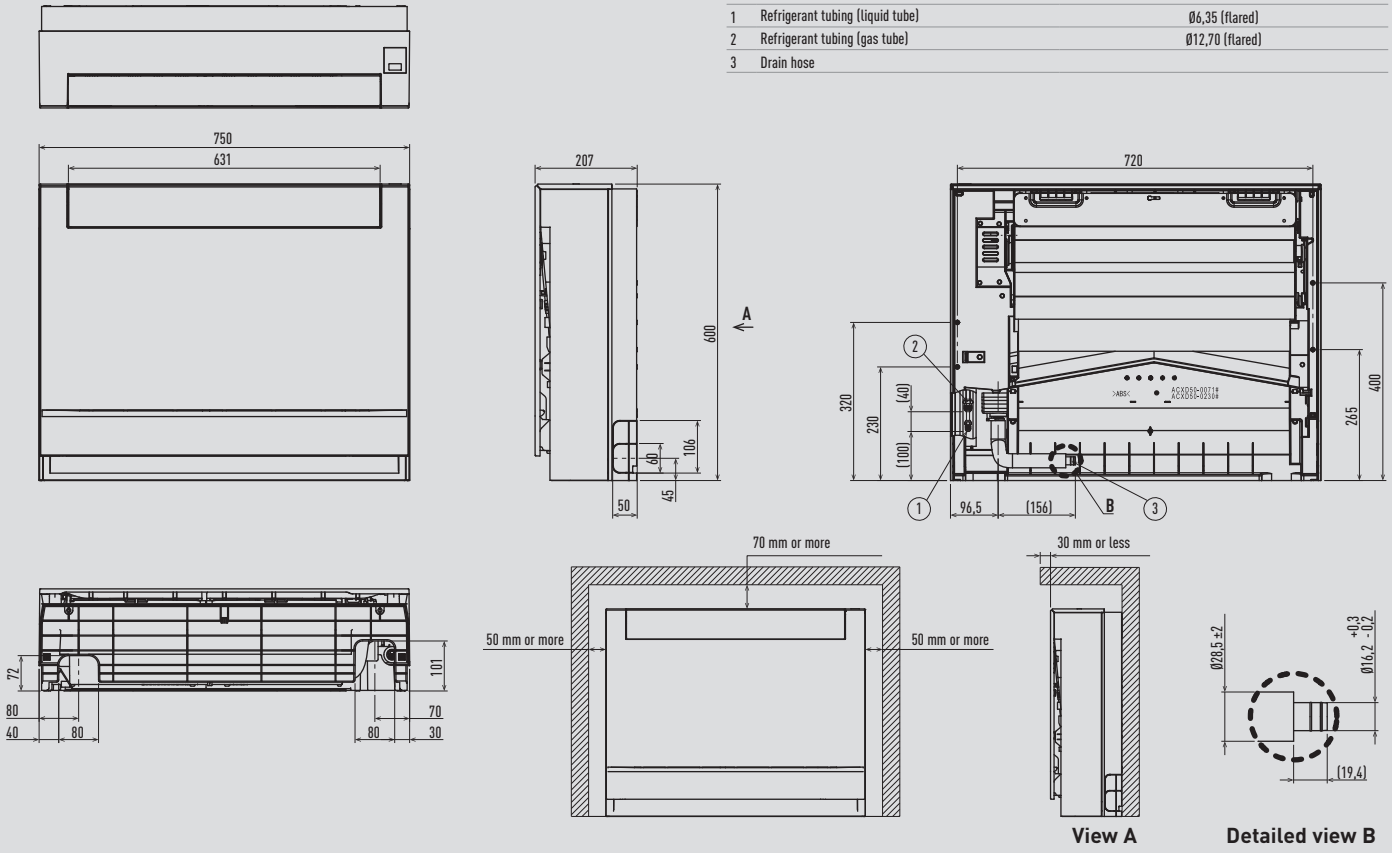

1	Refrigerant tubing (liquid tube)	Ø6,35 (flared)
2	Refrigerant tubing (gas tube)	Ø12,70 (flared)
3	Drain hose	

Unit: mm

P1 Type Floor Standing

1	4-Ø12 hole (for fastening the indoor unit to the floor with screws)
2	Air filter
3	Refrigerant tubing (liquid)
4	Refrigerant tubing (gas)
5	Level adjusting bolt
6	Drain tube connection port (20 A)
7	Power cord outlet (downward, rear)
8	Refrigerant piping outlet (downward, rear)
9	Location for mounting the remote controller (remote controller can be attached within the room)

	A	B	C	Liquid pipes	Gas pipes
22-36	1065	665	632	Ø6,35	Ø12,70
45	1380	980	947		
56					
71				Ø9,52	Ø15,88

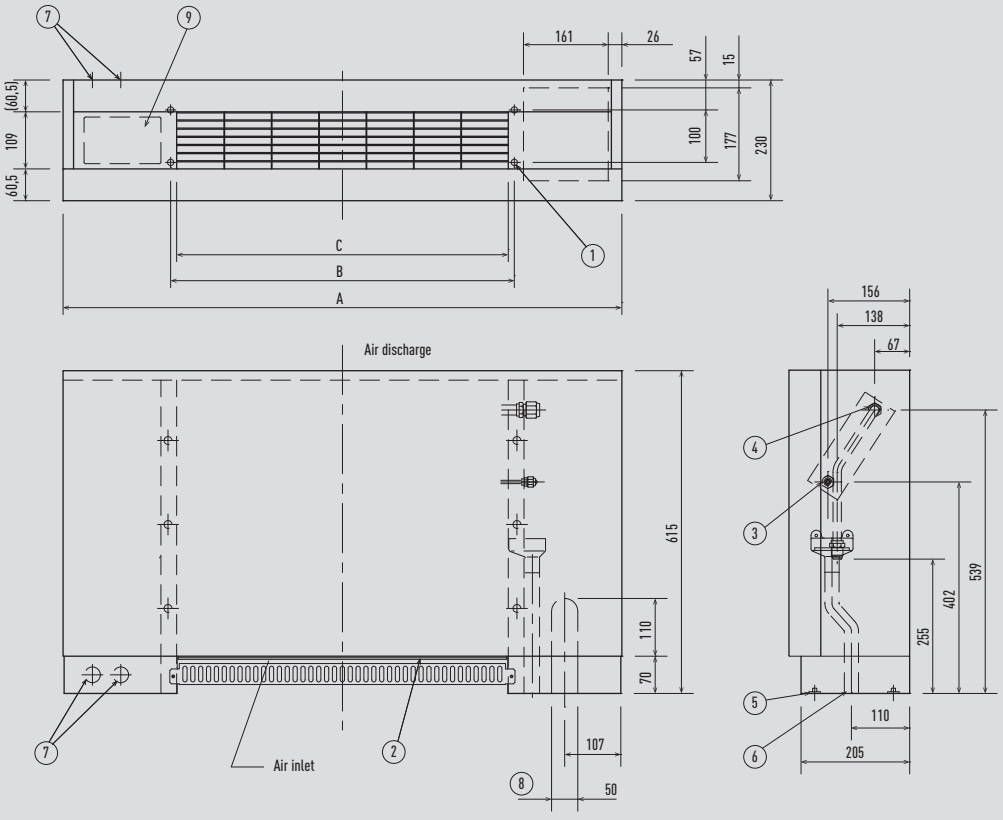

Unit: mm

K2 Type Wall Mounted

S-15MK2E5A / S-22MK2E5A / S-28MK2E5A / S-36MK2E5A

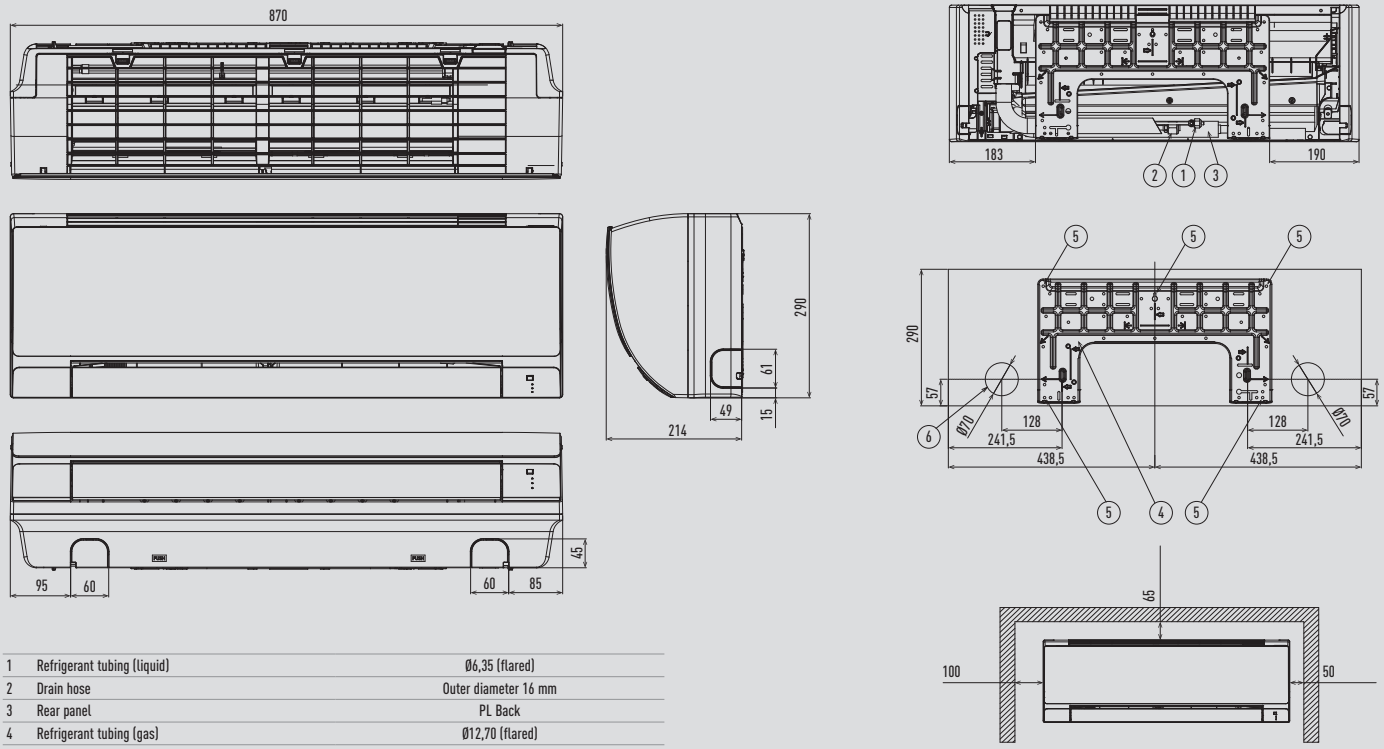

1	Refrigerant tubing (liquid)	Ø6,35 (flared)
2	Drain hose	Outer diameter 16 mm
3	Rear panel	PL Back
4	Refrigerant tubing (gas)	Ø12,70 (flared)
5	Rear panel fixing holes	
6	Piping and wiring holes	Ø70

S-45MK2E5A / S-56MK2E5A / S-73MK2E5A / S-106MK2E5A

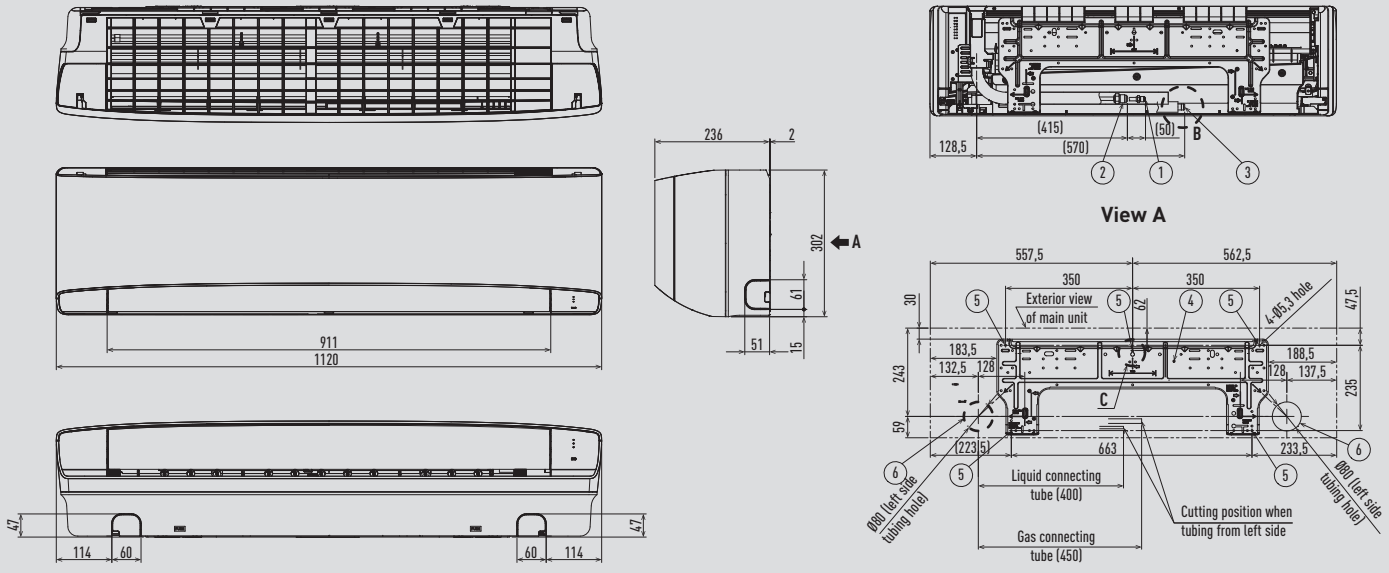

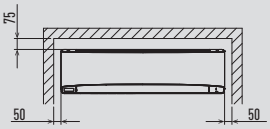

Minimum space requirements for installation

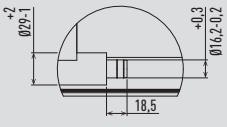

Detailed view B

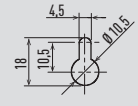

Detailed view C

Type		45-56	73-106
1	Refrigerant tubing (liquid)	Ø6,35 (flared)	Ø9,52 (flared)
2	Refrigerant tubing (gas)	Ø12,70 (flared)	Ø15,88 (flared)
3	Drain hose		
4	Rear panel		
5	Rear panel fixing holes (Ø5,3 holes or as shown in figure "C")		
6	Tubing and wiring holes (Ø80)		

Unit: mm

R1 Type Concealed Floor Standing

1	4-Ø12 hole (for fastening the indoor unit to the floor with screws)
2	Air filter
3	Refrigerant tubing (liquid)
4	Refrigerant tubing (gas)
5	Level adjusting bolt
6	Drain tube connection port (20 A)
7	Flange for the air-outlet duct

	A	B	C	D	E	F	Liquid pipes	Gas pipes
22-36	904	692	672	665	500	86		
45							Ø6,35	Ø12,70
56	1219	1007	1002	980	900	51		
71							Ø9,52	Ø15,88

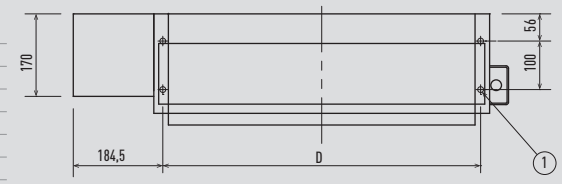

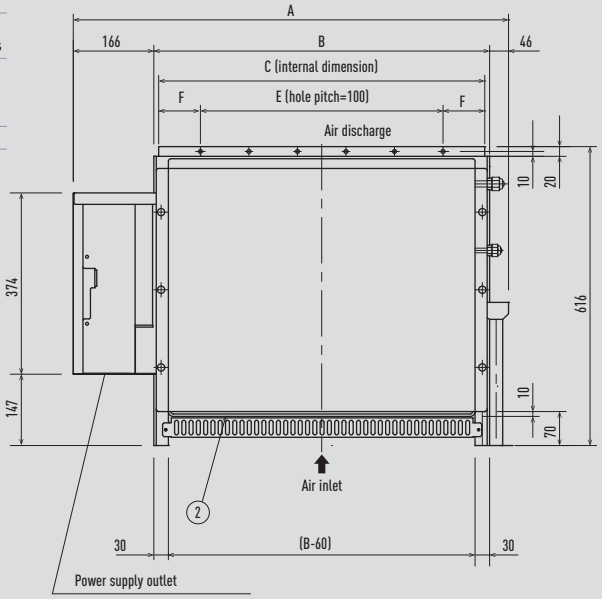

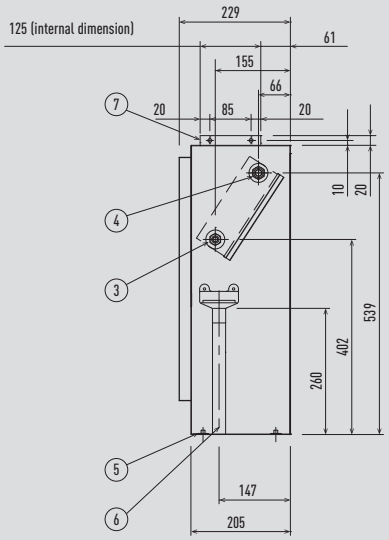

Unit: mm

Hydrokit for ECOi, water at 45 °C

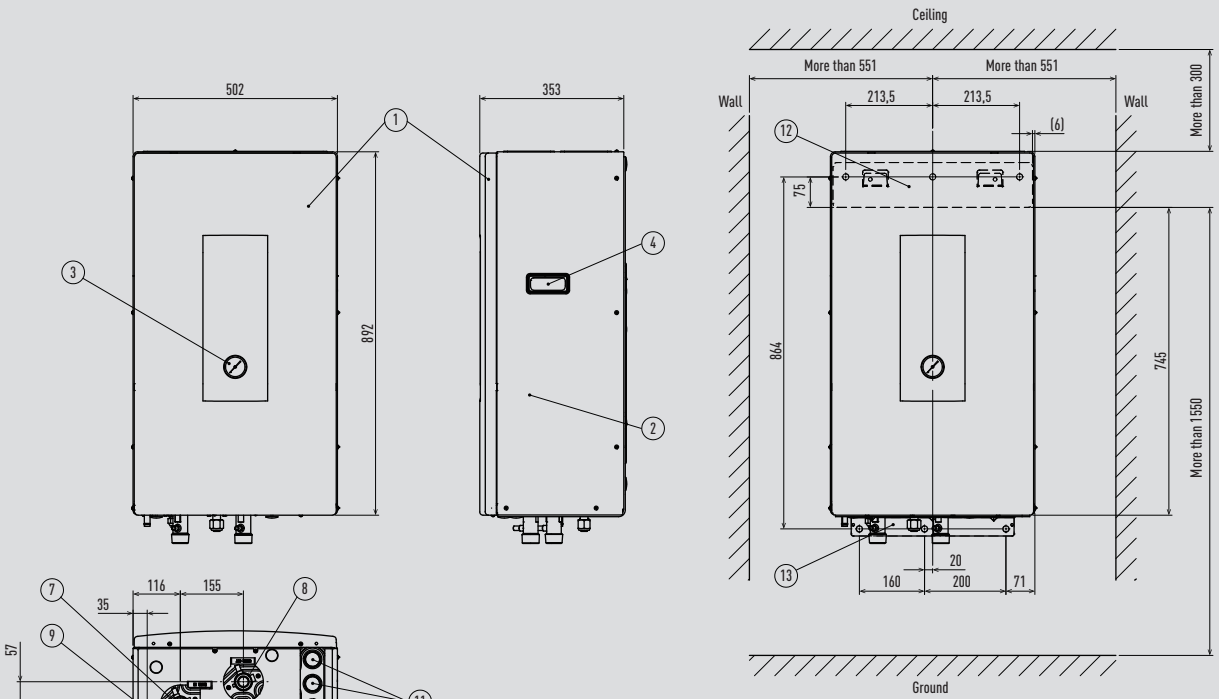

Unit: mm

PACi PRO-HT Tank

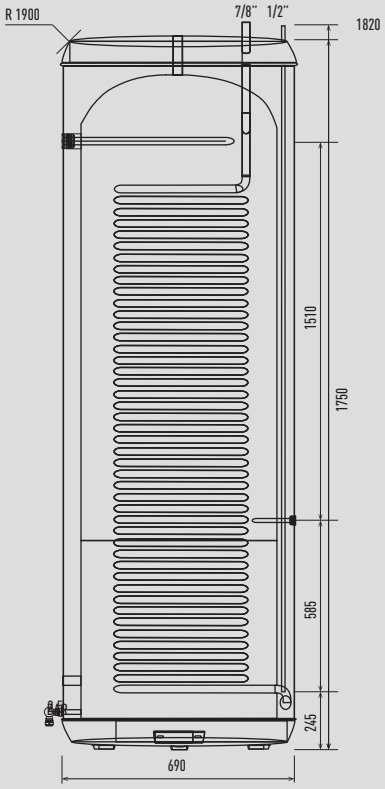

Note: R value indicates maximum overturning height.

Unit: mm

AHU Connection Kit

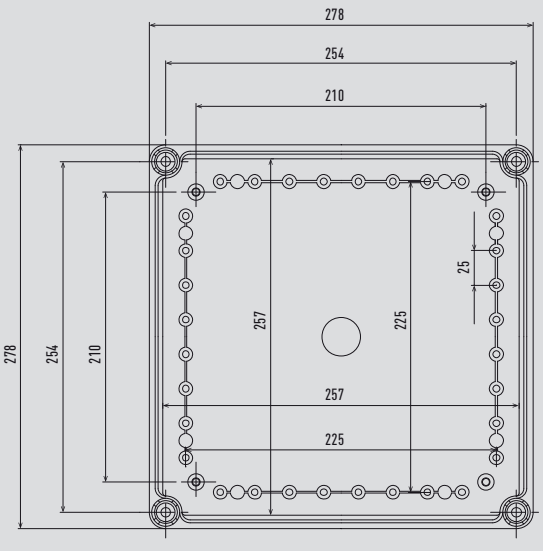

Front view (transparent cover removed)

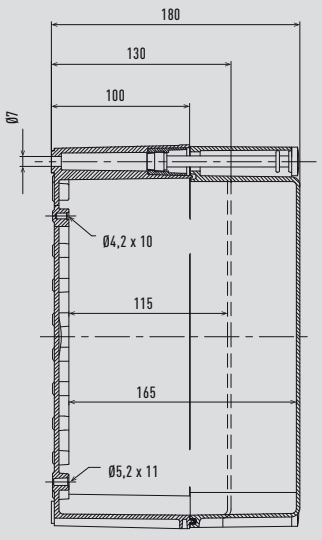

Side view

Unit: mm

Air Curtain with DX Coil

Top view

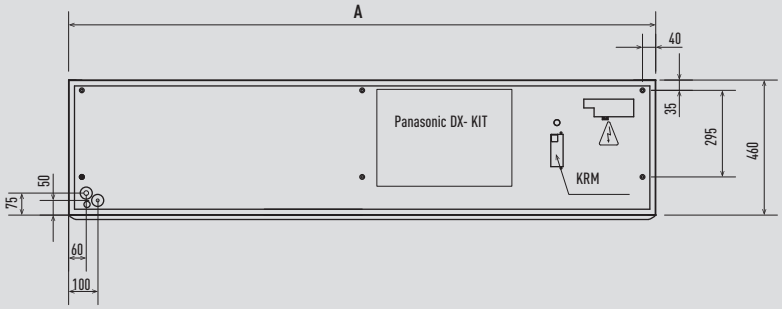

Side view

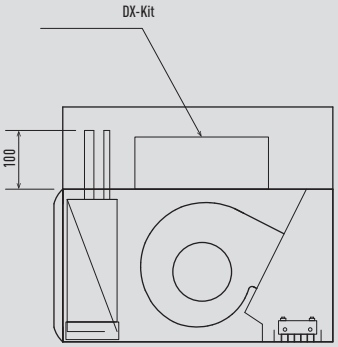

Front view

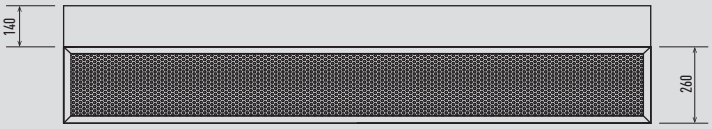

Bottom view

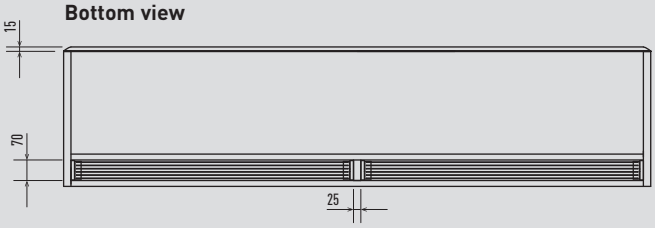

	PAW-10EAIRC-LS PAW-10EAIRC-HS	PAW-15EAIRC-LS PAW-15EAIRC-HS	PAW-20EAIRC-LS PAW-20EAIRC-HS	PAW-25EAIRC-LS PAW-25EAIRC-HS
A	1,0m	1,5m	2,0m	2,5m

Unit: mm

Energy Recovery Ventilation System

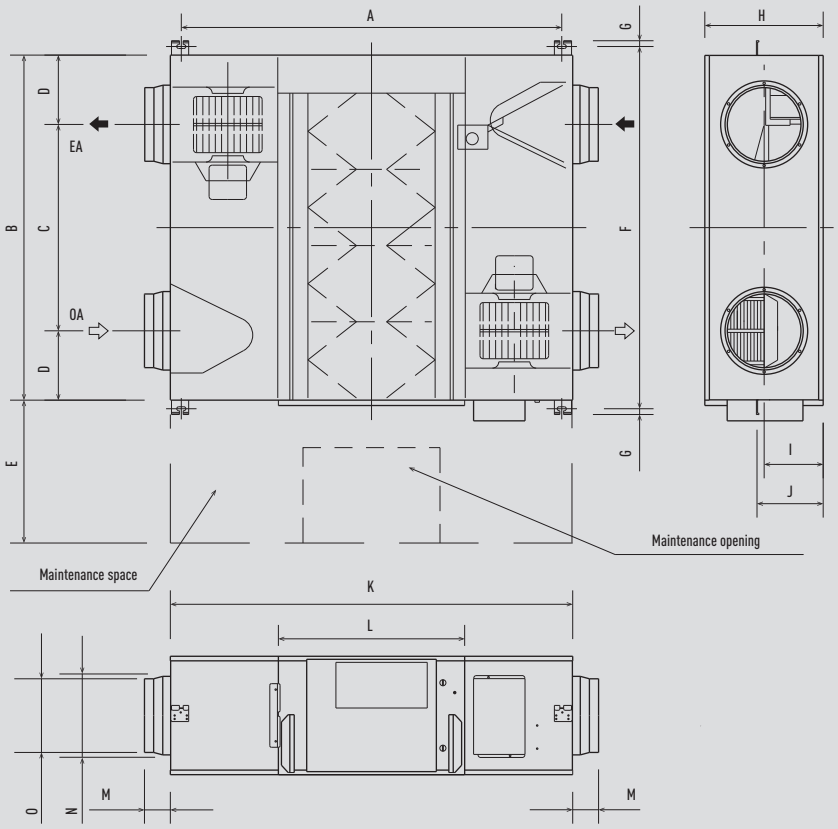

	FY-250ZDY8R	FY-350ZDY8R	FY-500ZDY8R	FY-800ZDY8R	FY-01KZDY8R
A	810	978	1018	1250	1250
B	599	804	904	884	1134
C	315	580	640	428	678
D	142	112	132	228	228
E	600	600	600	600	600
F	655	860	960	940	1190
G	19	19	19	19	19
H	270	317	317	388	388
I	135	159	159	194	194
J	159	182	182	218	218
K	882	1050	1090	1322	1322
L	414	470	470	612	612
M	95	70	70	85	85
N	164	164	210	258	258
O	144	144	194	242	242

Unit: mm

Heat Recovery with DX Coil

	A	B	C	D	E	E1	F	F1	G	L	T	K	M	N	P	R	S	Y	Z	Net weight
PAW-500ZDX3N	904	1400	107	200	825	1395	960	830	19	955	500	135	270	350	135	135	202	350	135	90 - 98
PAW-800ZDX3N	1134	1695	85	250	1115	1685	1190	1060	19	1200	678	170	388	500	170	170	228	415	195	100 - 110
PAW-01KZDX3N	1216	1700	85	250	1130	1700	1273	1140	19	1290	621	171	388	550	146	241	151	415	195	105 - 120

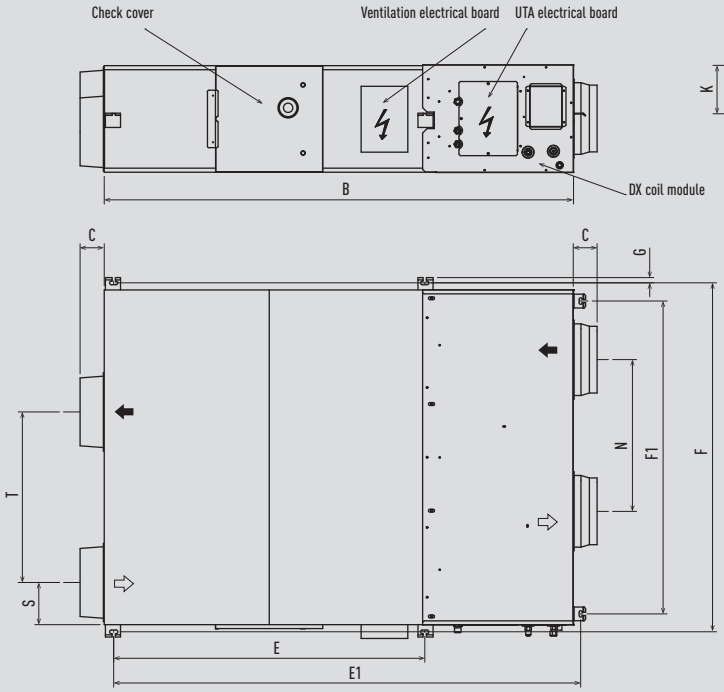

External side view

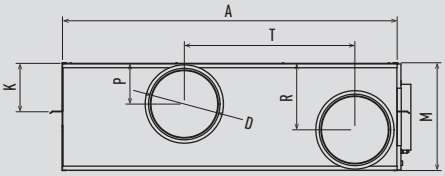

DX module view

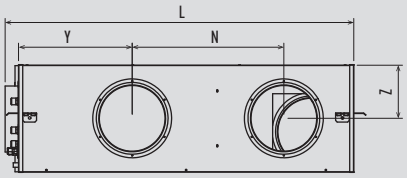

Unit: mm

Room controller for SE8000

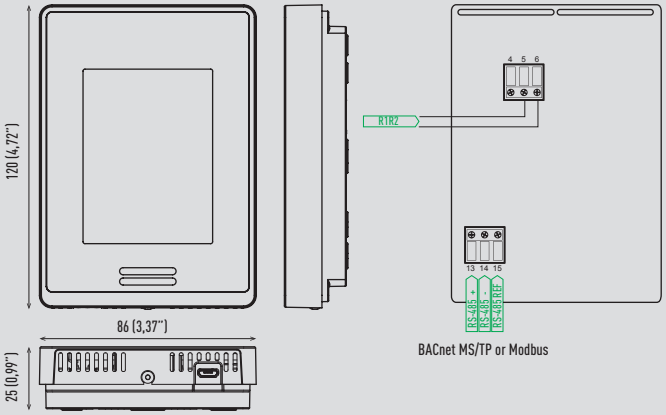

Check with your local government for instruction on disposal of these products.

THIS PRODUCT FOR COMMERCIAL USE ONLY.

Dimensions:
Height: 12 cm/4,72 in.
Width: 8,6 cm/3,39 in.
Depth: 2,7 cm/1,06 in.

Power requirements:
16 Vdc from Panasonic R-R IDU connectors.
50/60 Hz, 4 VA, Class 2 Supply.

Range from indoor unit:
Recommended 500 ft (150 m).

Operating conditions:
0 °C to 50 °C (32 °F to122 °F).
0% to 95% R.H. non-condensing.

Storage conditions:
-30 °C to 50 °C (-22 °F to 122 °F).
0% to 95% R.H. non-condensing.

Temperature sensor:
Local 10 K NTC type 2 thermistor.

Temperature sensor resolution:
± 0,1 °C (± 0,2 °F).

Temperature sensor accuracy:
± 0,5 °C (± 0,9 °F) @ 21 °C (70 °F) typical calibrated.

Humidity sensor and calibration:
Single point calibrated bulk polymer type sensor.

Humidity sensor precision:
Reading range from 10% to 90% R.H. non-condensing.
10% to 20% precision: 10%.
20% to 80% precision: 5%.
80% to 90% precision: 10%.

Humidity sensor stability:
Less than 1,0% yearly (typical drift).

Wiring:
Maximum wire length between last indoor unit to SER8150RxB1194 equals 490 ft (150 m) with AWG #18 wire (0,82 mm²).
Refer to Panasonic VRF guidelines "Wiring system diagram for remote controller" for this limitation.

Approximate shipping weight:
0,34 kg (0,75 lb)

Unit: mm

Wall/ceiling wireless sensor SED-MTH-G-5045

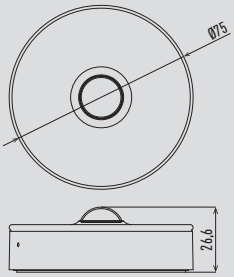

Certification

Check with your local government for instruction on disposal of these products.

Dimensions:
70 mm diameter x 26,6 mm.

Colour:
White.

Weight:
59 g.

Communication:
ZigBee 3,0 HA.

Detection range:
Ceiling: Ø4m (installation height 2,5 m).
Wall: R5m (installation height 1,2 m).

Battery voltage:
3 V.

Battery cell:
LR03 AAA (2 pcs).

Battery life:
Up to 5 years.

Ambient temperature:
-10 °C ~ +50 °C.

Door/window wireless sensor SED-WDC-G-5045

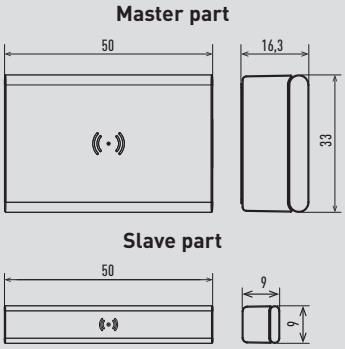

Certification

Check with your local government for instruction on disposal of these products.

Dimensions:
Master part: 50 x 33 x 16,3 mm.
Slave part: 50 x 9 x 9 mm.

Colour:
White / transparent.

Weight:
30 g

Communication:
ZigBee 3,0 HA.

Detection range:
Trigger 'close': wood 30 mm, metal 18 mm.
Trigger 'open': wood 32 mm, metal 20 mm.

Battery voltage:
3 V.

Battery cell:
CR2450.

Battery life:
Up to 5 years.

Ambient temperature:
-10 °C ~ +50 °C.

Unit: mm

CO_2 sensor SED-CO2-G-5045

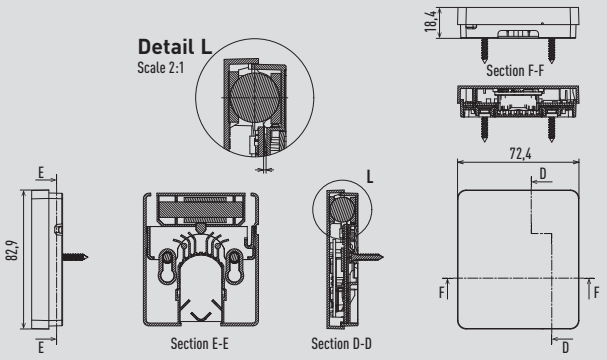

Certification

Check with your local government for instruction on disposal of these products.

Dimensions:
3,26 x 2,85 x 0,72 inches.
82,9 x 72,4 x 18,4 mm.

Operating temperature:
0 °C to 50 °C (32 °F to 122 °F).

Temperature accuracy:
±0,3 °C (0,54 °F) typical within operating range.

Humidity range:
0% to 100%.

Humidity accuracy:
± 3% RH (typical within 0% to 80% RH).

Measurement range:
0 to 5000ppm.

Measurement/Transmission intervals:
2,5 minutes (day), 10 minutes (evening).
Note: Battery life will be reduced should interval be shortened (i,e, using remote temperature/humidity functions).

CO_2 accuracy at NTP:
±60 ppm +3% of reading (400 - 2,000 ppm range).

Communication:
Zigbee 3,0 Green Power (encrypted, bi-directional).

Battery voltage:
3,6 V.

Battery cell:
AA Lithium ion.

Battery life:
10+ years (non-replaceable).
Note: Battery life can be reduced when sensor is operated at temperatures approaching the operating limits.

Ambient temperature:
-30 °C to 70 °C.

Unit: mm

Relay pack TE2

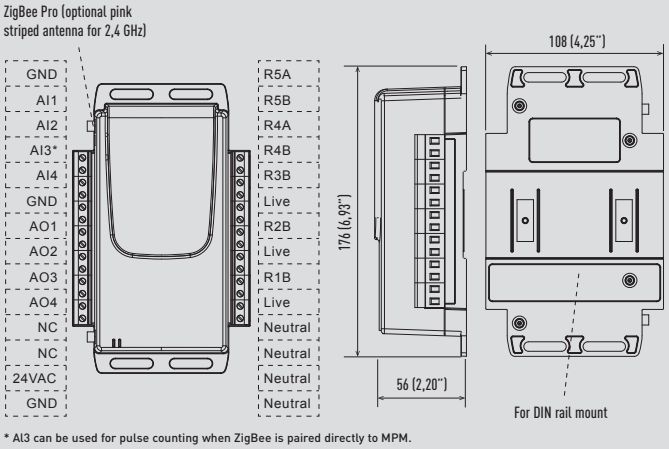

* AI3 can be used for pulse counting when ZigBee is paired directly to MPM.

Dimensions:
6,93 x 4,25 inches.
176 x 108 mm.

Voltage:
24 VAC; ± 15%; 50/60 Hz; Class 2.
24 VDC ± 10%.
115 VAC/230 VAC.

Typical consumption:
10 VA (115/230 VAC).
5 VA (24 V).

Inputs:
Pulse input: Support for one fast pulse input counting (up to 1000 Hz / 1 ms) – AI3.

Outputs:
Analog (x4): 0-12 V, nominal 50 mA maximum each, 12-bit resolution.
Relay (x5) (optional): Maximum 230 VAC, 5 A per relay.
First three relays (R1, R2 and R3) or based on input power voltage (24 V, 115 VAC or 230 VAC).
Two relays (R4 and R5) are independent of the input power voltage.
Analog (x1): 24 VAC, 2 VA (115 VAC and 230 VAC Voltage only models, one additional output).
(*20 VAC if used with 110 V 50 Hz).

ZigBee Pro range:
Frequency: 2400 to 2483,5 MHz, 16 RF channels.
Non line of sight to MPM: 50 ft/17 m.
Line of sight to MPM: 100 ft/30 m.

* Power supply is not included.

Certification

4001432

Check with your local government for instruction on disposal of these products.

Hotel room controller (HRC)

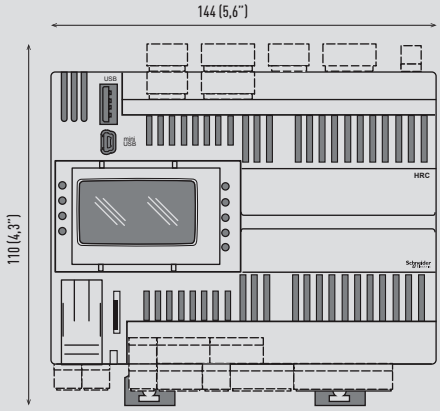

Dimensions:
5,6 x 4,3 x 2,4 inches.
144 x 110 x 60,5 mm.

Digital inputs:
12.

High voltage relay digital outputs:
10 x 3 A SPST +250 VAC relays.

Analog inputs:
2 x configurable analog inputs.
DI: voltage free DI, 10 kΩ input impedance.
0-20 mA: range 0,1000, < 150 Ω impedance.
0-10 V: range 0,1000 > 10 kΩ impedance.

Analog outputs:
6 x 0-10 V outputs, Load impedance > 700 Ω.

Supply voltage:
24 VAC + 10% NOT ISOLATED.
+20...38 Vdc NOT ISOLATED.

Supply frequency:
50/60 Hz.

Power cycle:
35 VA / 15 W.

Operating temperature:
-20 to 60 °C (-4 to 140 °F) conforming to UL 60730-1.

Storage temperature:
-30 to 70 °C (-22 to 158 °F).

* Power supply is not included.

Certification

Check with your local government for instruction on disposal of these products.

BEMS Gateway MPM

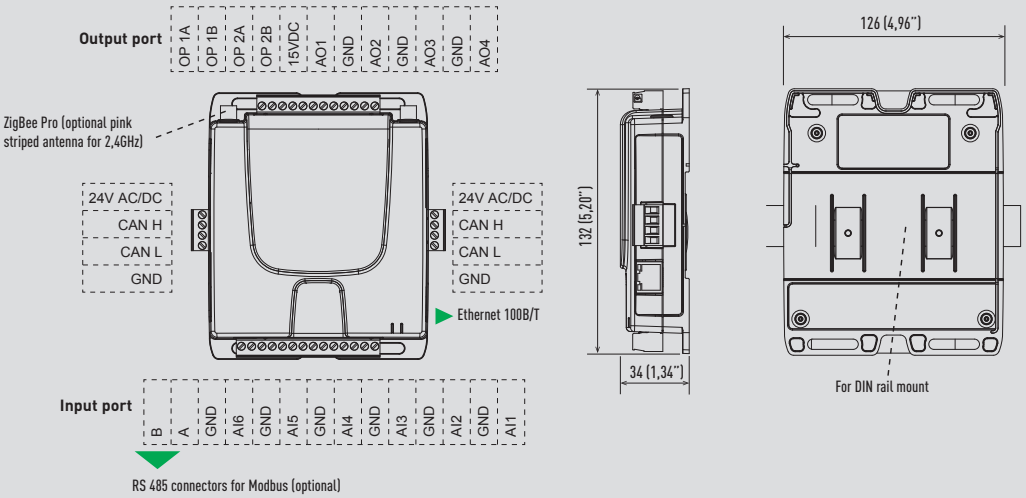

Dimensions:
5,20 x 4,96 inches.
132 x 126 mm.

Voltage:
24 VAC; ± 15%; 50/60 Hz.
24 VDC ± 10%.

Typical consumption communication:
5 VA + Output (VAC), 1,6 W + Output (VDC).
ZigBee Pro, EnOcean, BACnet.
CANbus (125-500 Kbps).
Ethernet (10/100 Mbps).

Analog inputs:
Current: 4-20 mA with 249 external resistor.
Voltage: 0-10 V.

Outputs:
Analog (x4): 0-12 V,nominal 50mAmax each, 12-bit resolution.
Relay (x2): 24 V, 1,1 Amp per relay.

RS485 (optional):
Supported protocols: Modbus.

ZigBee Pro (optional):
Frequency: 868 MHz, 902 MHz.

Certification

Check with your local government for instruction on disposal of these products.

CZ-CAPWFC1 WLAN Adaptor

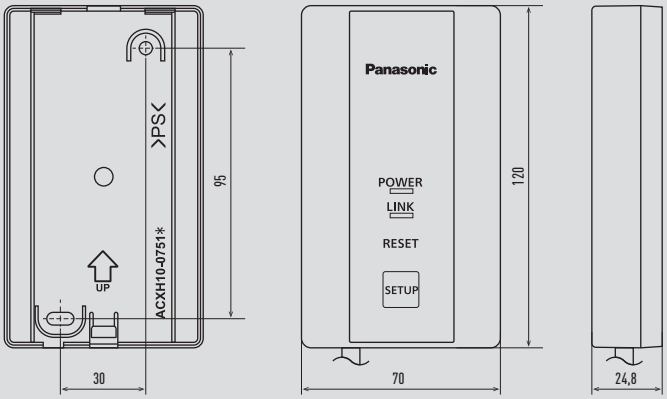

CZ-RTC6 / CZ-RTC6BL / CZ-RTC6BLW wired remote controller

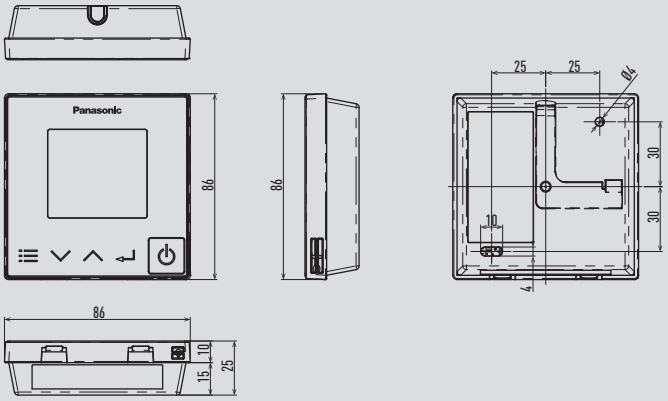

CZ-RTC5B design wired remote controller

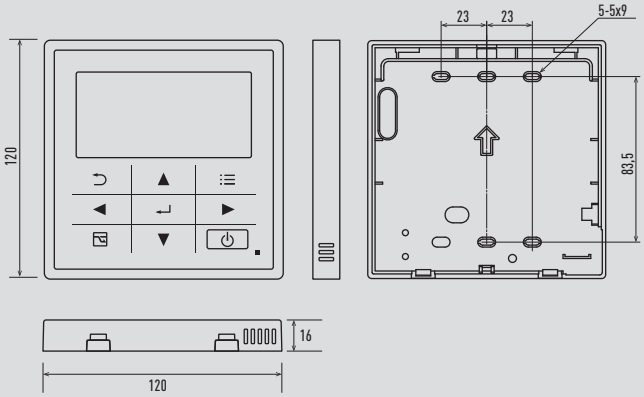

CZ-256ESMC3 Intelligent Controller (Touch screen panel)

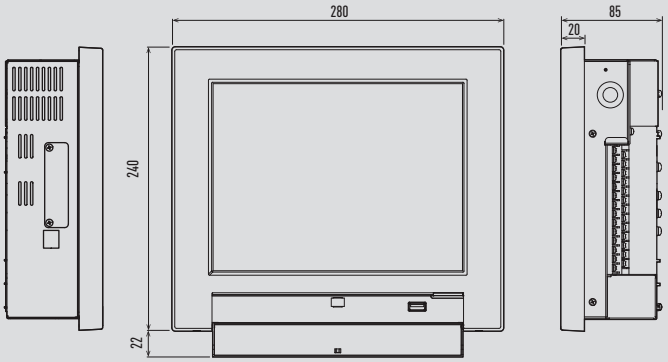

CZ-CENSC1 Econavi sensor

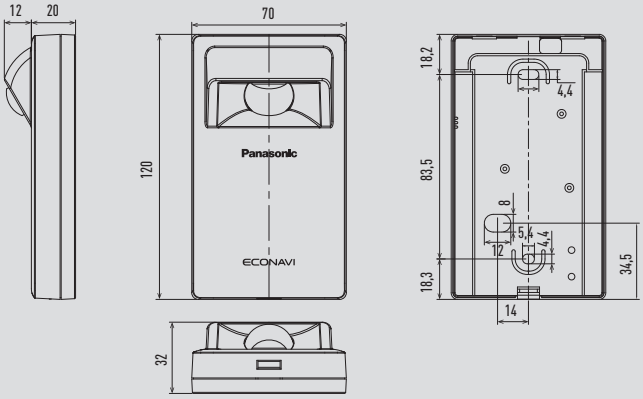

CZ-RTC2 wired remote controller

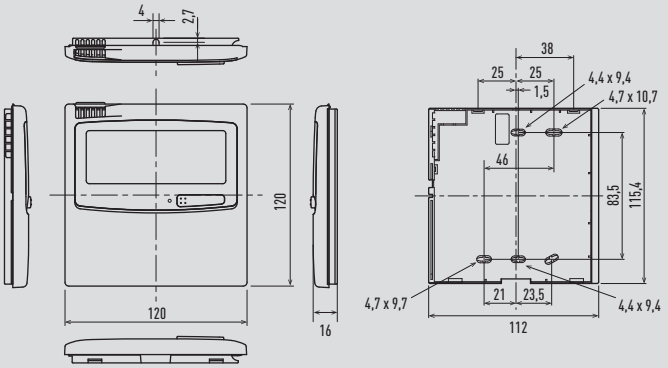

CZ-RWS3 infrared remote controller

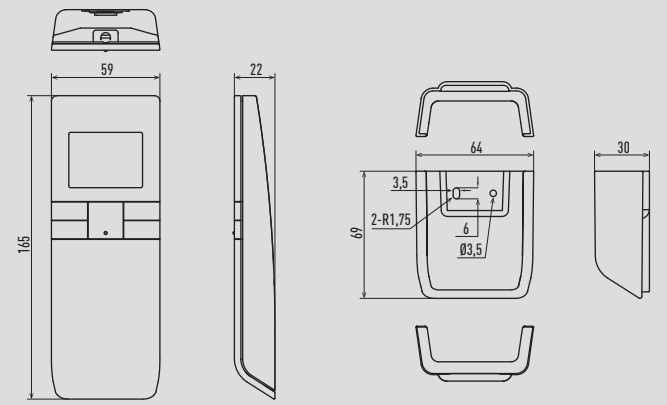

CZ-CSRC3 remote sensor

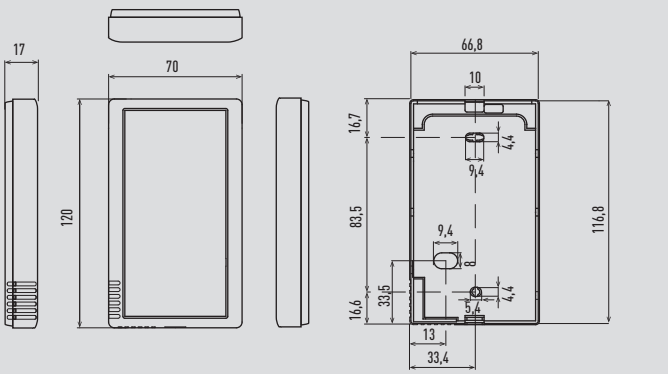

Unit: mm

CZ-64ESMC3 system Controller with Schedule timer

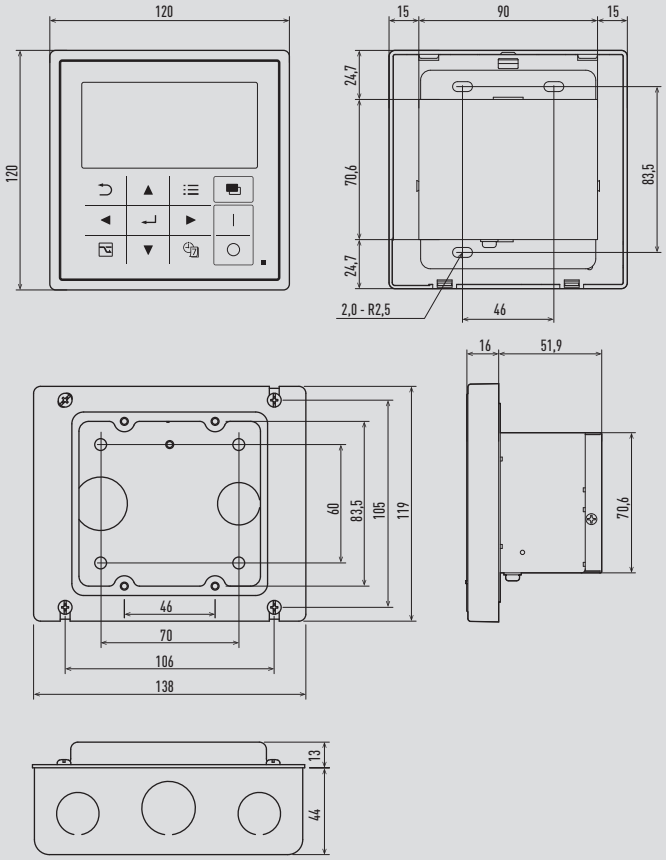

CZ-ANC3 ON/OFF Controller

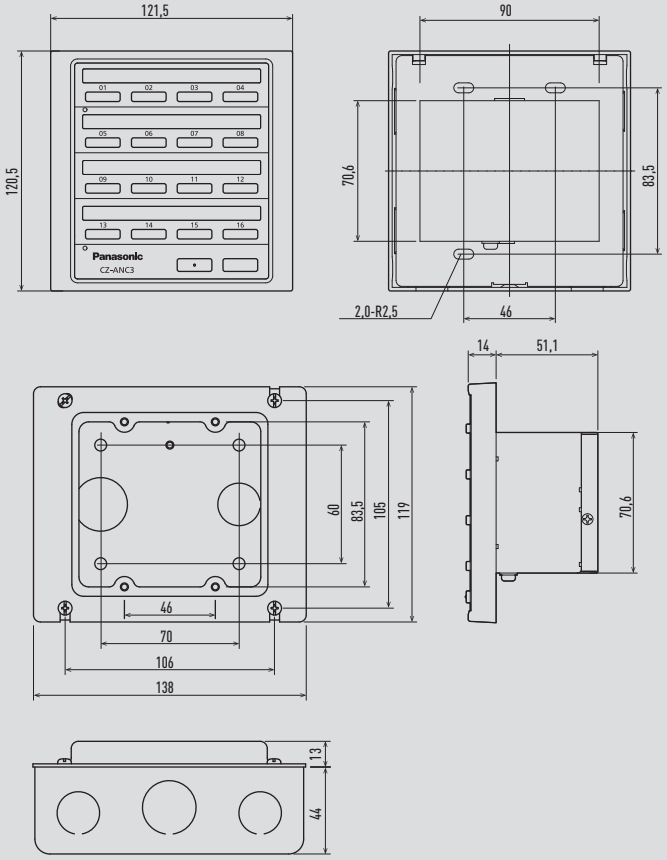

CZ-CAPDC2 Seri-Para I/O unit for outdoor unit

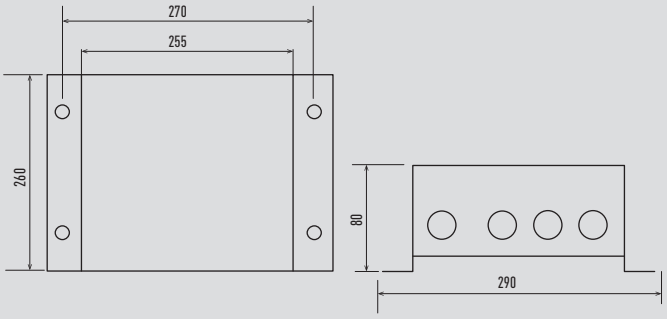

CZ-CAPC3 local adaptor for ON/OFF control

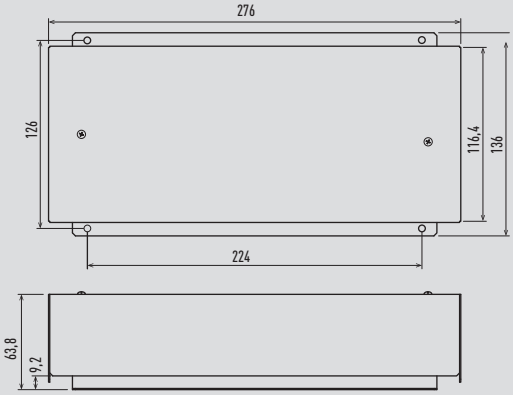

CZ-CAPBC2 Mini Seri-Para I/O Unit 0 -10 V

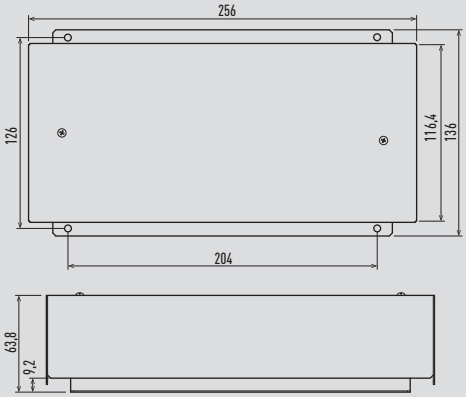

CZ-CFUNC2 communication adaptor

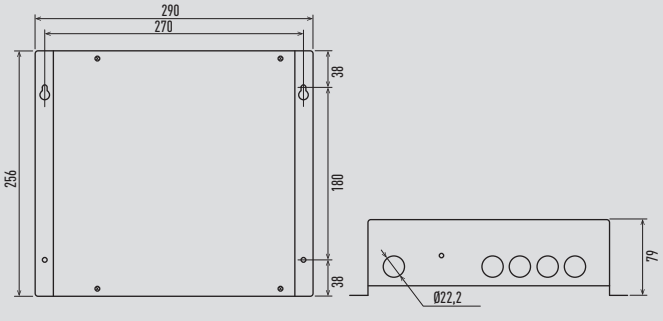

Unit: mm

ECOi-W 20 to 40 with condenser fans Standard

Front view

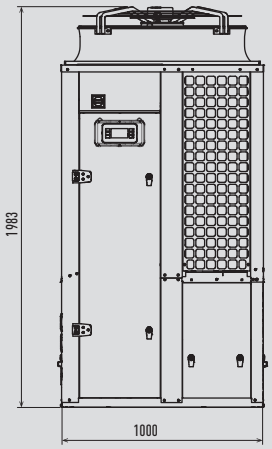

Side view

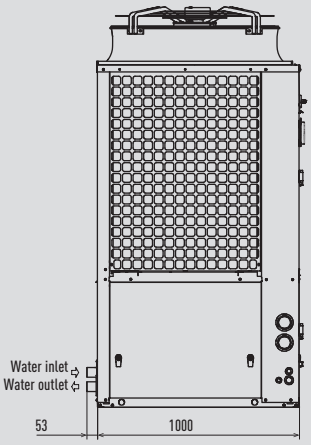

Rear view

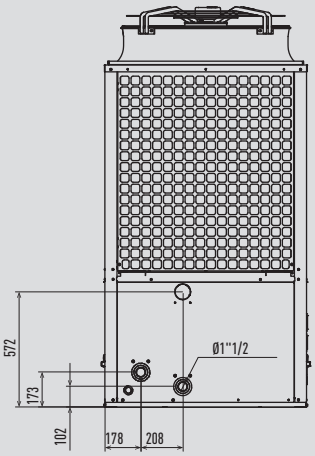

Top view

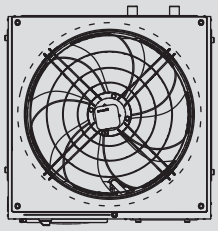

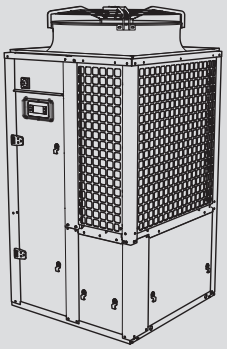

Bottom view

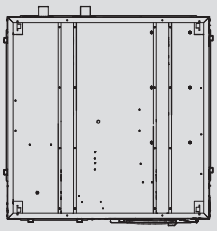

Unit: mm

ECOi-W 20 to 40 with condenser fans Standard and buffer tank

Side view

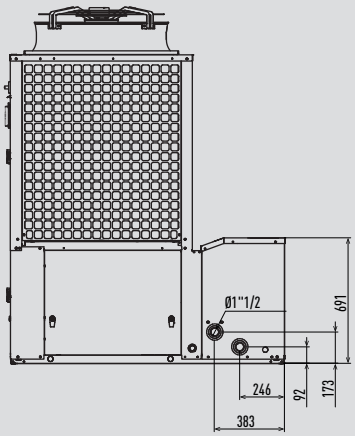

Front view

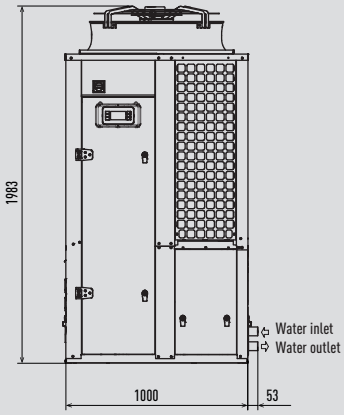

Side view

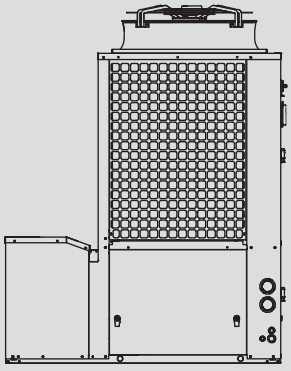

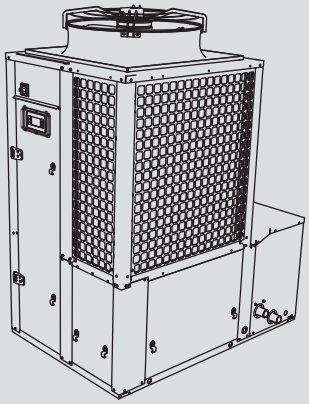

Top view

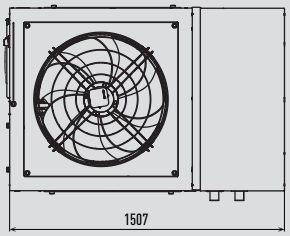

Bottom view

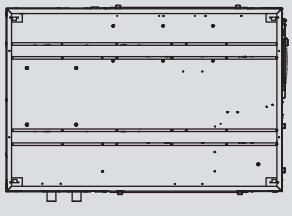

Unit: mm

ECOi-W 45 to 55 with condenser fans Standard

Side view

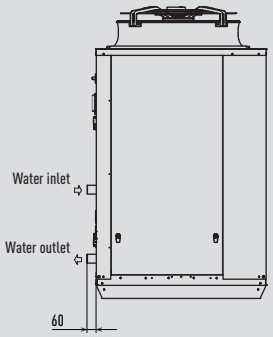

Front view

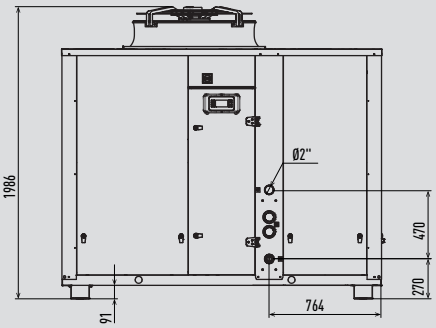

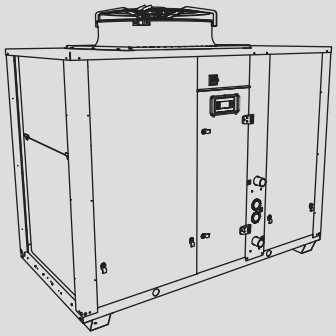

Top view

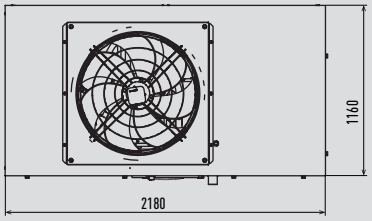

Bottom view

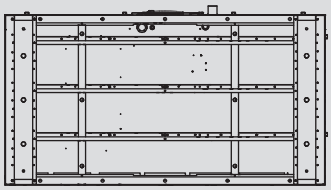

Unit: mm

ECOi-W 45 to 55 with condenser fans Standard and buffer tank

Side view

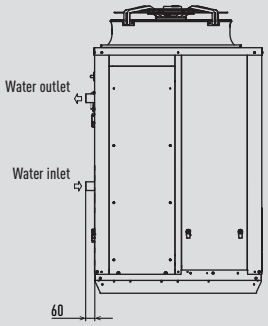

Front view

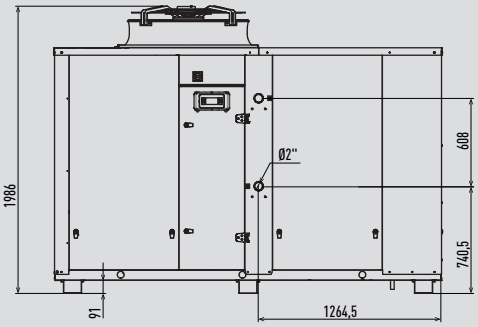

Top view

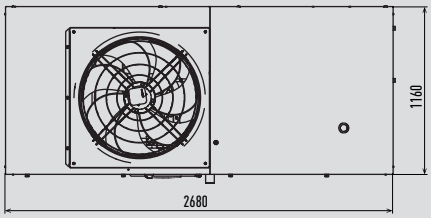

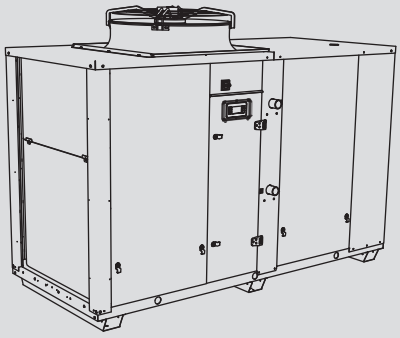

Bottom view

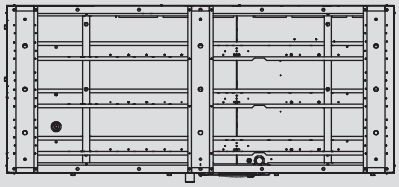

Unit: mm

ECOi-W 65 to 75 with condenser fans Standard

Side view

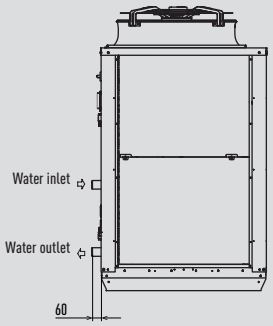

Front view

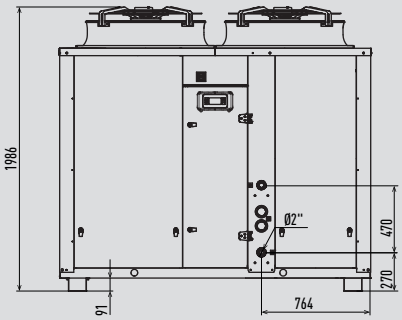

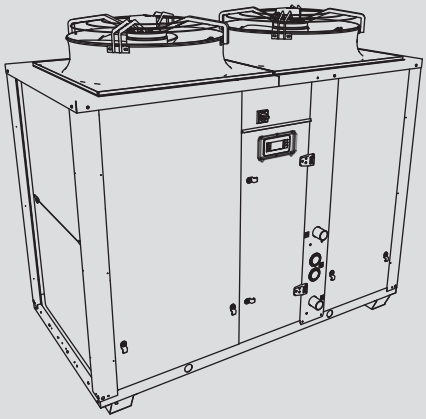

Top view

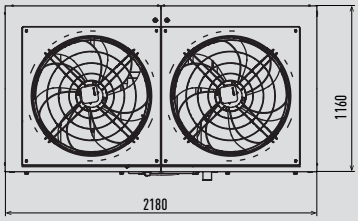

Bottom view

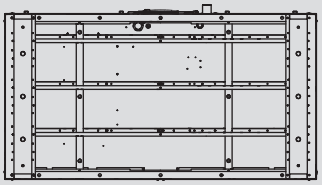

Unit: mm

ECOi-W 65 to 75 with condenser fans Standard and buffer tank

Side view

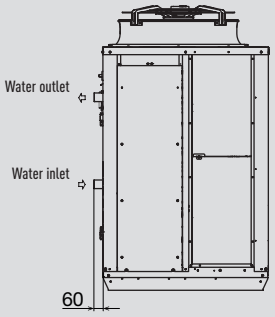

Front view

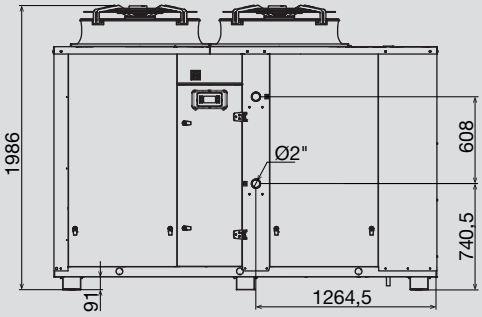

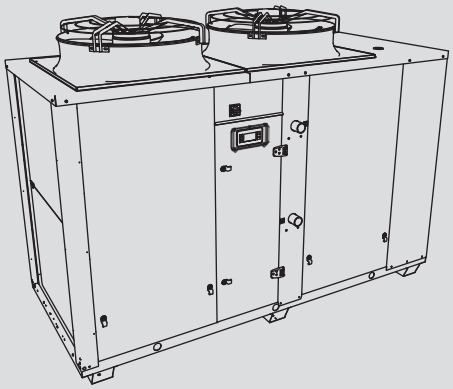

Top view

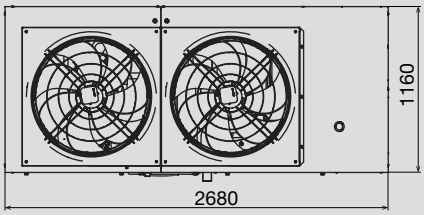

Bottom view

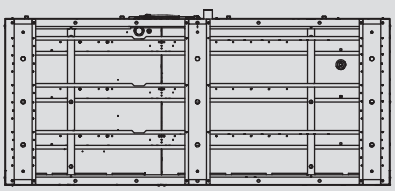

Unit: mm

ECOi-W 90 to 125 with condenser fans Standard

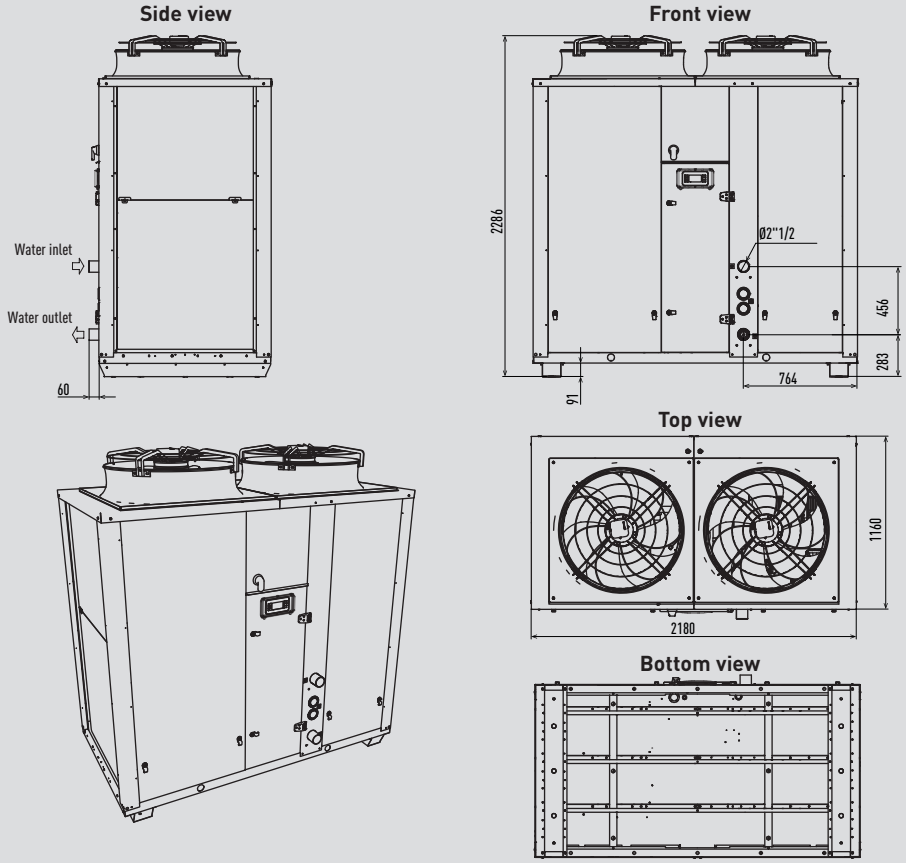

Unit: mm

ECOi-W 90 to 125 with condenser fans Standard and buffer tank

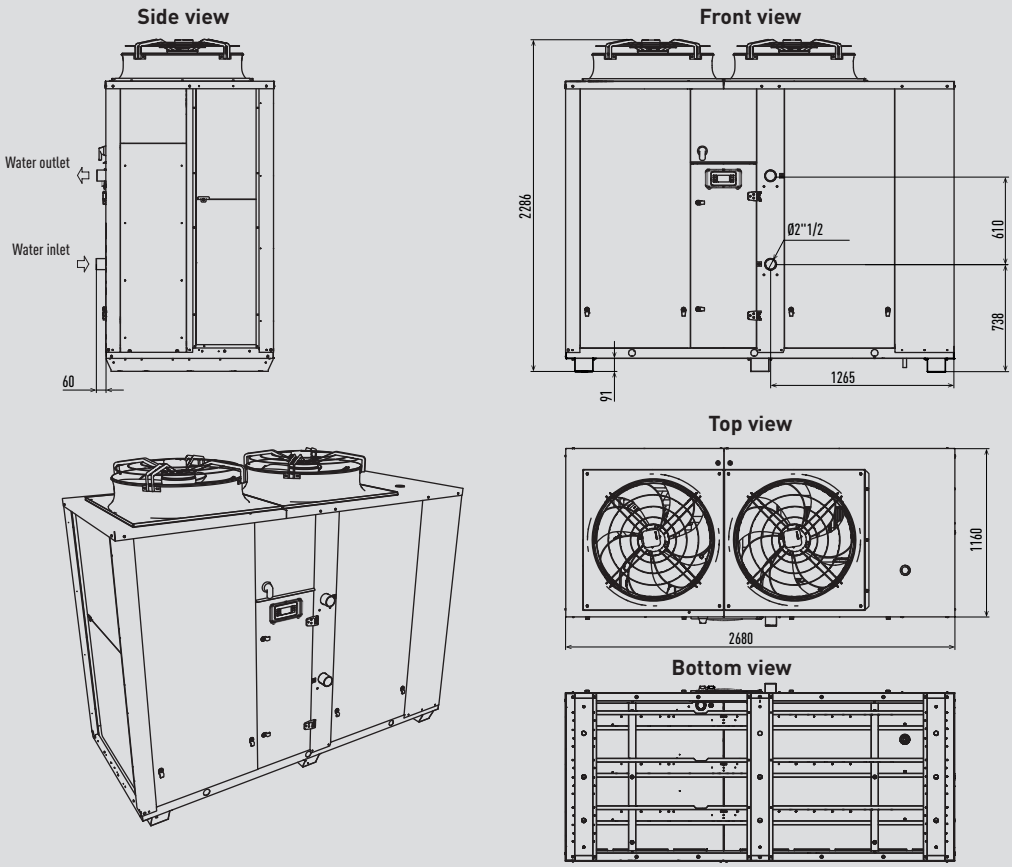

Unit: mm

ECOi-W 140 to 210 without pump

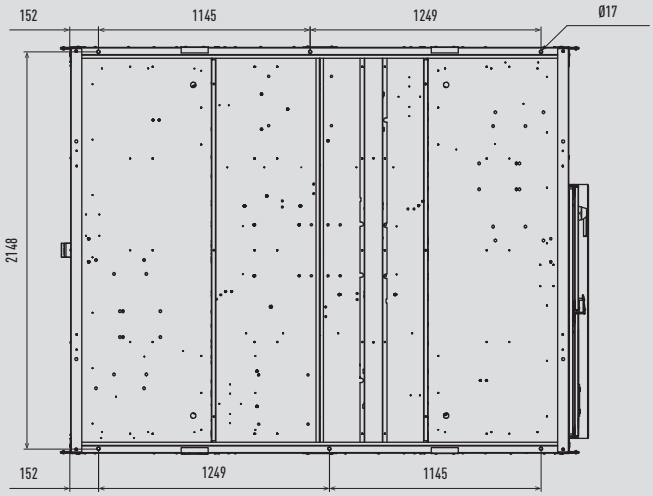

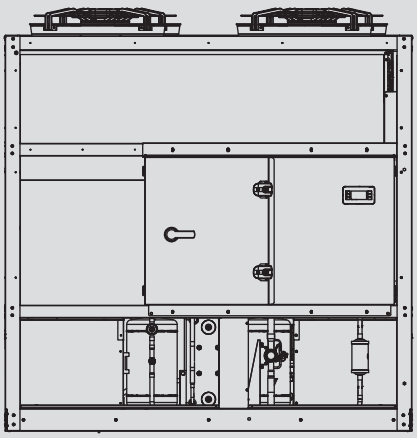

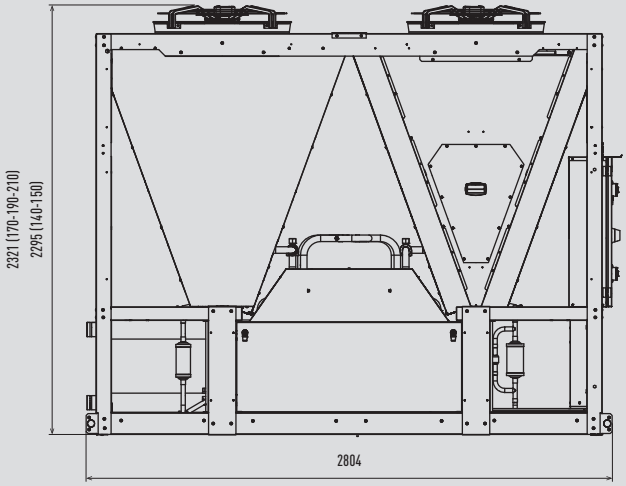

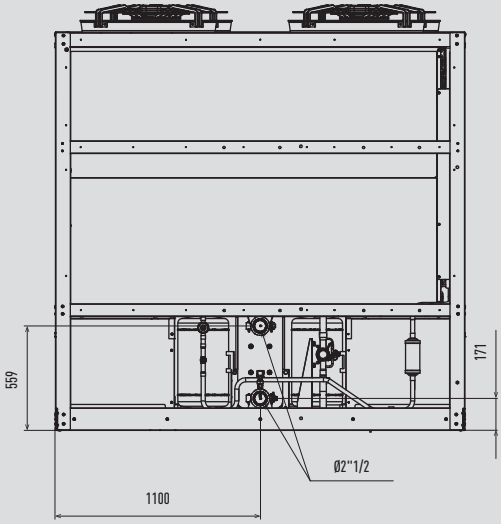

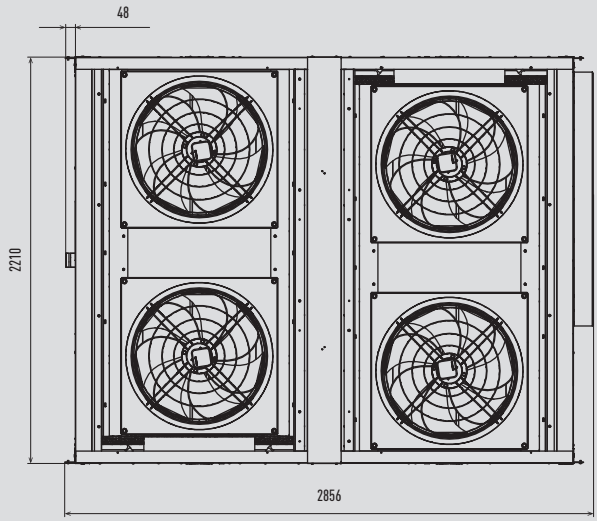

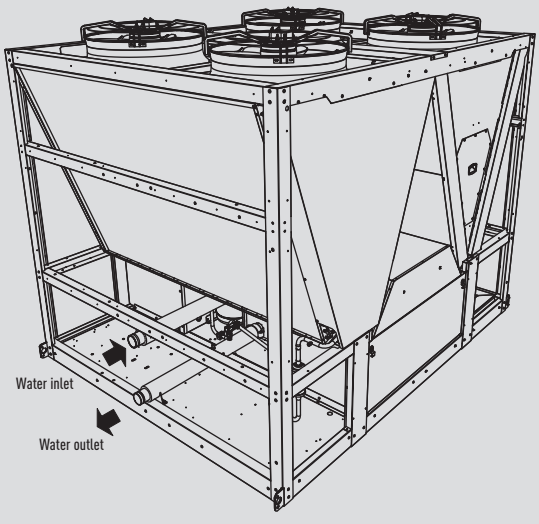

Unit: mm

ECOi-W 140 to 210 with 1 pump and buffer tank

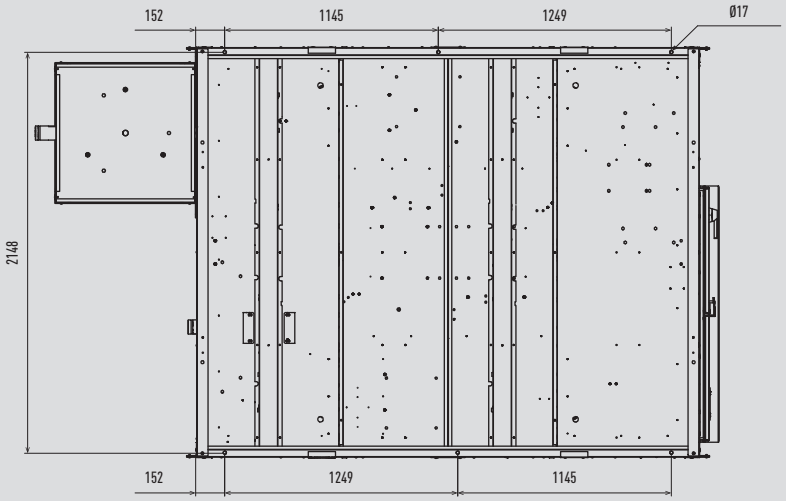

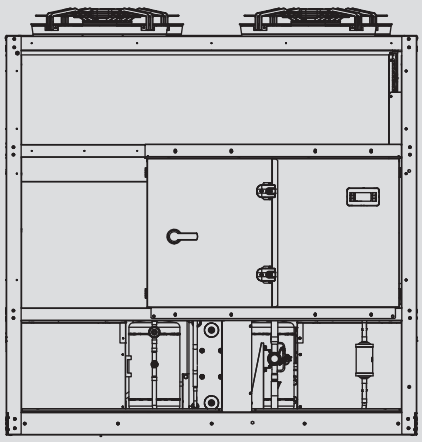

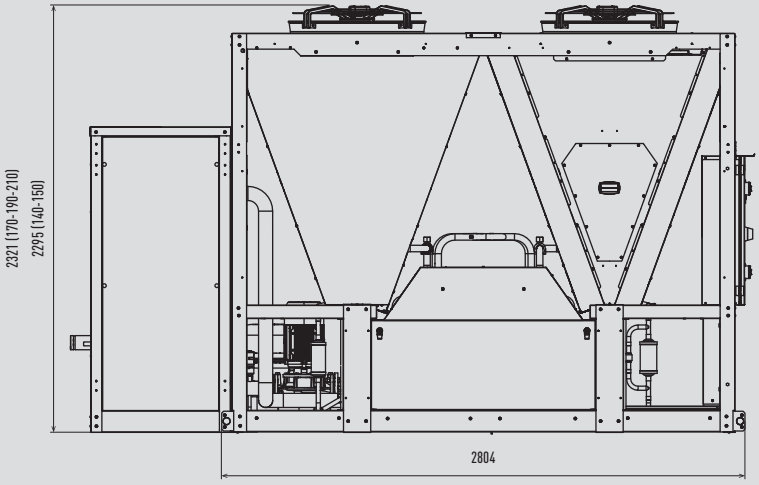

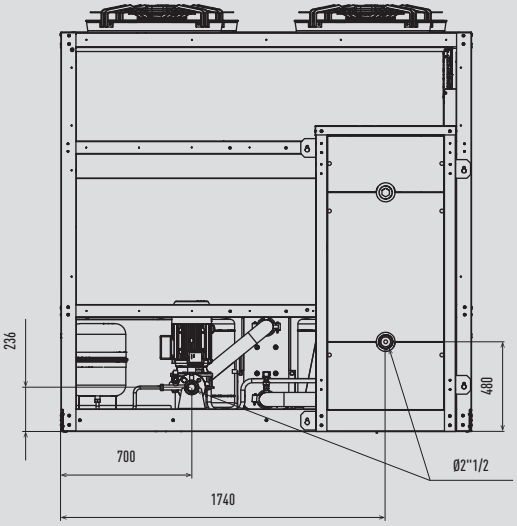

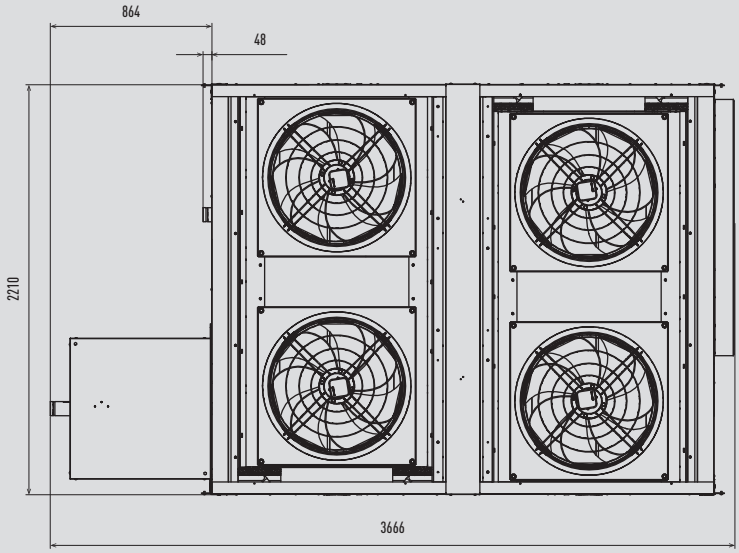

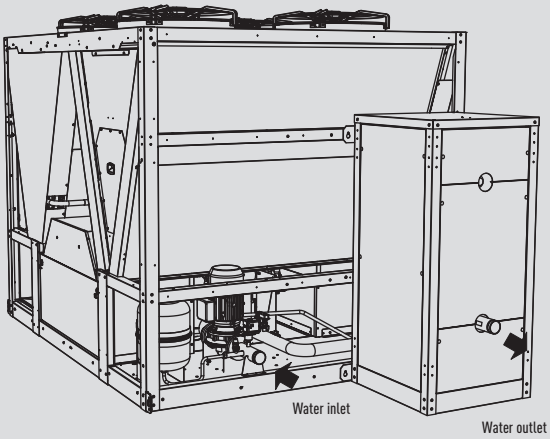

Unit: mm

Condensing units CR Series 4,0 kW

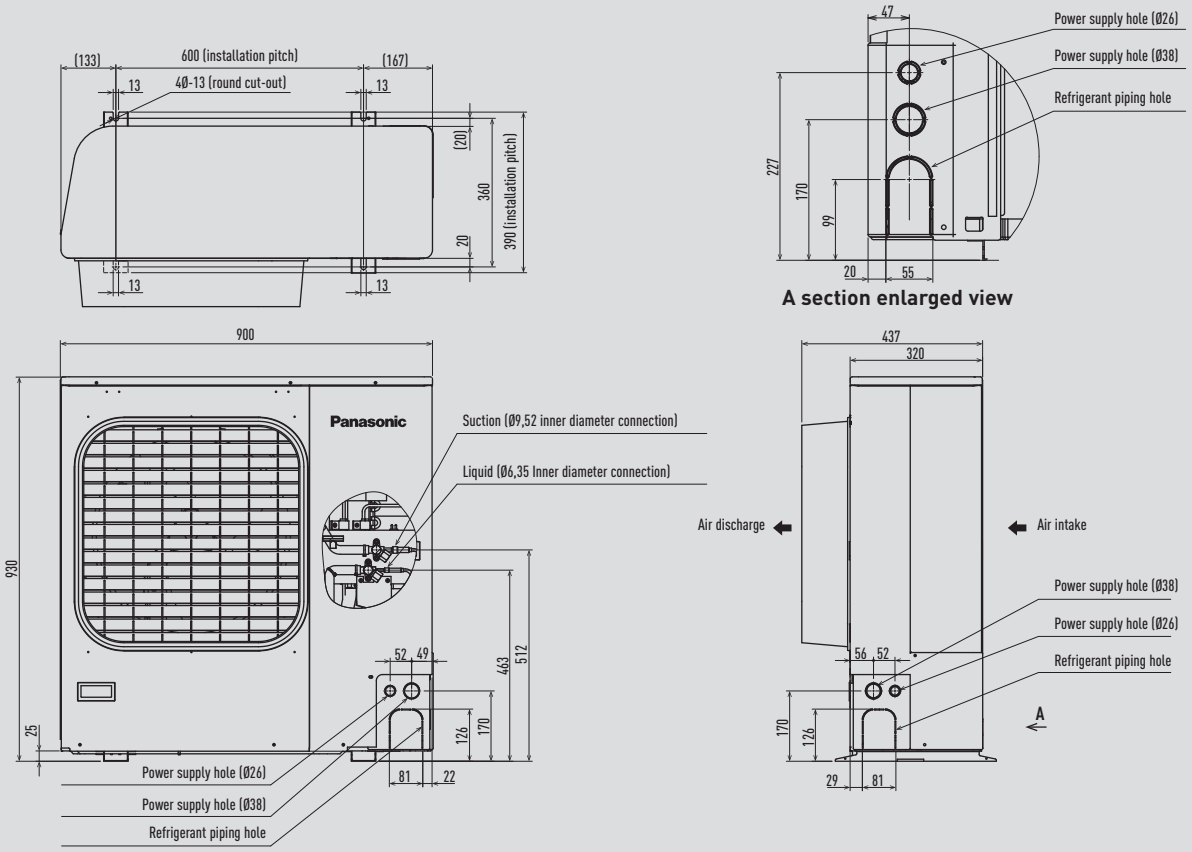

Unit: mm

Condensing units CR Series 15,0 and 14,0 kW

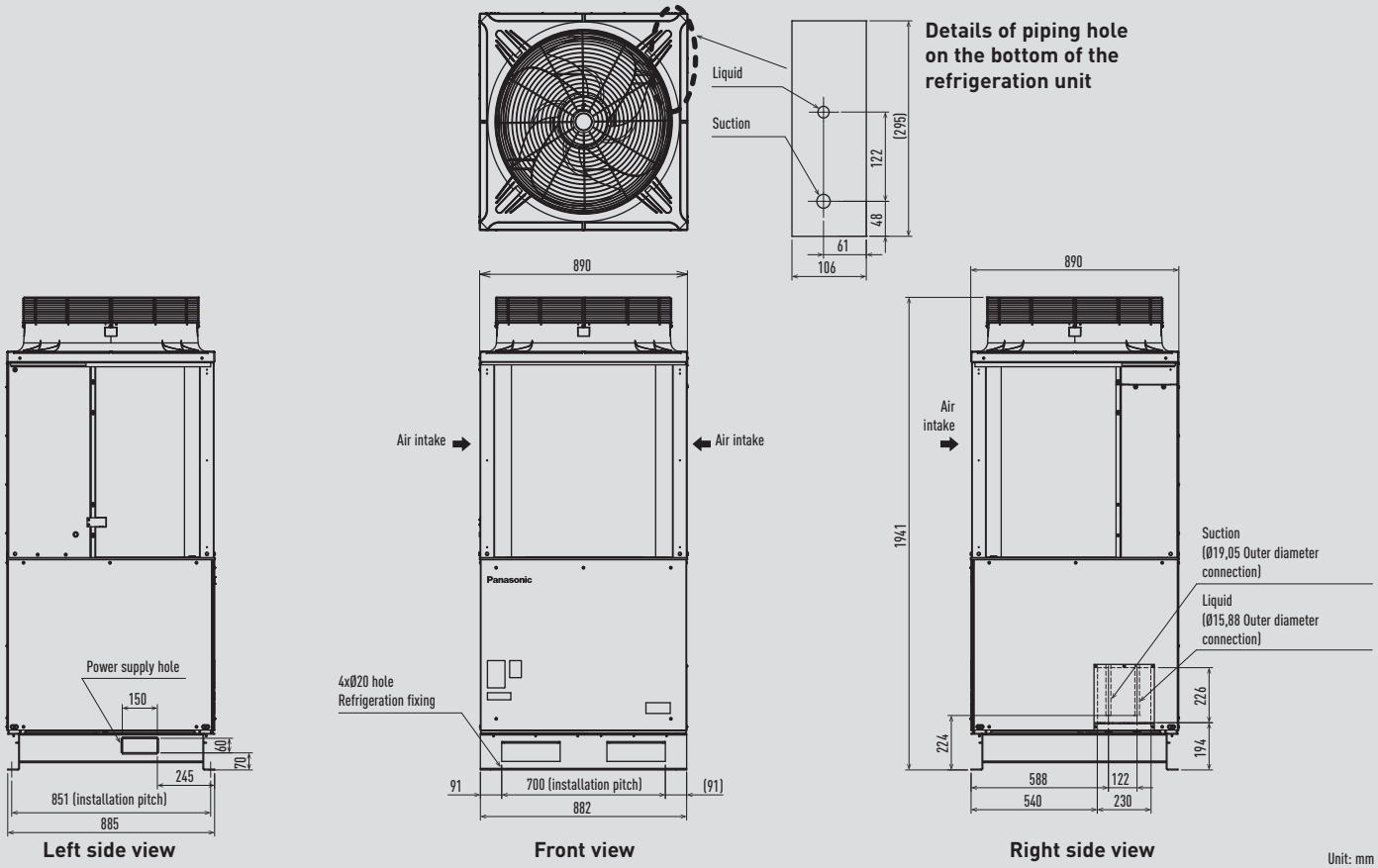

Unit: mm

Wiring diagrams

Wall-mounted kits 1x1

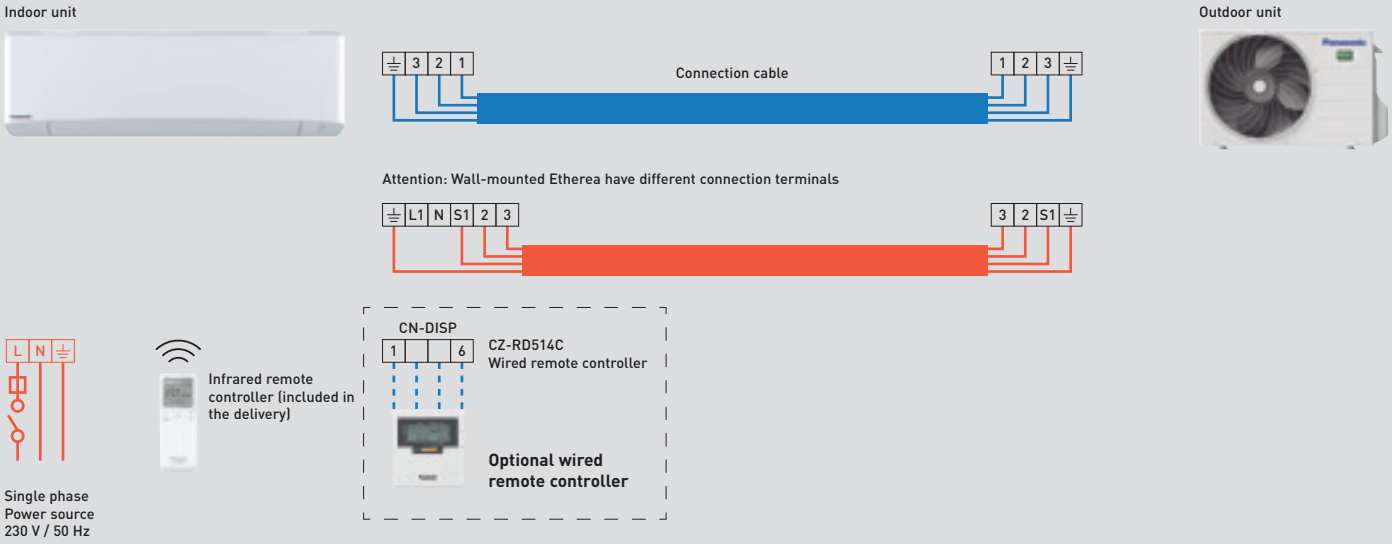

Power source to indoor or outdoor depending on model, see table.

Wall-mounted Heatcharge VZ R32

Indoor unit	Power source	Recommended fuse	Connection indoor / outdoor	Outdoor unit
CS-VZ9SKE	230 V (Outdoor)	16 A	4 x 1,5 mm²	CU-VZ9SKE
CS-VZ12SKE	230 V (Outdoor)	16 A	4 x 1,5 mm²	CU-VZ12SKE

Wall-mounted Etherea Silver / Pure White Matt R32

Indoor unit	Power source	Recommended fuse	Connection indoor / outdoor	Outdoor unit
CS-XZ20VKEW / CS-Z20VKEW	230 V (Indoor)	16 A	4 x 1,5 mm²	CU-Z20VKE
CS-XZ25VKEW / CS-Z25VKEW	230 V (Indoor)	16 A	4 x 1,5 mm²	CU-Z25VKE
CS-XZ35VKEW / CS-Z35VKEW	230 V (Indoor)	16 A	4 x 1,5 mm²	CU-Z35VKE
— / CS-Z42VKEW	230 V (Indoor)	16 A	4 x 2,5 mm²	CU-Z42VKE
CS-XZ50VKEW / CS-Z50VKEW	230 V (Indoor)	16 A	4 x 2,5 mm²	CU-Z50VKE
— / CS-Z71VKEW	230 V (Indoor)	20 A	4 x 2,5 mm²	CU-Z71VKE

Wall-mounted TZ super-compact R32

Indoor unit	Power source	Recommended fuse	Connection indoor / outdoor	Outdoor unit
CS-TZ20WKEW	230 V (Outdoor)	16 A	4 x 1,5 mm²	CU-TZ20WKE
CS-TZ25WKEW	230 V (Outdoor)	16 A	4 x 1,5 mm²	CU-TZ25WKE
CS-TZ35WKEW	230 V (Outdoor)	16 A	4 x 1,5 mm²	CU-TZ35WKE
CS-TZ42WKEW	230 V (Outdoor)	16 A	4 x 1,5 mm²	CU-TZ42WKE
CS-TZ50WKEW	230 V (Outdoor)	16 A	4 x 2,5 mm²	CU-TZ50WKE
CS-TZ60WKEW	230 V (Outdoor)	20 A	4 x 2,5 mm²	CU-TZ60WKE
CS-TZ71WKEW	230 V (Outdoor)	20 A	4 x 2,5 mm²	CU-TZ71WKE

Wall-mounted FZ super-compact R32

Indoor unit	Power source	Recommended fuse	Connection indoor / outdoor	Outdoor unit
CS-FZ25WKE	230 V (Indoor)	16 A	4 x 1,5 mm²	CU-FZ25WKE
CS-FZ35WKE	230 V (Indoor)	16 A	4 x 1,5 mm²	CU-FZ35WKE
CS-FZ50WKE	230 V (Indoor)	16 A	4 x 2,5 mm²	CU-FZ50WKE
CS-FZ60WKE	230 V (Indoor)	16 A	4 x 2,5 mm²	CU-FZ60WKE

Wall-mounted UZ super-compact R32

Indoor unit	Power source	Recommended fuse	Connection indoor / outdoor	Outdoor unit
CS-UZ25WKE	230 V (Indoor)	16 A	4 x 1,5 mm²	CU-UZ25WKE
CS-UZ35WKE	230 V (Indoor)	16 A	4 x 1,5 mm²	CU-UZ35WKE
CS-UZ50WKE	230 V (Indoor)	16 A	4 x 1,5 mm²	CU-UZ50WKE

Wall-mounted PZ super-compact R32

Indoor unit	Power source	Recommended fuse	Connection indoor / outdoor	Outdoor unit
CS-PZ25WKE	230 V (Indoor)	16 A	4 x 1,5 mm²	CU-PZ25WKE
CS-PZ35WKE	230 V (Indoor)	16 A	4 x 1,5 mm²	CU-PZ35WKE
CS-PZ50WKE	230 V (Indoor)	16 A	4 x 1,5 mm²	CU-PZ50WKE

Wall-mounted Professional kits 1x1

Indoor unit

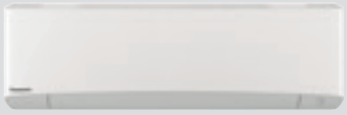

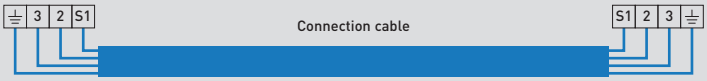

Outdoor unit

Single phase
Power source
230 V / 50 Hz

CN-RMT

CZ-RD514C
Included wired remote controller

Wall-mounted Professional -20 °C R32

Indoor unit	Power source	Recommended fuse	Connection indoor / outdoor	Outdoor unit
CS-Z25TKEA	230 V (Indoor)	16 A	4 x 1,5 mm²	CU-Z25TKEA
CS-Z35TKEA	230 V (Indoor)	16 A	4 x 1,5 mm²	CU-Z35TKEA
CS-Z42TKEA	230 V (Indoor)	16 A	4 x 1,5 mm²	CU-Z42TKEA
CS-Z50TKEA	230 V (Indoor)	16 A	4 x 2,5 mm²	CU-Z50TKEA
CS-Z71TKEA	230 V (Indoor)	20 A	4 x 2,5 mm²	CU-Z71TKEA

Wall-mounted Professional -20 °C R410A

Indoor unit	Power source	Recommended fuse	Connection indoor / outdoor	Outdoor unit
CS-E9PKEA	230 V (Indoor)	16 A	4 x 1,5 mm²	CU-E9PKEA
CS-E12PKEA	230 V (Indoor)	16 A	4 x 1,5 mm²	CU-E12PKEA
CS-E15PKEA	230 V (Indoor)	16 A	4 x 1,5 mm²	CU-E15PKEA
CS-E18PKEA	230 V (Indoor)	16 A	4 x 2,5 mm²	CU-E18PKEA

Floor Console kits 1x1

Indoor unit

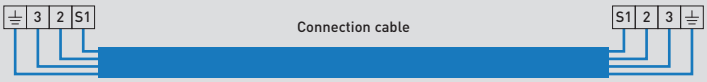

Outdoor unit

Infrared remote controller (included in the delivery)

Single phase
Power source
230 V / 50 Hz

Floor Console R32

Indoor unit	Power source	Recommended fuse	Connection indoor / outdoor	Outdoor unit
CS-Z25UFEAW	230 V (Outdoor)	16 A	3 x 1,5 mm²	CU-Z25UBEA
CS-Z35UFEAW	230 V (Outdoor)	16 A	3 x 1,5 mm²	CU-Z35UBEA
CS-Z50UFEAW	230 V (Outdoor)	16 A	3 x 2,5 mm²	CU-Z50UBEA

4 Way 60x60 Cassette kits 1x1

Indoor unit

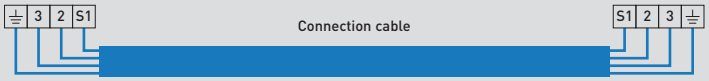

Outdoor unit

Infrared remote controller (included in the delivery)

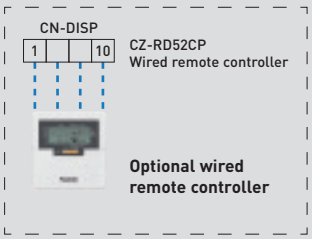

Single phase
Power source
230 V / 50 Hz

4 Way 60x60 Cassette R32

Indoor unit	Power source	Recommended fuse	Connection indoor / outdoor	Outdoor unit
CS-Z25UB4EAW	230 V (Outdoor)	16 A	4 x 1,5 ~ 2,5 mm²	CU-Z25UBEA
CS-Z35UB4EAW	230 V (Outdoor)	16 A	4 x 1,5 ~ 2,5 mm²	CU-Z35UBEA
CS-Z50UB4EAW	230 V (Outdoor)	16 A	4 x 1,5 ~ 2,5 mm²	CU-Z50UBEA
CS-Z60UB4EAW	230 V (Outdoor)	16 A	4 x 1,5 ~ 2,5 mm²	CU-Z60UBEA

Low Static Pressure Hide Away kits 1x1

Indoor unit

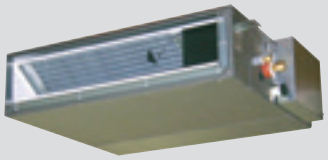

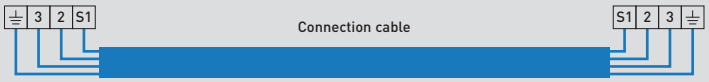

Outdoor unit

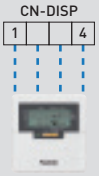

Single phase
Power source
230 V / 50 Hz

Low Static Pressure Hide Away R32

Indoor unit	Power source	Recommended fuse	Connection indoor / outdoor	Outdoor unit
CS-Z25UD3EAW	230 V (Outdoor)	16 A	4 x 1,5 ~ 2,5 mm²	CU-Z25UBEA
CS-Z35UD3EAW	230 V (Outdoor)	16 A	4 x 1,5 ~ 2,5 mm²	CU-Z35UBEA
CS-Z50UD3EAW	230 V (Outdoor)	16 A	4 x 1,5 ~ 2,5 mm²	CU-Z50UBEA
CS-Z60UD3EAW	230 V (Outdoor)	16 A	4 x 1,5 ~ 2,5 mm²	CU-Z60UBEA

Free Multi System 2 Rooms

Indoor unit

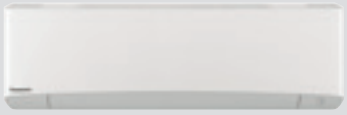

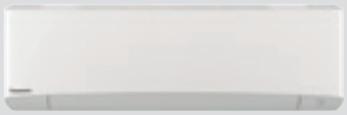

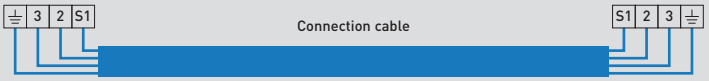

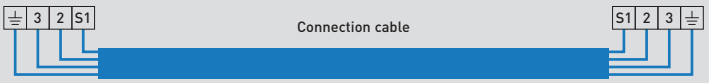

Attention: Wall-mounted Etherea have different connection terminals (Multi Split)

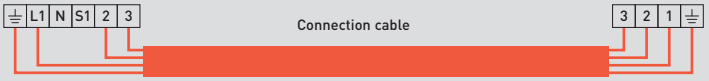

Outdoor unit

Single phase
Power source
230 V / 50 Hz / 10 A

Free Multi System R32

Outdoor unit	Power source	Recommended fuse	Connection indoor / outdoor
CU-2Z35TBE	230 V	16 A	2,5 mm²
CU-2Z41TBE	230 V	16 A	2,5 mm²
CU-2Z50TBE	230 V	16 A	2,5 mm²
CU-2TZ41TBE	230 V	16 A	2,5 mm²
CU-2TZ50TBE	230 V	16 A	2,5 mm²

Free Multi System 3 Rooms

Indoor unit

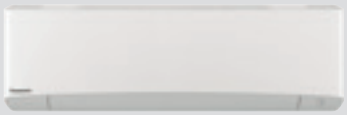

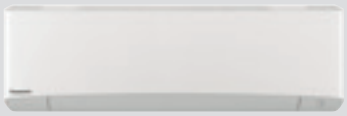

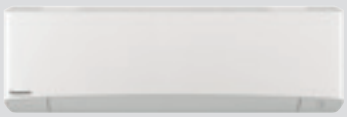

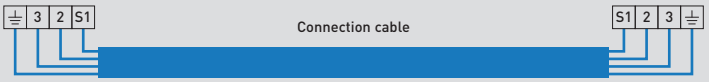

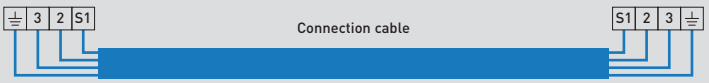

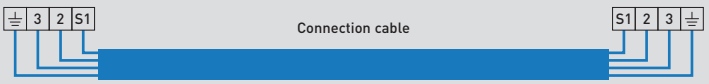

Attention: Wall-mounted Etherea have different connection terminals (Multi Split)

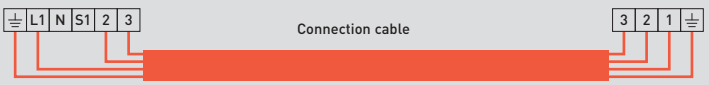

Outdoor unit

Single phase
Power source
230 V / 50 Hz / 10 A

Free Multi System R32

Outdoor unit	Power source	Recommended fuse	Connection indoor / outdoor
CU-3Z52TBE	230 V	16 A	2,5 mm²
CU-3Z68TBE	230 V	16 A	2,5 mm²
CU-3TZ52TBE	230 V	16 A	2,5 mm²

Free Multi System 4 Rooms

Indoor unit

Outdoor unit

Single phase
Power source
230 V / 50 Hz / 10 A

Attention: Wall-mounted Etherea have different connection terminals (Multi Split)

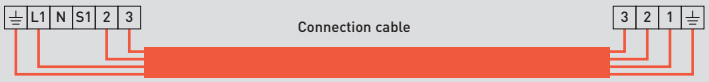

Free Multi System R32

Outdoor unit	Power source	Recommended fuse	Power supply cable
CU-4Z68TBE	230 V	20 A	3 x 2,5 mm²
CU-4Z80TBE	230 V	20 A	3 x 2,5 mm²

Free Multi System 5 Rooms

Indoor unit

Outdoor unit

Single phase
Power source
230 V / 50 Hz / 10 A

Attention: Wall-mounted Etherea have different connection terminals (Multi Split)

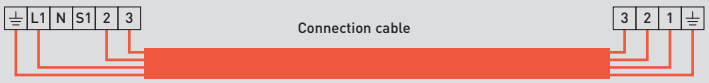

Free Multi System R32

Outdoor unit	Power source	Recommended fuse	Power supply cable
CU-5Z90TBE	230 V	25 A	3 x 4,0 mm²

PACi Wall-mounted kits 1x1

Indoor unit

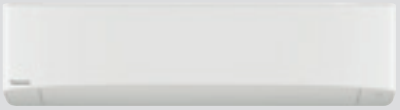

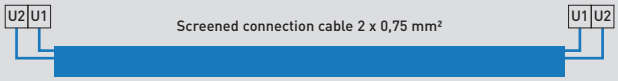

Outdoor unit

Single phase
Power source
230 V / 50 Hz / 3 A

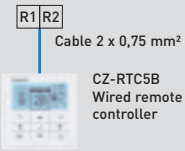

Single phase
Power source
230 V / 50 Hz / *

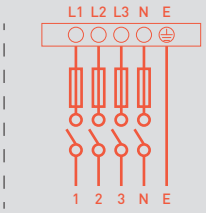

Three phase
Power source
3 x 400 V / 1 N ~ 50 Hz / **

Single Phase

		R32			R410A		
Indoor unit	**Power source**	**Outdoor unit**	**Power source**	**Circuit breaker***	**Outdoor unit**	**Power source**	**Circuit breaker***
S-36PK2E5B	220/230/240V	U-36PZH2E5	220/230/240V	16A	U-36PE2E5A	220/230/240V	16A
S-50PK2E5B		U-50PZH2E5		16A	U-50PE2E5A		16A
S-60PK2E5B		U-60PZH2E5		20A	U-60PE2E5A		20A
S-71PK2E5B		U-71PZH2E5		20A	U-71PE1E5A		20A
S-100PK2E5B		U-100PZH2E5		30A	U-100PE1E5A		30A
S-60PK2E5B		U-60PZ2E5		20A	U-60PEY2E5		20A
S-71PK2E5B		U-71PZ2E5		20A	U-71PEY2E5		20A
S-100PK2E5B		U-100PZ2E5		30A	U-100PEY1E5		30A

Three Phase

		R32			R410A		
Indoor unit	**Power source**	**Outdoor unit**	**Power source**	**Circuit breaker****	**Outdoor unit**	**Power source**	**Circuit breaker****
S-71PK2E5B	220/230/240V	U-71PZH2E8	380/400/415V	10A	U-71PE1E8A	380/400/415V	10A
S-100PK2E5B		U-100PZH2E8		10A	U-100PE1E8A		10A
S-100PK2E5B		U-100PZ2E8		10A	U-100PEY1E8		10A

PACi 4 Way 60x60 Cassette kits 1x1

Indoor unit

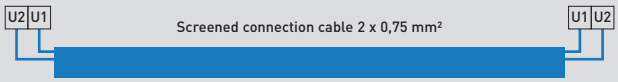

Outdoor unit

Single phase
Power source
230 V / 50 Hz / 3 A

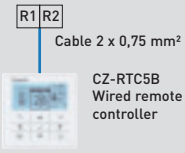

Single phase
Power source
230 V / 50 Hz / 16 A

Single phase

		R32			R410A		
Indoor unit	**Power source**	**Outdoor unit**	**Power source**	**Circuit breaker**	**Outdoor unit**	**Power source**	**Circuit breaker**
S-36PY2E5B	220/230/240 V	U-36PZH2E5	220/230/240 V	16 A	U-36PE2E5A	220/230/240 V	16 A
S-50PY2E5B		U-50PZH2E5		16 A	U-50PE2E5A		16 A

BIG PACi High Static Pressure Hide Away 20,0-25,0 kW kits 1x1

Indoor unit

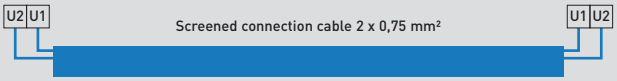

Outdoor unit

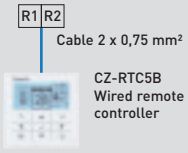

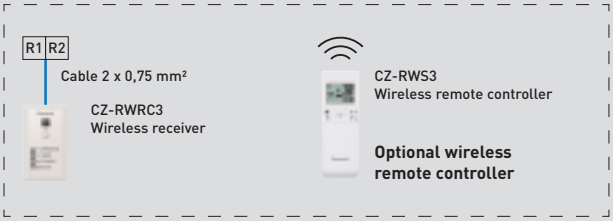

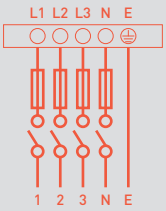

Single phase
Power source
230 V / 50 Hz / 10 A

Three phase
Power source
3 x 400 V / 1 N ~ 50 Hz / *

Three phase

		R32			R410A		
Indoor unit	**Power source**	**Outdoor unit**	**Power source**	**Circuit breaker***	**Outdoor unit**	**Power source**	**Circuit breaker***
S-200PE3E5B	220/230/240 V	U-200PZH2E8	380/400/415 V	16 A	U-200PE2E8A	380/400/415 V	25 A
S-250PE3E5B		U-250PZH2E8		20 A	U-250PE2E8A		25 A

PACi 4 Way 90x90 Cassette kits 1x1

Indoor unit

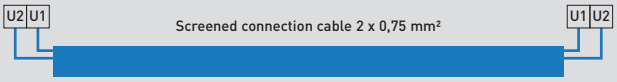

Outdoor unit

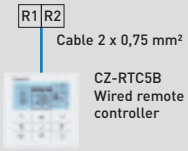

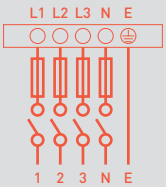

Single phase
Power source
230 V / 50 Hz / 3 A

Single phase
Power source
230 V / 50 Hz / *

Three phase
Power source
3 x 400 V / 1 N ~ 50 Hz / **

			R32			R410A		
	Indoor unit	**Power source**	**Outdoor unit**	**Power source**	**Circuit breaker***	**Outdoor unit**	**Power source**	**Circuit breaker***
Single Phase	S-36PU2E5B	220/230/240V	U-36PZH2E5	220/230/240V	16A	U-36PE2E5A	220/230/240V	16A
	S-50PU2E5B		U-50PZH2E5		16A	U-50PE2E5A		16A
	S-60PU2E5B		U-60PZH2E5		20A	U-60PE2E5A		20A
	S-71PU2E5B		U-71PZH2E5		20A	U-71PE1E5A		20A
	S-100PU2E5B		U-100PZH2E5		25A	U-100PE1E5A		30A
	S-125PU2E5B		U-125PZH2E5		30A	U-125PE1E5A		30A
	S-140PU2E5B		U-140PZH2E5		30A	U-140PE1E5A		40A
	S-60PU2E5B		U-60PZ2E5		20A	U-60PEY2E5		20A
	S-71PU2E5B		U-71PZ2E5		20A	U-71PEY2E5		20A
	S-100PU2E5B		U-100PZ2E5		30A	U-100PEY1E5		30A
	S-125PU2E5B		U-125PZ2E5		30A	U-125PEY1E5		30A
	S-140PU2E5B		U-140PZ2E5		40A			
Three Phase	**Indoor unit**	**Power source**	**Outdoor unit**	**Power source**	**Circuit breaker****	**Outdoor unit**	**Power source**	**Circuit breaker****
	S-71PU2E5B	220/230/240V	U-71PZH2E8	380/400/415V	10A	U-71PE1E8A	380/400/415V	10A
	S-100PU2E5B		U-100PZH2E8		10A	U-100PE1E8A		10A
	S-125PU2E5B		U-125PZH2E8		16A	U-125PE1E8A		16A
	S-140PU2E5B		U-140PZH2E8		16A	U-140PE1E8A		16A
	S-100PU2E5B		U-100PZ2E8		10A	U-100PEY1E8		10A
	S-125PU2E5B		U-125PZ2E8		16A	U-125PEY1E8		16A
	S-140PU2E5B		U-140PZ2E8		16A	U-140PEY1E8		16A

PACi Ceiling kits 1x1

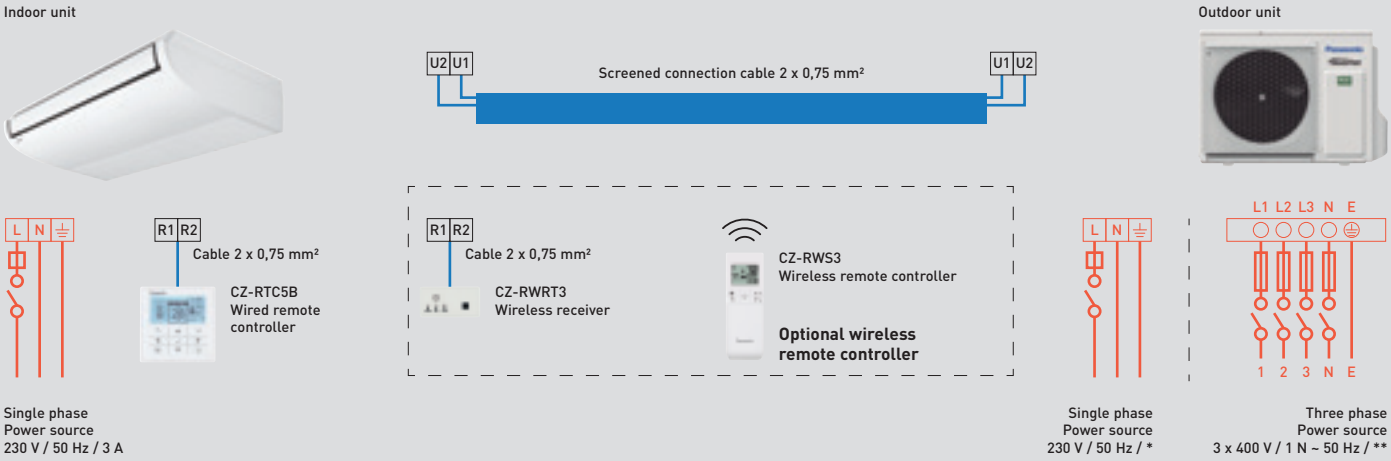

Single phase

		R32			R410A		
Indoor unit	Power source	Outdoor unit	Power source	Circuit breaker*	Outdoor unit	Power source	Circuit breaker*
S-36PT2E5B	220/230/240 V	U-36PZH2E5	220/230/240 V	16 A	U-36PE2E5A	220/230/240 V	16 A
S-50PT2E5B		U-50PZH2E5		16 A	U-50PE2E5A		16 A
S-60PT2E5B		U-60PZH2E5		20 A	U-60PE2E5A		20 A
S-71PT2E5B		U-71PZH2E5		20 A	U-71PE1E5A		20 A
S-100PT2E5B		U-100PZH2E5		30 A	U-100PE1E5A		30 A
S-125PT2E5B		U-125PZH2E5		30 A	U-125PE1E5A		30 A
S-140PT2E5B		U-140PZH2E5		30 A	U-140PE1E5A		40A
S-60PT2E5B		U-60PZ2E5		20 A	U-60PEY2E5		20 A
S-71PT2E5B		U-71PZ2E5		20 A	U-71PEY2E5		20 A
S-100PT2E5B		U-100PZ2E5		30 A	U-100PEY1E5		30 A
S-125PT2E5B		U-125PZ2E5		30 A	U-125PEY1E5		30 A
S-140PT2E5B		U-140PZ2E5		40A			

Three phase

		R32	R410A		
Indoor unit	Power source	Outdoor unit	Outdoor unit	Power source	Circuit breaker**
S-71PT2E5B	220/230/240 V	U-71PZH2E8	U-71PE1E8A	380/400/415 V	10 A
S-100PT2E5B		U-100PZH2E8	U-100PE1E8A		10 A
S-125PT2E5B		U-125PZH2E8	U-125PE1E8A		16 A
S-140PT2E5B		U-140PZH2E8	U-140PE1E8A		16 A
S-100PT2E5B		U-100PZ2E8	U-100PEY1E8		10 A
S-125PT2E5B		U-125PZ2E8	U-125PEY1E8		16 A
S-140PT2E5B		U-140PZ2E8	U-140PEY1E8		16 A

PACi Hide Away kits 1x1

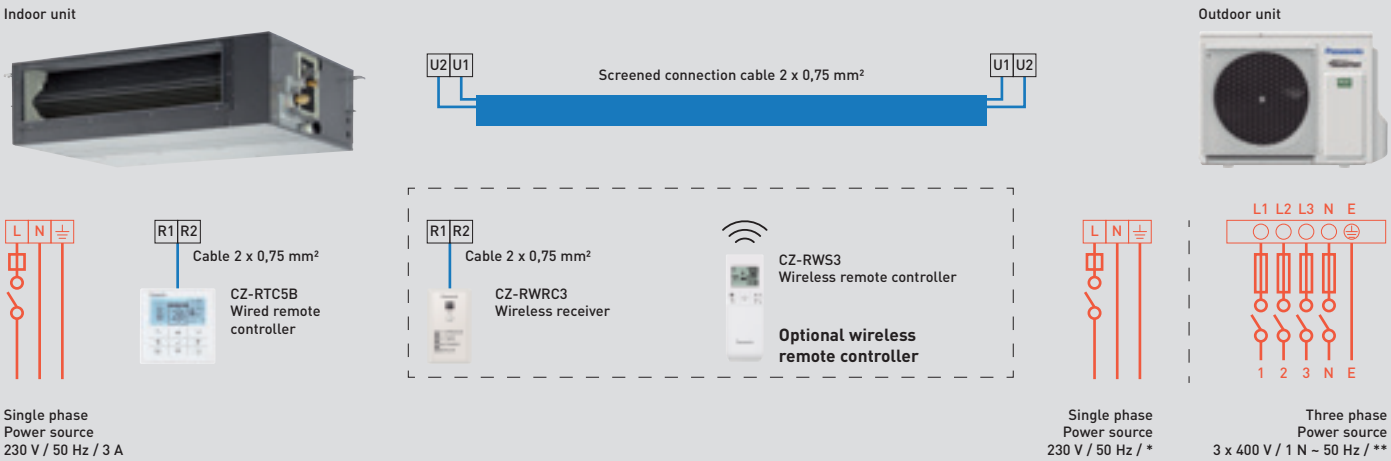

				R32			R410A		
	High Static indoor unit	Low Static indoor unit	Power source	Outdoor unit	Power source	Circuit breaker*	Outdoor unit	Power source	Circuit breaker*
Single phase	S-36PF1E5B	S-36PN1E5B	220/230/240 V	U-36PZH2E5	220/230/240 V	16 A	U-36PE2E5A	220/230/240 V	16 A
	S-50PF1E5B	S-50PN1E5B		U-50PZH2E5		16 A	U-50PE2E5A		16 A
	S-60PF1E5B	S-60PN1E5B		U-60PZH2E5		20 A	U-60PE2E5A		20 A
	S-71PF1E5B	S-71PN1E5B		U-71PZH2E5		20 A	U-71PE1E5A		20 A
	S-100PF1E5B	S-100PN1E5B		U-100PZH2E5		30 A	U-100PE1E5A		30 A
	S-125PF1E5B	S-125PN1E5B		U-125PZH2E5		30 A	U-125PE1E5A		30 A
	S-140PF1E5B	S-140PN1E5B		U-140PZH2E5		30 A	U-140PE1E5A		40A
	S-60PF1E5B	S-60PN1E5B		U-60PZ2E5		20 A	U-60PEY2E5		20 A
	S-71PF1E5B	S-71PN1E5B		U-71PZ2E5		20 A	U-71PEY2E5		20 A
	S-100PF1E5B	S-100PN1E5B		U-100PZ2E5		30 A	U-100PEY1E5		30 A
	S-125PF1E5B	S-125PN1E5B		U-125PZ2E5		30 A	U-125PEY1E5		30 A
	S-140PF1E5B	S-140PN1E5B		U-140PZ2E5		40A			
	High Static indoor unit	Low Static indoor unit	Power source	Outdoor unit	Power source	Circuit breaker**	Outdoor unit	Power source	Circuit breaker**
Three Phase	S-71PF1E5B	S-71PN1E5B	220/230/240V	U-71PZH2E8	380/400/415V	10A	U-71PE1E8A	380/400/415V	10A
	S-100PF1E5B	S-100PN1E5B		U-100PZH2E8		10A	U-100PE1E8A		10A
	S-125PF1E5B	S-125PN1E5B		U-125PZH2E8		16A	U-125PE1E8A		16A
	S-140PF1E5B	S-140PN1E5B		U-140PZH2E8		16A	U-140PE1E8A		16A
	S-100PF1E5B	S-100PN1E5B		U-100PZ2E8		10A	U-100PEY1E8		10A
	S-125PF1E5B	S-125PN1E5B		U-125PZ2E8		16A	U-125PEY1E8		16A
	S-140PF1E5B	S-140PN1E5B		U-140PZ2E8		16A	U-140PEY1E8		16A

PACi Twin System

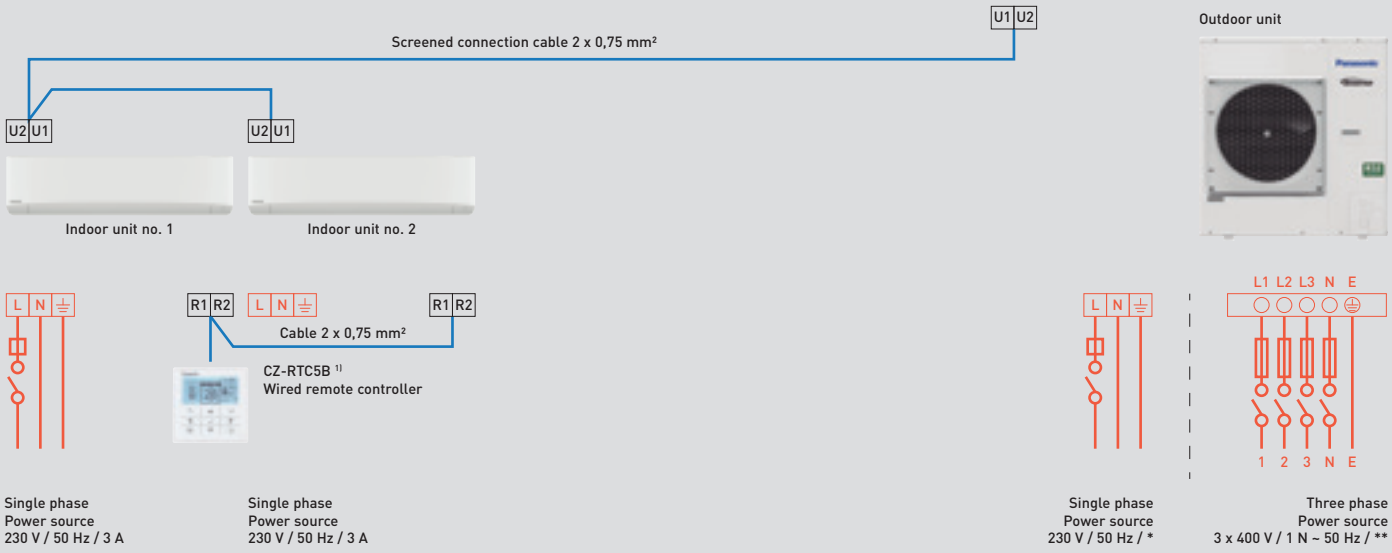

Single phase

R32			R410A		
Outdoor unit	**Power source**	**Circuit breaker***	**Outdoor unit**	**Power source**	**Circuit breaker***
U-71PZH2E5	220/230/240 V	20 A	U-71PE1E5A	220/230/240 V	20 A
U-100PZH2E5		30 A	U-100PE1E5A		30 A
U-125PZH2E5		30 A	U-125PE1E5A		30 A
U-140PZH2E5		30 A	U-140PE1E5A		40A
U-71PZ2E5		20 A	U-100PEY1E5		30 A
U-100PZ2E5		30 A	U-125PEY1E5		30 A
U-125PZ2E5		30 A			
U-140PZ2E5		30 A			

1) Optional wireless remote controller is also possible. Wireless receivers may be required depending on indoor units.

Three phase

R32			R410A		
Outdoor unit	**Power source**	**Circuit breaker****	**Outdoor unit**	**Power source**	**Circuit breaker****
U-71PZH2E8	380/400/415 V	10 A	U-71PE1E8A	380/400/415 V	10 A
U-100PZH2E8		10 A	U-100PE1E8A		10 A
U-125PZH2E8		16 A	U-125PE1E8A		16 A
U-140PZH2E8		16 A	U-140PE1E8A		16 A
U-200PZH2E8		16 A	U-200PE2E8A		16 A
U-250PZH2E8		25 A	U-250PE2E8A		25 A
U-100PZ2E8		10 A	U-100PEY1E8		10 A
U-125PZ2E8		16 A	U-125PEY1E8		16 A
U-140PZ2E8		16 A	U-140PEY1E8		16 A

PACi Triple System

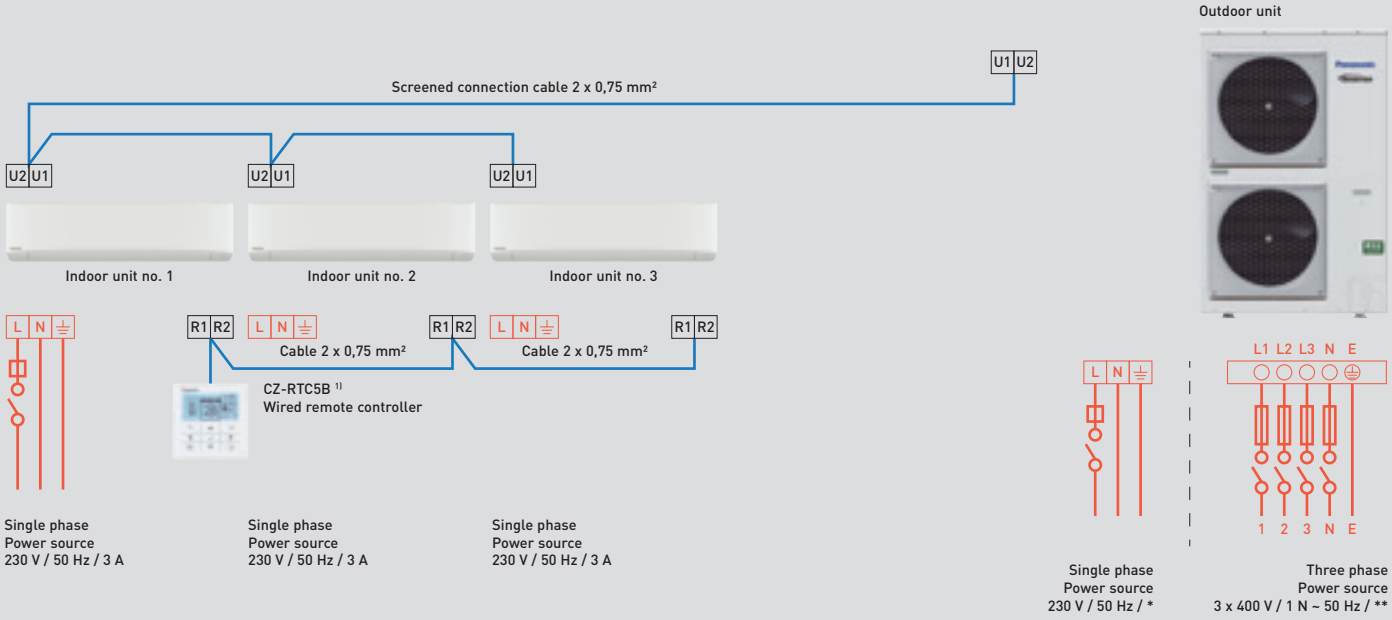

Single phase

R32			R410A		
Outdoor unit	**Power source**	**Circuit breaker***	**Outdoor unit**	**Power source**	**Circuit breaker***
U-100PZH2E5	220 / 230 / 240 V	30 A	U-100PE1E5A	220 / 230 / 240 V	30 A
U-125PZH2E5		30 A	U-125PE1E5A		30 A
U-140PZH2E5		30 A	U-140PE1E5A		40A

1) Optional wireless remote controller is also possible. Wireless receivers may be required depending on indoor units.

Three phase

R32			R410A		
Outdoor unit	**Power source**	**Circuit breaker****	**Outdoor unit**	**Power source**	**Circuit breaker****
U-100PZH2E8	380 / 400 / 415 V	10 A	U-100PE1E8A	380 / 400 / 415 V	10 A
U-125PZH2E8		16 A	U-125PE1E8A		16 A
U-140PZH2E8		16 A	U-140PE1E8A		16 A
U-200PZH2E8		16 A	U-200PE2E8A		16 A

PACi Double-Twin System

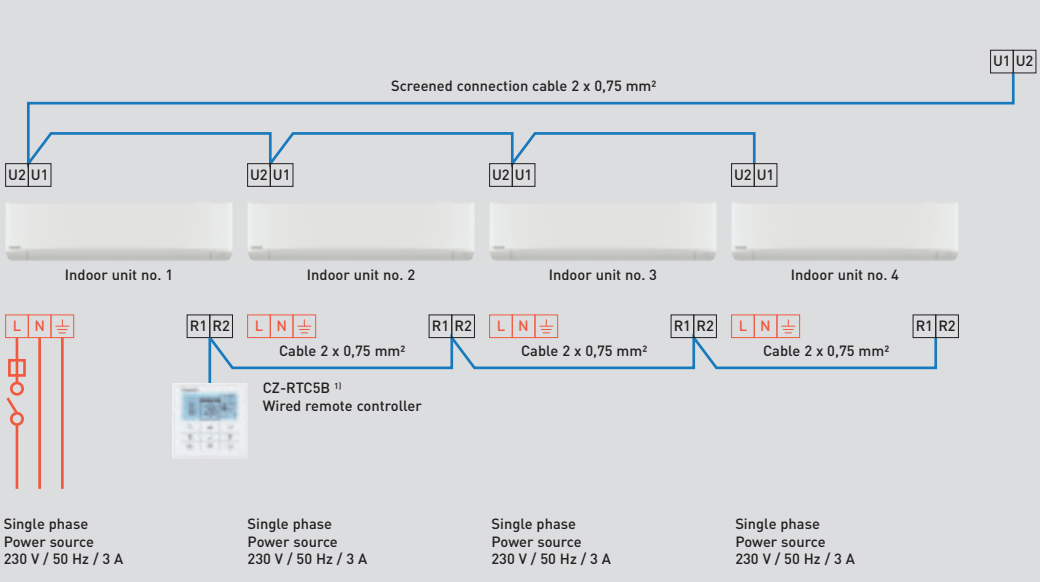

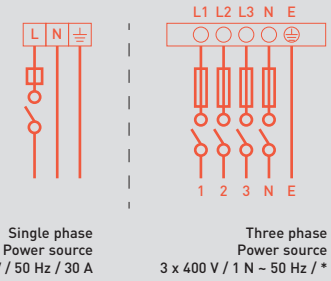

Single phase

R32			R410A		
Outdoor unit	**Power source**	**Circuit breaker**	**Outdoor unit**	**Power source**	**Circuit breaker**
U-125PZH2E5	220 / 230 / 240 V	30 A	U-125PE1E5A	220 / 230 / 240 V	30 A

Three phase

R32			R410A		
Outdoor unit	**Power source**	**Circuit breaker***	**Outdoor unit**	**Power source**	**Circuit breaker***
U-125PZH2E8	380 / 400 / 415 V	16 A	U-125PE1E8A	380 / 400 / 415 V	16 A
U-200PZH2E8		16 A	U-200PE2E8A		16 A
U-250PZH2E8		25 A	U-250PE2E8A		25 A

1) Optional wireless remote controller is also possible. Wireless receivers may be required depending on indoor units.

Mini ECOi Series

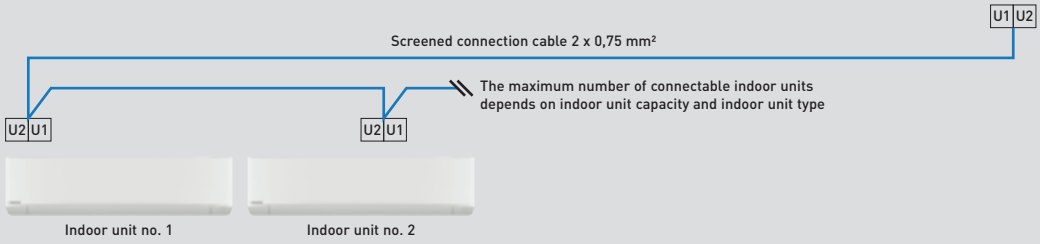

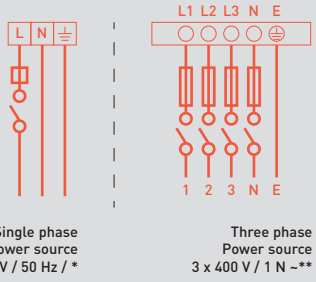

Single phase

Outdoor unit	Power source	Circuit breaker*
U-4LE2E5	220/230/240 V	20 A
U-5LE2E5		25 A
U-6LE2E5		30 A

Three phase

Outdoor unit	Power source	Circuit breaker**
U-4LE2E8	380/400/415 V	10 A
U-5LE2E8		16 A
U-6LE2E8		16 A
U-8LE1E8		16 A
U-10LE1E8		20 A

1) Wireless remote controller is also possible. Wireless receivers may be required depending on indoor units.
2) 10 A for single indoor connection to S-224ME2E5 / S-280ME2E5, in combination with U-8LE1E8 / U-10LE1E8.

ECOi EX and ECO G Series

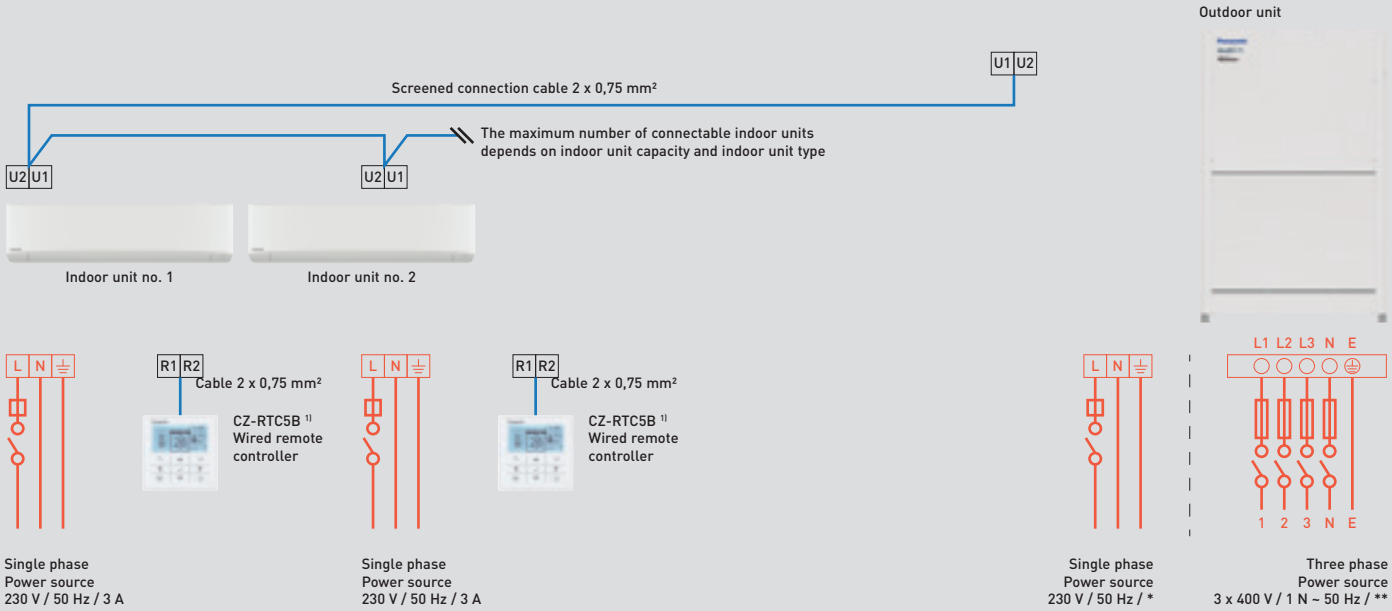

Single phase
Power source
230 V / 50 Hz / 3 A

Single phase
Power source
230 V / 50 Hz / 3 A

Single phase
Power source
230 V / 50 Hz / *

Three phase
Power source
3 x 400 V / 1 N ~ 50 Hz / **

ECOi EX Series

2-Pipe			3-Pipe		
Outdoor unit	**Power source**	**Circuit breaker****	**Outdoor unit**	**Power source**	**Circuit breaker****
U-8ME2E8	380 / 400 / 415 V	16 A	U-8MF3E8	380 / 400 / 415 V	16 A
U-10ME2E8		16 A	U-10MF3E8		20 A
U-12ME2E8		20 A	U-12MF3E8		25 A
U-14ME2E8		25 A	U-14MF3E8		40A
U-16ME2E8		30 A	U-16MF3E8		30 A
U-18ME2E8		40A			
U-20ME2E8		40A			

ECO G Series

2-Pipe			3-Pipe		
Outdoor unit	**Power source**	**Circuit breaker***	**Outdoor unit**	**Power source**	**Circuit breaker***
U-16GE3E5	220 / 230 / 240 V	16 A	U-16GF3E5	220 / 230 / 240 V	16 A
U-20GE3E5		16 A	U-20GF3E5		16 A
U-25GE3E5		16 A	U-25GF3E5		16 A
U-30GE3E5		16 A			

1) Wireless remote controller is also possible. Wireless receivers may be required depending on indoor units.

Hybrid GHP/EHP

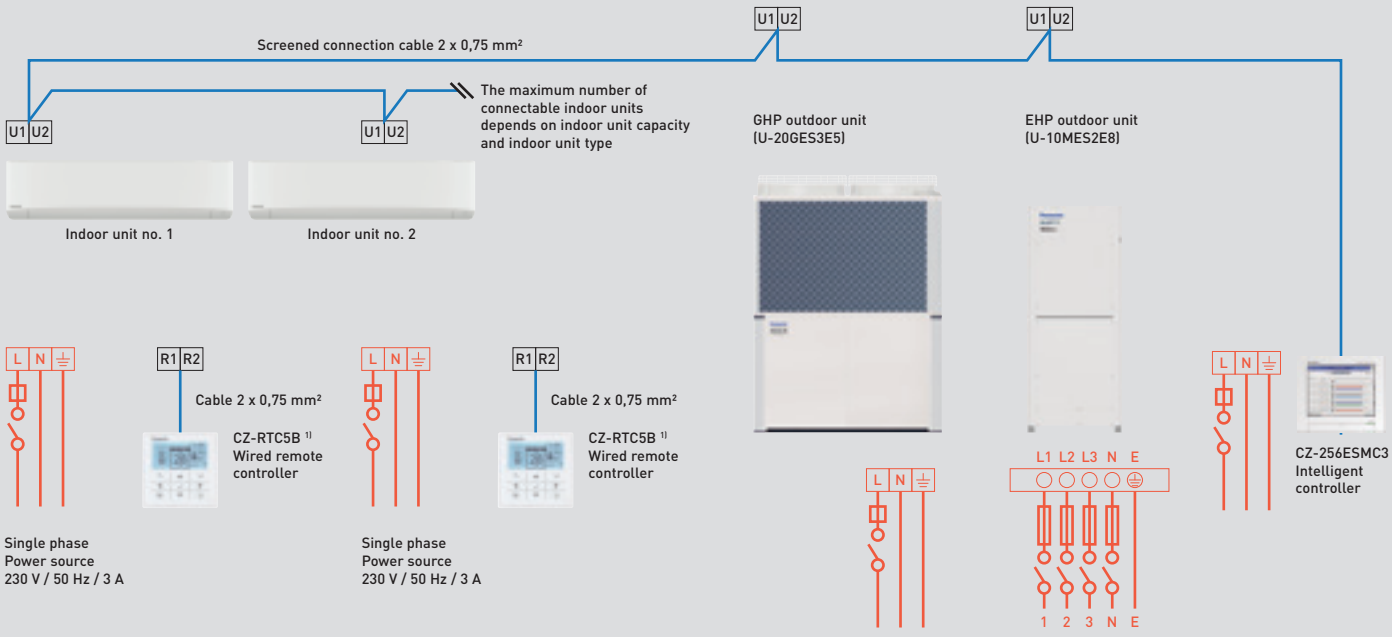

Single phase
Power source
230 V / 50 Hz / 3 A

Single phase
Power source
230 V / 50 Hz / 3 A

Single phase
Power source
230 V / 50 Hz / 15A

Three phase
Power source
3 x 400 V / 1 N ~ 50 Hz / 16 A

1) Wireless remote controller is also possible. Wireless receivers may be required depending on indoor units.

www.aircon.panasonic.eu

heating & cooling solutions

Due to the ongoing innovation of our products, the specifications of this catalogue are valid barring typographic errors, and may be subject to minor modifications by the manufacturer without prior warning in order to improve the product. The total or partial reproduction of this catalogue is prohibited without the express authorisation of Panasonic Marketing Europe GmbH.

www.eggeassociats.net

Do not add or replace refrigerant other than the specified type. Manufacturer is not responsible for the damage and deterioration in safety due to usage of the other refrigerant.
The outdoor units in this catalogue contains fluorinated greenhouse gases with a GWP higher than 150.

Panasonic®

To find out how Panasonic cares for you, log on to: www.aircon.panasonic.eu

Panasonic Marketing Europe GmbH
Délkelet-európai kirendeltség
1117 Budapest, Alíz utca 4. – Office Garden III.

EU-GCAT0320/01